US Army Corps of Engineers

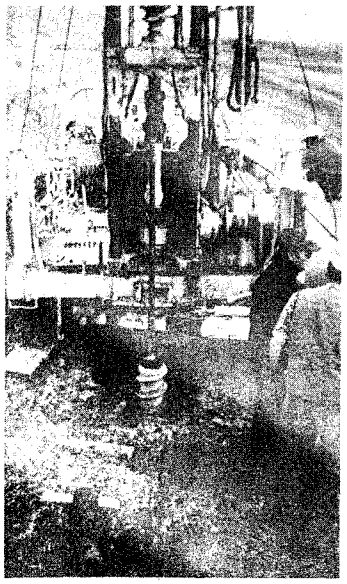

REMR RESEARCH PROGRAM

**REPAIR, EVALUATION, MAINTENANCE, AND REHABILITATION RESEARCH PROGRAM**

# PROCEEDINGS OF REMR WORKSHOP ON NEW REMEDIAL SEEPAGE CONTROL METHODS FOR EMBANKMENT-DAMS AND SOIL FOUNDATIONS

21-22 OCTOBER 1986


Compiled by

Edward B. Perry

Geotechnical Laboratory

DEPARTMENT OF THE ARMY
Waterways Experiment Station, Corps of Engineers
Vicksburg, Mississippi 39180-0631


US ARMY ENGINEER WATERWAYS EXPERIMENT STATION

January 1988

Final Report

Approved For Public Release; Distribution Unlimited


Prepared for DEPARTMENT OF THE ARMY
US Army Corps of Engineers
Washington, DC 20314-1000

Under Work Unit 32310

Destroy this report when no longer needed. Do not return it to the originator.

The findings in this report are not to be construed as an official Department of the Army position unless so designated by other authorized documents.

The contents of this report are not to be used for advertising, publication, or promotional purposes. Citation of trade names does not constitute an official endorsement or approval of the use of such commercial products.

COVER PHOTOS:

TOP - The Hydrofraise, a patented drilling machine developed by Soletanche, used to install a concrete cutoff wall to control seepage at the St. Stephen Powerhouse, Cooper River Rediversion Project, St. Stephen, South Carolina.

BOTTOM - Installing vertical drains, which intersect an existing horizontal drainage blanket for remedial seepage control at Kanapolis Dam, Kansas.

Unclassified

SECURITY CLASSIFICATION OF THIS PAGE

# REPORT DOCUMENTATION PAGE

Form Approved
OMB No. 0704-0188

| | |
|---|---|
| 1a. REPORT SECURITY CLASSIFICATION<br>Unclassified | 1b. RESTRICTIVE MARKINGS |
| 2a. SECURITY CLASSIFICATION AUTHORITY | 3. DISTRIBUTION/AVAILABILITY OF REPORT<br>Approved for public release; distribution unlimited |
| 2b. DECLASSIFICATION/DOWNGRADING SCHEDULE | |
| 4. PERFORMING ORGANIZATION REPORT NUMBER(S) | 5. MONITORING ORGANIZATION REPORT NUMBER(S) |
| 6a. NAME OF PERFORMING ORGANIZATION<br>USAEWES<br>Geotechnical Laboratory<br>6b. OFFICE SYMBOL (If applicable)<br>WESGE-R | 7a. NAME OF MONITORING ORGANIZATION |
| 6c. ADDRESS (City, State, and ZIP Code)<br>PO Box 631<br>Vicksburg, MS 39180-0631 | 7b. ADDRESS (City, State, and ZIP Code) |
| 8a. NAME OF FUNDING/SPONSORING ORGANIZATION<br>US Army Corps of Engineers<br>8b. OFFICE SYMBOL (If applicable) | 9. PROCUREMENT INSTRUMENT IDENTIFICATION NUMBER |
| 8c. ADDRESS (City, State, and ZIP Code)<br>Washington, DC 20314-1000 | 10. SOURCE OF FUNDING NUMBERS<br>PROGRAM ELEMENT NO. / PROJECT NO. / TASK NO. / WORK UNIT ACCESSION NO. 32310 |

11. TITLE (Include Security Classification)
Proceedings of REMR Workshop on New Remedial Seepage Control Methods for Embankment-Dams and Soil Foundations

12. PERSONAL AUTHOR(S)
Perry, Edward B., Compiler

| 13a. TYPE OF REPORT | 13b. TIME COVERED | 14. DATE OF REPORT (Year, Month, Day) | 15. PAGE COUNT |
|---|---|---|---|
| Final report | FROM 10/21/86 TO 10/22/86 | January 1988 | 177 |

16. SUPPLEMENTARY NOTATION A report on the Geotechnical problem area of the Repair, Evaluation, Maintenance, and Rehabilitation (REMR) Research Program. Available from the National Technical Information Service, 5285 Port Royal Road, Springfield, VA 22161.

| 17. COSATI CODES | | |
|---|---|---|
| FIELD | GROUP | SUB-GROUP |
| | | |
| | | |

18. SUBJECT TERMS (Continue on reverse if necessary and identify by block number)

| | | |
|---|---|---|
| Berms | Ground freezing | Jet grouting |
| Blankets | Grouting | Plastic concrete |
| Earth dams | Hydrofraise | Remedial Seepage Control |

19. ABSTRACT (Continue on reverse if necessary and identify by block number)

Presented are the Proceedings of the REMR Workshop on New Remedial Seepage Control Methods for Embankment-Dams and Soil Foundations. The workshop was conducted to stimulate exchange of ideas and information among leading practitioners, and to provide an authoritative review of the state-of-the-art for potential users. The proceedings provide written lecture on grouting, flexible membrane linings, drainage measures, jet grouted cutoff walls, reinforced downstream berms, plastic concrete cutoff walls, and ground freezing. A video tape of the workshop, including the panel discussion, is available from the WES library.

| | |
|---|---|
| 20. DISTRIBUTION/AVAILABILITY OF ABSTRACT<br>☒ UNCLASSIFIED/UNLIMITED ☐ SAME AS RPT. ☐ DTIC USERS | 21. ABSTRACT SECURITY CLASSIFICATION<br>Unclassified |
| 22a. NAME OF RESPONSIBLE INDIVIDUAL | 22b. TELEPHONE (Include Area Code) / 22c. OFFICE SYMBOL |

DD Form 1473, JUN 86 Previous editions are obsolete. SECURITY CLASSIFICATION OF THIS PAGE Unclassified

# PREFACE

The Proceedings of the Repair, Evaluation, Maintenance, and Rehabilitation (REMR) Research Program Workshop, "New Remedial Seepage Control Methods for Embankment-Dams and Soil Foundations," were prepared for the Headquarters, US Army Corps of Engineers (HQUSACE), by the US Army Engineer Waterways Experiment Station (WES).

The workshop was conducted under REMR Work Unit 32310, "Remedial Cutoff and Control Methods for Adverse Conditions in Embankment-Dams and Soil Foundations." The REMR Overview Committee consists of Mr. James E. Crews and Dr. Tony C. Liu, HQUSACE. Mr. Arthur H. Walz, HQUSACE, was Technical Monitor for this work. The REMR Program Manager was Mr. William F. McCleese, Concrete Technology Division, Structures Laboratory, WES.

This workshop was organized by Dr. Edward B. Perry, Soil Mechanics Division (SMD), Geotechnical Laboratory (GL), WES, under the supervision of Mr. Clifford L. McAnear, Chief, SMD, GL, and the general supervision of Dr. William F. Marcuson III, Chief, GL.

COL Dwayne G. Lee, CE, was the Commander and Director of WES at the time of the workshop. Dr. Robert W. Whalin was Technical Director.

CONTENTS


| | Page |
|---|---|
| PREFACE | 1 |
| CONVERSION FACTORS, NON-SI TO SI (METRIC) UNITS OF MEASUREMENT | 3 |
| INTRODUCTION | 4 |
| ATTENDEES | 5 |
| AGENDA | 7 |


PRESENTATIONS - OCTOBER 21-22, 1986


GROUTING FOR GROUND - WATER CONTROL . . . . . 9
Reuben H. Karol

FLEXIBLE MEMBRANE LININGS . . . . . 34
William R. Morrison

REMEDIAL DRAINAGE MEASURES . . . . . 49
Walter C. Sherman

USE OF THE HYDROFRAISE TO CONSTRUCT CONCRETE CUTOFF WALLS . . . . . 61
Jonathan J. Parkinson

JET GROUTED CUTOFF WALLS . . . . . 71
Giorgio Guatteri
Victorio D. Altan

REINFORCED DOWNSTREAM BERMS . . . . . 106
James M. Duncan

PLASTIC CONCRETE CUTOFF WALLS . . . . . 131
George J. Tamaro

GROUND FREEZING AS A CONSTRUCTION EXPEDIENCY FOR EXCAVATING CUTOFF TRENCHES AND/OR INSTALLATION OF DRAINS . . . . . 147
John A. Shuster

BIOGRAPHICAL INFORMATION ON SPEAKERS AND AUTHORS . . . . . 172

## CONVERSION FACTORS, NON-SI TO SI (METRIC) UNITS OF MEASUREMENT

Non-SI units of measurements used in this report can be converted to SI (metric) units as follows:

| Multiply | By | To Obtain |
|---|---|---|
| acres | 4,046.873 | square metres |
| acre-feet | 1,233.481 | cubic metres |
| cubic yards | 0.7645549 | cubic metres |
| Fahrenheit degrees | 5/9 | Celsius degrees or Kelvins* |
| feet | 0.3048 | metres |
| feet per second | 0.3048 | metres per second |
| gallon (US liquid) | 3.785412 | cubic decimetres |
| gallons per minute | 3.785412 | cubic decimetres per minute |
| horsepower (550 ft-lb per sec) | 745.699 | watts |
| inches | 25.4 | millimetres |
| inches per second | 25.4 | millimetres per second |
| miles (US statute) | 1.609347 | kilometres |
| pounds (force) per inch | 175.1268 | newtons per metre |
| pounds (force) per square foot | 47.88026 | pascals |
| pounds (force) per square inch | 6894.757 | pascals |
| pounds (mass) | 0.4535924 | kilograms |
| square feet | 0.9290304 | square metres |
| square yards | 0.8361274 | square metres |
| tons (2,000 lb, mass) | 0.9144 | kilograms |

* To obtain Celsius (C) temperature readings from Fahrenheit readings, use the following formula: $C = (5/9)(F - 32)$. To obtain Kelvin (K) readings, use: $K = (5/9)(F - 32) + 273.15$.

# PROCEEDINGS OF REMR WORKSHOP ON NEW REMEDIAL SEEPAGE CONTROL METHODS FOR EMBANKMENT-DAMS AND SOIL FOUNDATIONS

## INTRODUCTION

The Repair, Evaluation, Maintenance, and Rehabilitation (REMR) Workshop on "New Remedial Seepage Control Methods for Embankment-Dams and Soil Foundations" was held at the US Army Engineer Waterways Experiment Station (WES) on 21-22 October 1986. The workshop was sponsored by REMR Work Unit 32310 entitled "New Remedial Seepage Control Methods for Embankment-Dams and Soil Foundations."

The purpose of the workshop was to stimulate exchange of ideas and information among leading practitioners, and to provide an authoritative review of the state-of-the-art for potential users, primarily those within the federal government.

The workshop was attended by 58 people from the Corps of Engineers, Bureau of Reclamation, Tennessee Valley Authority, Soil Conservation Service, and private organizations. A list of attendees is given on the following page. Presentations were made on grouting, flexible membrane linings, drainage measures, jet grouted cutoff walls, reinforced downstream berms, plastic concrete cutoff walls, and ground freezing. A copy of each written lecture is included in these Proceedings. A video tape of the workshop, including the panel discussion, is available from the WES Library.

## ATTENDEES

REMR Workshop on New Remedial Seepage Control Methods for Embankment-Dams and Soil Foundations

Vicksburg, Mississippi 21-22 October 1986

| Name | Organization | FTS Phone No. | Commercial Phone No. |
|---|---|---|---|
| Herbert C. Albert, Jr. | New Orleans District | None | (504) 862-1003 |
| Leroy Arnold | Little Rock District | 740-5055 | (501) 378-5055 |
| Dwayne Bankofier | NPD | 423-3868 | (503) 221-3868 |
| Timothy L. Beauchemin | NED | None | (617) 647-8365 |
| Dewayne Campbell | BuRec, Denver, CO | 776-6067 | (303) 236-6067 |
| Lawrence H. Cave, Jr. | LMVD | 542-5897 | (601) 634-5897 |
| Robert Chamlee | SAD | 242-6704 | (404) 331-6704 |
| Randy R. Childress | SCS - Jackson, MS | 490-5035 | (601) 965-5035 |
| Edward E. Chisolm | Vicksburg District | 542-5638 | (601) 634-5638 |
| Jerry Christensen | Portland District | 423-6456 | (503) 221-6456 |
| Frank T. Cousin, Jr. | SCS - Ft. Worth, TX | 334-5445 | (817) 334-5445 |
| Erwin Curry | SCS - Jackson, MS | None | (601) 965-4419 |
| Sam K. Darnell | SCS - Jackson, MS | 940-4423 | (601) 965-4423 |
| Charles M. Deaver | Little Rock District | 740-5604 | (501) 378-5604 |
| Harold G. DeShazo | SCS - Jackson, MS | 490-4431 | (601) 965-4431 |
| Clarence Duster | BuRec, Denver, CO | 776-3892 | (303) 236-3892 |
| Marshall Fausold | Pittsburgh District | 722-4123 | (412) 644-4123 |
| Rick Ferguson | Kansas City District | 758-5560 | (816) 374-5560 |
| Ken Graybeal | Seattle District | 466-3712 | (206) 764-3712 |
| Billy P. Hartsell | SCS - Jackson, MS | 490-5191 | (601) 965-5191 |
| Lynn Helms | Vicksburg District | 542-7207 | (601) 634-7207 |
| James B. Hyland | SCS - Ft. Worth, TX | 334-5242 | (817) 334-5242 |
| Ben Kelly | OCE | 272-0207 | (202) 272-0207 |
| M. Kenneth Klaus | Vicksburg District | 542-7122 | (601) 634-7122 |
| Ben J. Letak | Omaha District | 864-4447 | (402) 221-4447 |
| Morris N. Lobrecht | SCS - Ft. Worth, TX | 334-5242 | (817) 334-5242 |

(Continued)

(Concluded)

| Name | Organization | FTS Phone No. | Phone No. |
|---|---|---|---|
| Kevin W. Mahon | NAD | 264-7556 | (212) 264-7556 |
| Leo Mantei | BuRec, Denver, CO | 776-3916 | (303) 236-3916 |
| Danny K. McCook | SCS - Ft. Worth, TX | 334-5444 | (817) 334-5444 |
| Charles H. McElroy | SCS - Ft. Worth, TX | 334-5444 | (817) 334-5444 |
| George J. Mech | Rock Island District | 386-6288 | (309) 788-6361 |
| Chuck Mendrop | Vicksburg District | 542-5208 | (601) 634-5208 |
| Pete Montalbano | Vicksburg District | 542-5627 | (601) 634-5627 |
| Ronald A. Nulton | SCS - Ft. Worth, TX | 334-5242 | (817) 334-5242 |
| Richard L. Peace | SCS - Jackson, MS | 490-5194 | (601) 965-5194 |
| Paul Pettit | Haliburton, Houston, TX | None | (713) 652-6073 |
| George R. Powledge | BuRec, Denver, CO | 776-9326 | (303) 236-9326 |
| George L. Sills | Vicksburg District | 542-5631 | (601) 634-5631 |
| Hari N. Singh | NCD | 353-5733 | (312) 353-5733 |
| Michael Snyder | Baltimore District | 922-4772 | (301) 962-4772 |
| Andrew T. Soule' | Seattle District | 466-3790 | (206) 764-3790 |
| Samuel T. Stacy | Vicksburg District | 542-5635 | (601) 634-5635 |
| David Duane Stagg | Vicksburg District | 542-5644 | (601) 634-5644 |
| Eric Stasch | Omaha District | 864-4446 | (402) 221-4446 |
| Mel Stegall | LMVD | 542-5900 | (601) 634-5900 |
| James W. Stingel | SCS - Chester, PA | None | (215) 499-3940 |
| Hugh Taylor | WESGE | 542-3454 | (601) 634-3454 |
| Eddie Templeton | Vicksburg District | 634-5727 | (601) 634-5727 |
| Robert J. Thomas | Haliburton, Duncan, OK | None | (405) 251-3557 |
| Carl E. Thompson | TVA-Knoxville, TN | None | (615) 632-6897 |
| F. Walberg | Kansas City District | 758-3454 | (816) 374-3454 |
| Bill Walker | Alaska District | None | (907) 753-2683 |
| Frank Weaver | LMVD | 542-5896 | (601) 634-5896 |
| S. Rodney White, Jr. | SCS - Ft. Worth, TX | 334-5242 | (817) 334-5242 |
| Carroll D. Winter | Little Rock District | 740-5603 | (501) 378-5603 |
| Bebe S. Yarbrough | SCS - Jackson, MS | 490-5202 | (601) 965-5202 |
| J. A. Young | LMVD | 542-5509 | (601) 634-5509 |
| Sibte A. Zaidi | Rock Island District | 386-6238 | (309) 788-6361 |

## AGENDA

REMR Workshop on New Remedial Seepage Control Methods
for Embankment-Dams and Soil Foundations
Auditorium, Building 1006
Waterways Experiment Station, Vicksburg, Mississippi

| Tuesday Oct. 21, 1986 | Presentations | Speakers |
|---|---|---|
| 8:30 am | Introduction of LTC Jack R. Stephens, Deputy Commander and Director of WES | Edward B. Perry, WES |
| 8:30 | Welcome | LTC Jack R. Stephens, WES |
| 8:40 | REMR Research Program | William F. McCleese, WES |
| 8:50 | Geotechnical REMR Research Program | Gerald B. Mitchell, WES |
| 9:00 | Introduction of Workshop | Edward B. Perry, WES |
| 9:05 | Introduction of Speakers | Joseph L. Kauschinger Tuffs University |
| 9:10 | Grouting for Ground-Water Control | Reuben H. Karol, Rutgers University |
| 10:10 | Break | |
| 10:30 | Flexible Membrane Linings | William R. Morrison, Bureau of Reclamation |
| 11:30 | Remedial Drainage Measures | Walter C. Sherman, Tulane University |
| 12:30 pm | Lunch | |
| 1:30 | Use of Hydrofraise to Construct Concrete Cutoff Walls | Jonathan J. Parkinson, Soletanche |
| 2:30 | Jet Grouted Cutoff Wall | Giorgio Guatteri, Novatecna Victorio D. Altan, Suelotecnica |
| 3:30 | Break | |
| 4:00 | Reinforcement Downstream Berms | James M. Duncan, Virginia Polytechnic Institute |
| 5:00 | Adjournment | |

| Wednesday Oct. 22, 1986 | Presentations | Speakers |
|---|---|---|
| 8:30 am | Announcements | |
| 8:35 | Plastic Concrete Cutoff Walls | George J. Tamaro, Mueser Rutledge Consulting Engineers |
| 9:35 | Break | |
| 10:00 | Ground freezing as a Construction Expediency for Excavating Cutoff Trenches and/or Installation of Drains | John A. Shuster, Geocentric |
| 11:00 | Panel Discussion * | Joseph L. Kauschinger Tufts University |
| 12:30 | Adjournment | |

* Panel consists of all speakers.

# GROUTING FOR GROUND-WATER CONTROL

Reuben H. Karol
Consulting Engineer
Professor Emeritus, Rutgers University

## Introduction

1. Grouting with cement for control of ground water became an accepted construction procedure in the late nineteenth century in Europe and, at the turn of the twentieth century, in the United States.

2. Chemical grouting became an accepted construction procedure between 1920 and 1930, with the successful completion of field jobs using sodium silicate. The modern era of chemical grouting, which saw the introduction of many new and exotic products for field use, began only 30 to 40 years ago.

3. Procedures and techniques used with cement grouts were developed primarily by the large federal agencies concerned with dam construction; Corps of Engineers, Bureau of Reclamation, and Soil Conservation Service. Predictably, each of these organizations developed its methods unilaterally, resulting in major areas of difference in philosophy and execution.

4. It remains difficult, if not impossible, to assess the effects of these differences on the success of field work. This is partly because each field project is unique, and two similar jobs done by different approaches do not exist. Primarily, however, almost all of the cement grouting is done to increase the safety factor against some kind of failure. There are generally no precise methods of measuring the safety factors before and after grouting, when failure does not occur. By way of contrast, remedial grouting (often done for seepage control) is aimed at a specific problem, where failure or incipient failure on a limited scale is recognizable. Grouting either corrects or fails to correct the problem, and the benefits of grouting, as well as the specific procedures used, are directly measurable.

5. By any reasonable yardstick (volume, cost, man-hours, etc.), the grouting experience of the federal agencies is overwhelmingly in the use of cement. The standard and practices used in cement grouting quite naturally were carried over into chemical grouting usage. Some of these procedures were totally inappropriate and severely limited the success of some of the early

chemical grouting experiences. However, these philosophical difficulties have by now been largely overcome. Chemical grouting is accepted as a valid and valuable construction procedure, and the concepts of short gel times, accurate control of gel times, and sophisticated multipump systems and grout pipes have been integrated into practice.

6. There are two major purposes for grouting, and any field problem can be classified in terms of the desired results of the grouting process: (a) to reduce seepage or to create a barrier against water flow, and (b) to add shear strength to a formation or structure in order to increase bearing capacity, increase stability, reduce settlements and ground movement, and/or immobilize the particles of a granular mass.

7. The term seepage is difficult to define quantitatively. The American Society of Civil Engineers (ASCE) Glossary of Terms states that it is "the flow of small quantities of water through soil, rock or concrete." This definition depends on the interpretation of the word "small." Five gallons per minute (gpm)* of water entering the bottom of a deep shaft is a small amount. The same quantity entering a domestic basement is a large amount. Seepage, then, is better defined in terms of the procedures used to eliminate it, rather than by job or quantity of water involved. Seepage control generally does not require complete grouting of a formation.

8. Creating a barrier against water flow may be done by grouting specific individual flow channels, by constructing a grouted cutoff, or by a grout curtain through some or all of a pervious formation.

## Types of Flow Problems

9. During the construction phase of a project, water inflow is considered a problem (and dealt with) only when the inflow halts or retards construction. However, the same amount of inflow that is tolerable during construction may not be tolerable during operational phase of the structure. Seepage may also begin after construction is completed, because of the elements of the structure that modify the normal ground-water flow, because of faulty construction, because of foundation movements due to consolidation or

---

* A table of factors for converting non-SI units of measurement to SI (metric) units is presented on page 3.

earthquakes, and/or because of ground movements from slope instability. Many times the need for seepage control is recognized in the design stages, and cutoff construction is integrated into the overall construction schedule. However, seepage control procedures are more generally carried out after the structure is completed.

10. Typical seepage problems include infiltration through fissures in rock, through joints and porous zones in concrete, and through pervious soil strata.

## Control of Water Flow

11. If only a limited number of channels are available for water flow, it is feasible and usually preferable to use procedures aimed at individual channels. These are discussed under the heading of "seepage control."

12. If many channels are available for water flow, but flow is occurring only through a few of them, seepage control procedures often result in shifting the water flow from grouted channels to previously dry channels. If, in the end, a large number of channels must be grouted, other procedures will probably be more cost-effective than treating flow channels one at a time.

13. If many flow channels are available and flowing, such as in the case of granular soils or severely fissured rock, procedures are generally used that attempt to impermeabilize a predetermined volume of the formation. These procedures are discussed under the heading "grouted cutoffs."

## Grouting Materials

14. The desirable properties for grouts used for seepage control and for cutoffs are similar. Except for very limited special cases, all of the grouts used must be permanent. They must have adequate strength and imperviousness, and these properties must not deteriorate with age or by contact with ground or ground water. The grouts must have controllable setting times over a wide range, be acceptably nonhazardous to humans and ecology, and be inexpensive enough to be competitive with other construction alternatives. Finally, they must have a low enough viscosity or particle size to permit placement at acceptable economic rates and safe pressures.

15. Figure 1 shows a comparison chart of various ground-water control methods and materials, including commercial grouts. These are plotted against minimum grain size and permeability of granular materials in which the various processes are effective. The data can also be used to define the minimum groutable fissure size for fractured rock or concrete. The limits shown in the chart are approximate, but the relative positions of the processes are reasonably correct.

16. All of the grouts shown have histories of successful field use. The effectiveness of each in terms of penetrability can be evaluated by defining the specific formations to be grouted. All of the grouts shown are considered permanent, except for some of the low concentration silicates. Although the various products differ considerably in strength, all (again, except for some of the low concentration silicates) have adequate strength to resist extrusion from flow channels if placed at pressures greater than the maximum static head at the point of placement. Recent laboratory tests give indication that some of the silicates may not be stable under long-term, high static heads. In a series of tests reported by Krizek and Madden at the April, 1985, ASCE symposium in Denver, Colorado, the behavior pattern shown in Figure 2 was presented. Silicate grouts generally followed patterns 1 and 2. Acrylamides and acrylates followed pattern 3. The report concludes:

a. The polyacrylic grouts AM-9 and AC-400 show no signs of deterioration or erosion due to the application of a gradient of 100. The permeability of specimens injected with these grouts remained constant throughout the tests and appeared to be independent of the curing time allowed prior to testing or the average void size in the soil matrix.

b. Specimens injected with the sodium silicate grouts underwent large variations in permeability during the early stages of testing, but once the permeability stabilized, it remained relatively constant for the remainder of the test. The value at which the permeability stabilized appears to be dependent on the permeability of the ungrouted soil and to a lesser extent on the chemical characteristics of the grout. In general, it appears that at gradients between 50 and 100 the maximum long-term reduction in the permeability of a soil due to the injection of these grouts is one to two orders of magnitude.

c. The amount and rate of grout elutriation appear to be dependent on the strength of the gel and the amount of syneresis experienced in the grout. The polyacrylic and sodium aluminate grouts, which achieve their maximum strength very shortly after gelation and experienced little or no syneresis, showed no sign of grout elutriation when cured for periods of at least 10 and

30 min, respectively. The silicate grouts require several days to achieve their maximum strengths and exhibit reductions of as much as 25 percent of their original volume due to syneresis. Specimens injected with silicate grouts and cured for less than one day experienced rapid, and usually complete, elutriation because of lack of strength. In older specimens the elutriation was a gradual process, and the rate at which the permeability increased was apparently accelerated by increases in the degree of syneresis.

d. For the silicate grouted specimens in which most of the grout was eroded, that grout which remained appeared to be concentrated at the contact points between the soil grains.

e. Extreme caution is recommended when considering the silicate grouts tested in this program for use in situations where they will be subjected to high gradients.

17. All properly placed grouts at time of placement have permeabilities of $10^{-8}$ cm/sec or less. Silicate grouts, within days or weeks after placement, undergo permeability increase, probably due to syneresis, with final permeability in the range of $10^{-4}$ cm/sec. This does not appear to be a serious limitation when grouting granular deposits. When grouting rock fissures, however, syneresis may have serious affects. Recent graduate studies at Rutgers University, of which some results are shown in Figure 3, indicate that the amount of syneresis varies with the catalyst systems (and with other factors) and may approach 40 percent of the grout volume. Thus many of the silicate formulations may not be appropriate for grouting fissures for water control.

18. All of the grouts have controllable setting times. Among the best are acrylamides and acrylates, and among the worst are silicates and phenoplasts. The degree of difference between those described as "best" and those described as "worst" is not sufficient to remove any of them from consideration for field work. All of the grouts pose some degree of hazard to people and ecology. Among the best are the various silicate formulations, and among the worst is acrylamide. Although acrylamide has been used throughout the world since the mid-fifties and continues to be used everywhere except Japan, it has been known for many years that it is toxic and neurotoxic. More recently, laboratory studies by the manufacturers indicate that acrylamide is also carcinogenic. These negative properties obviously forecast a decrease in usage.

19. The grouts that come closest to matching acrylamide's excellent properties are the acrylates. Currently, two commercial products, somewhat

similar in nature, are available in the United States. One of these is AC-400, and the other is Terragel. Typical properties of the commercial grouts are shown in Figure 4. Many of the metallic acrylates can function as chemical grouts. The selection of the ones marketed commercially is based largely on cost, but also on specific properties of the various salts. Since some of the salts will increase in volume when changing from liquid to solid, it is possible to tailor products to specific field requirements. Acrylates have low levels of toxicity and ecological impact and seem to be the best candidates to replace acrylamide.

20. Among the relatively new catalyst systems for silicates is a product called glyoxal. This material has been used in large quantities in Japan in recent years and also in Europe. It has seen little use in the United States, although it is readily available from several sources. It can be used for both low and high concentration silicate solutions, and with or without accelerators, such as calcium chloride. Limited laboratory studies at Rutgers University, some results of which are shown in Figure 5, indicate that glyoxal tends to give much higher stabilized strength than other catalyst systems. However, there appears to be a falloff of strength with time. (This phenomenon also occurs with other catalyst systems.) Glyoxal was not among the materials checked in the report by Krizek and Madden. More extended testing is needed to determine if glyoxal is the catalyst that will permit effective use of silicates for seepage control.

21. The ability of a solid grout, such as cement, to penetrate a fissure or formation is a function of the particle size. A rule of thumb is that formation openings must be at least three times the maximum particle size to prevent rapid blinding of the formation. When normal Portland Cement will not penetrate, high early-strength cement (a more finely ground material) is often used. Although this change is generally effective, the degree of difference is small. Within the past 5 years a new product, Microfine Cement MC-500, has been introduced by Onoda Cement Co. of Japan. The product and its usage were detailed in a paper, which appeared in the proceedings of the New Orleans ASCE Grouting Conference held in 1982. Figure 6 lists some of the physical properties of this product.

22. Manfacturers' data suggest that penetrability of MC-500 is equal to that of acrylamides and acrylates. Laboratory studies at Rutgers University tend to equate MC-500 and the silicates, in regard to penetrability.

23. Cement and silicates are mutual catalysts. Each, in small quantities, can be used to gel the other. MC-500 also follows this relationship. When silicates are used to catalyze MC-500, setting times of a few seconds to several minutes are obtained. When MC-500 is used alone with water, settings times are 4 to 6 hr. No catalyst system has yet been found that will give reliable setting times in the 10-min to 3-hr range. This is a severe drawback, but possibly one that can be eliminated by modifying percentages of the MC-500 components. Currently the cost of MC-500 is high, in the range of the chemical grouts. As the market grows, and other manufacturers compete, costs will decrease significantly.

24. Based on the data presented above, material recommendations for seepage control and cutoff construction are: (a) use Portland Cement wherever feasible, and (b) use MC-500 and the acrylates for field conditions where ordinary cements will not penetrate.

## Grouting Procedures

### Seepage control

25. The earliest studies of seepage control procedures that were fully documented for the profession were performed in 1957 by the author while in charge of Cyanamid's Engineering Materials Research Center. It is probable that the methods developed by these studies had been used as described below or in modified form by others prior to the publication of the results and recommendations. If so, these data remained buried in contractors' files as proprietary information.

26. The initial field work in the 1957 study was performed in a Canadian copper mine, 250 ft below ground surface. This was one of the first applications of grouts other than silicates in mines. Data on fault zone location, such as shown on the drift map in Figure 7, as well as direct visual observation of seepage locations were used to determine placing and direction of grout holes. Grouting through these holes proved to be completely ineffective in reducing seepage. This work indicated clearly that the route grout would follow (from its injection point to its exit point or final location) could not be determined with any accuracy by interpretation of the geologic map coupled with visual site examination. In fact, the complexity of seepage

through a fissured rock mass virtually precludes the effective preplanning of a complete grouting operation.

27. Following the initial mine grouting, a series of laboratory experiments were set up to simulate field seepage conditions. Lucite tubing was used to represent seepage channels and drill holes, as shown in Figure 8.

28. In one experiment, point B was shut and water was pumped through point A at a constant rate until equilibrium was reached. The numbers on the lines in Figure 8 show the percent of total flow going through each line. When the volume pumped through point A was changed and equilibrium again established, the percent of total flow going through each line varied as shown on the table in Figure 8.

29. Other experiments verified the conclusion to be drawn from this one that percent flow was not a direct function of total flow and that the variation was much higher in pipes with low percentage flows than in those with high percentages.

30. It was found after working with any given model under a number of different conditions that sufficient data were available so that the simulated seepage system could be sealed with a preplanned procedure. The required data for any system could be summarized by the following descriptions:

a. The required pumping pressure to fill all the seepage channels with ground-water dilution held to negligible proportions.

b. The time lapse from the start of pumping until the pumped fluid reaches the end of each seepage channel.

c. The volume of pumped fluid required to fill all the channels at the required pumping pressure.

Such data can be obtained only by a pumping test. It cannot be obtained by visual examination even for very simple seepage systems, because the addition of external pumping pressure, which will be required for grouting, changes the characteristics of the seepage system.

31. Lab work and field work both indicate conclusively that when pressure conditions within a seepage system are changed, the very small leaks are much more affected than the large ones. Thus, it should be expected that a field pumping test will reveal leaks which were not flowing under normal static head conditions.

32. The laboratory studies showed that at some point within a seepage system the external fluid pumped mixes with the internal fluid (in field work, this means grout would mix with ground water). At small pumping volumes it

should be expected that somewhere within the seepage system grout will be diluted with ground water to the extent that it will not gel. As the pumping volume is increased, the detrimental dilution will decrease. Under both conditions, the grout tends to flow toward and into that portion of the seepage system farthest from the source of ground water supply.

33. The laboratory studies pointed the way to techniques, refined by field experimentation, which work well in stopping seepage in fractured rock and which are also useful in treating fractured and porous concrete. The technique consists of first drilling a short hole that will intersect water-bearing fissures and cracks. Holes are drilled in the simplest fashion, often by jackhammer. Dry holes are generally worthless and should be abandoned. Wet holes (holes that strike water) are generally useful and are dye-tested as soon as completed.

34. The dye test is done with the grout plant by pumping dyed water through a packer placed at the collar of the wet hole just drilled. The dye concentration must be carefully controlled, so that if ground water dilutes the dye beyond the point where similar dilution would prevent the grout from gelling, the dye cannot be seen. Pumping pressures should be kept well below the pump capacity. If these criteria limit the pumping rate to less than 1 gpm, it may be best to abandon the hole and drill a new one. (The rate noted is approximate and may well vary from job to job. At some low rate for each specific job, it will become economically more feasible to drill new holes to find higher takes rather than to treat tight ones. Job experience will soon dictate which wet holes need not even be tested.)

35. When the dye test begins, the adjacent wall area is carefully watched for evidence of dye. When dye is first seen at any point, the time since the start of pumping is noted as well as the pumping pressure and rate. Dye tests may be stopped when dye appears at one point or may be continued until a number of different locations show dye. (Generally, the points where dye appears are in areas which are already wet or flowing. This is the assumed condition in the discussion which follows. If dye appears only in areas that were dry prior to the dye test, the hole should be abandoned.) For each point, time, pressure, and rate are recorded.

36. Every time dye appears, this indicates that an open seepage channel exists between the packer and the point where dye appears. The exact location of the channel within the rock mass is not known, but if the drill hole being

tested made water, then the established channel must reach into the water source somewhere. Therefore, the hole is worth grouting.

37. The time recorded for the appearance of dye is the maximum gel time that can be used to seal that particular channel. If longer gel times are used, the grout will run out of the leak before it seals. If the time is short, of the order of 5 to 10 sec, this may be too short a gel time to handle readily. The effective time can be lengthened by lowering the pumping rate. This is a necessary step when attempting to seal a number of zones from one hole and one of the zones has a very short return time.

38. If the return time is long, say 5 min or more, it can be shortened by increasing the pumping rate. This will generally raise the pumping pressure and may therefore not be feasible if allowable working pressures would be exceeded. It is usually not productive to treat holes that show return times of 10 min and more when holes with shorter return times are available.

39. Metering pumps are highly desirable for dealing with seepage problems for both the dye tests and the actual grouting. Once a hole has been drilled and tested and it has been determined that grouting is in order, the pump suction lines may be switched directly from the dyed water tanks to the grout tanks. Dye may also be used in the grout, a color different from that used for dye testing.

40. When pumping begins, the pumping volume should be brought as quickly as possible to that used during the tests, and the grout itself should have a gel time of about three quarters of the previously recorded return time. The pumping pressure is monitored to make sure it does not exceed the allowable, but otherwise no attempt need be made at this stage to keep the pressure at dye test values. The leak is watched closely. It should begin to seal at about the recorded return time. If this does not happen and dye (of the color used in the grout) does not appear at the leak, then dilution beyond the ability to gel has occurred. (This would normally mean too high a dye concentration was used in the dye tests.) If dye does appear but the leak does not seal, then dilution of the grout has extended the gel time beyond the return time. This may be counteracted by decreasing the gel time (easy to do with metering equipment but very difficult with equal volume equipment) or by decreasing the pumping rate (easy to do with either kind of equipment).

41. As the leak begins to seal, the pumping pressure will rise, particularly if a single channel is being treated. If the rise is rapid or reaches

high enough values, it will blow out the seal just made and reopen the leak. Therefore, it is important, as the leak begins to seal, to keep the pressure from rising by reducing the pumping rate. It is desirable at this time to continue pumping and, if possible, to place additional grout, since the grout now being pumped is most probably going directly into the source of the seepage. If field conditions and experience offer no clue to the additional volume to be placed, pump an amount equal to that pumped up to the time the leak sealed.

42. Once gel begins forming in the seepage channel, the entire seepage net is altered, and all previously gathered seepage data may become totally unreliable. This is the primary reason why holes should be drilled, tested, and grouted one at a time. For holes which feed more than one leak, considerable change in return times will occur once sealing of one leak begins. For such holes, sealing of additional leaks becomes a trial-and-error proposition, with a good chance of blowing out earlier seals with the higher pressures that may be needed for other leaks.

43. The process described can be readily used to seal one leak or zone at a time, and if the total number of leaking zones is small, the technique is economical for complete seepage control. (Actually, 100 percent shutoff can be obtained for individual leaks but is often not economically feasible for a system with many leaks. For example, it may cost as much to shut off the last 10 percent as it does the first 90 percent of the total seepage.) However, if there are many leaks, the method becomes very time-consuming, and it also becomes necessary to shut off leaks by shutting off the source of seepage. Grout pumped through the hole after all the external leaks have closed is very effective for this purpose. It may be necessary to use cutoff wall procedures.

Curtains

44. Grout curtains are barriers to ground-water flow whose purpose is to restrict or redirect the existing ground-water flow paths sufficiently to limit total water flow to tolerable amounts. A curtain is created by grouting a volume of soil or rock, generally of limited thickness, normal to the existing flow direction. Typically, a grout curtain could be used alongside or underneath a dam to reduce drainage of the impounded water. Curtains may also be placed around construction sites or shafts to reduce water inflow. Where the required service life is of limited duration, well points or other construction methods often prove more practical. For long-term shutoffs,

where the zone to be impermeabilized is close to ground surface, slurry walls are often more cost-effective. Where the treatment is deep or below a structure that cannot be breached, grout curtains remain the most practical solution.

45. The previous discussion of grouting materials is applicable to grout curtains as well as to sealing small seepages. However, grout curtains are generally large jobs in terms of time and materials involved. For large jobs of any kind, there is often economic merit in the use of more than one grout, using a less expensive material for the first treatment (cement, clay, and bentonite should be considered if they will penetrate coarser zones) and following with a (generally) more expensive and less viscous material to handle residual permeability. To date, there has been very limited use of the microfine cements. These products fall in between normal cements and the low viscosity chemical grouts both in penetrability and cost, and depending upon site conditions, they may replace one or both of the other grouts.

46. The pattern for a grout curtain is a plan view of the location of each grout line or row, and every hole in each row. The sequence of grouting each hole should also be noted on the pattern. In order to approach total cutoff, a grout curtain must contain at least three rows of grout holes and the inner row should be grouted last. The distance between rows, as well as the distance between holes in each row, is selected by balancing the cost of placing grout holes against the cost of the volume of grout required. As the spacing between grout holes increases, the required total grout volume increases, but the required linear feet of drilling decreases. For any specific job, the actual costs of drilling and grout can be computed for several different spacings to determine the specific spacing for minimum cost. This generally turns out to be in the 3- to 6-ft range for chemical grouts. For the microfine cements, optimum spacing will fall in the same range.

47. Grout curtains placed with normal cement grout have in the past used much larger hole spacings to begin with (10 to 30 ft), and have used a technique of splitting the spacing one or more times while grouting to a refusal pressure or volume. Thus, holes placed at a 20-ft spacing to begin with may be cut to a 10-ft spacing, then 5 ft, then 2 1/2 ft, etc. This process, which requires a lot of drilling, is based on the fact that cement grouts, as generally used, will have long setting times in the field, several hours or more. When working with cement as the major grout, hole spacing

should start at 10 ft or more if microfine cements or chemical grouts will not be used, or will be used only in the center row of holes. If normal cements are to be used at the start of a chemical grout curtain primarily to plug large voids, the spacing of grout holes should be that applicable to a chemical grout curtain.

48. The length of a grout curtain is often determined by the physical parameters of the job. A cutoff between two foundations obviously has a length equal to the distance between them. A grout curtain on one side of a dam, however, need not extend indefinitely or to the closest impervious formation. Such curtains function by extending the otherwise short flow paths far enough so that flow is reduced to tolerable amounts. The length may be extended to where more permeable zones terminate or may be designed on hydraulic principles alone.

49. The depth of a grout curtain is determined by the soil profile. Unless the bottom of the curtain reaches relatively impervious material, the curtain will be ineffective if shallow, and very expensive if deep.

50. When a grout curtain is built for a dam prior to the full impounding of water behind the dam, there may be no way to evaluate performance of the curtain for a long time after its completion. Even when performance can be evaluated quickly, there is often no way to relate poor performance to faulty construction opening or "windows" in the curtains which were not grouted. Thus, complete and detailed records are vital for each grout hole. These will indicate the location of probable windows and permit retreatment of such zones while grouting is still going on.

51. In contrast to the seepage problems previously discussed, grout curtains cannot economically be constructed by trial and error in the field. The entire program of grouting must be predesigned, based on data from a geological investigation and an adequate concept of anticipated performance.

52. The first step in the design of a grout curtain is the spatial definition of the soil or rock volume to be grouted. The design then defines the location of grout holes and the sequence of grouting. For each hole the volume of grout per lineal foot of hole is determined, based on the void volume and the pipe spacing, to allow sufficient overlap between grouted zones. The intent is to form a stabilized cylinder of a desired specific diameter along

the length of pipe. The diameter is selected so that stabilized masses from adjacent grout holes will be in contact with each other, and overlap slightly.

53. In practice, it is difficult to synchronize the pumping rate and pipe pulling (or driving) rate to obtain a uniform grout placement rate along the pipe length. It is common practice to pull (or drive) the pipe in increments and hold it in place for whatever length of time is required to place the desired volume of grout. If small volumes of grout are placed at considerable distances apart, the obvious result is isolated stabilized spheres (or flattened spheres). As the distance between placement points decreases, the stabilized masses approach each other. The stabilized masses will also approach each other, if the distance between placement points remains constant but grout volume increases. Experiment and experience have shown that the chances of achieving a relatively uniform cylindrical shape are best when the distance the pipe is pulled between grout injections does not exceed the grout flow distance normal to the pipe. For example, if a stabilized cylinder 5 ft in diameter is wanted, in a soil with 30 percent voids, 45 gal of grout are needed per foot of grout hole. The pipe should not be pulled more than 30 in. At 30-in. pulling distance, 112 gal should be paced. (The grouting could also be done by injecting 77 gal at 18-in. intervals, etc.)

54. Even when the proper relationship between volumes and pulling distance is observed, nonuniform penetration can still occur in natural deposits when these are stratified. Degrees of penetration can vary as much as natural permeability differences. Such nonuniformity has adverse effects on the ability to carry out a field grouting operation in accordance with the engineering design.

55. It would be of major value to be able to obtain uniform penetration regardless of permeability differences in the soil profile. In assessing the cause for penetration differences, it becomes apparent that the grout which is injected first will seek the easiest flow paths (through the most pervious materials) and will flow preferentially through those paths. To modify this condition, other factors must be introduced. If the grout were made to set prior to the completion of the grouting operation, it would set in the more open channels where it had gone first and force the remaining grout to flow into the finer ones. Accurate control of gel time thus becomes an important factor in obtaining more uniform penetration in stratified deposits. Just as in controlling the detrimental effects of ground-water flow, more uniform

penetration in stratified deposits also requires keeping gel times to a minimum.

56. The operating principles can be summarized as follows:

a. The pipe pulling distance must be related to volume placed at one point.

b. The dispersion effects of gravity and ground water should be kept to a minimum.

c. Excess penetration in coarse strata must be controlled to permit grouting of adjacent finer strata.

57. The first criterion requires only arithmetic and a knowledge of soil voids. Isolated stabilized spheres will result if the distance the pipe is pulled between injections is greater than the diameter of the spheres formed by the volumes pumped. Graphic trials at decreasing pipe pulling distances readily show that the stabilized shape begins to approach a cylinder as the distance the pipe is pulled approaches the radial spread of the grout as discussed previously.

58. The second criterion requires that grout be placed at a substantially greater rate than the flow of ground water past the placement point and that the gel time does not exceed the pumping time. In the formations where chemical grouts would be considered--those too fine to be treated by cement, pumping rates more than 1 gpm are adequate to prevent dispersion under laminar flow conditions. (Turbulent flow does not occur in such soils other than at surfaces exposed by excavation). The control of gel times not to exceed the pumping time is readily done with dual pumping systems but is difficult and frustrating with batch systems.

59. The third criterion requires that the gel time be shorter than the pumping time. (The alternative is to make additional injections in the same zone after the first injection has set. This would require additional drilling and would certainly be more costly). This process is feasible with chemical grouts but obviously cannot work with a batch system. Dual pumps and continuous catalysis are required.

## Summary

60. Controlling seepage or flow through subsurface channels requires plugging the channels individually or collectively. Grouts are often used for these purposes. Cements, including the new microfine products, and acrylates

are the materials most suitable, considering cost, toxicity and gel time control. Field procedures for seepage control and curtain grouting differ greatly, but each method works most effectively when used with short gel times.

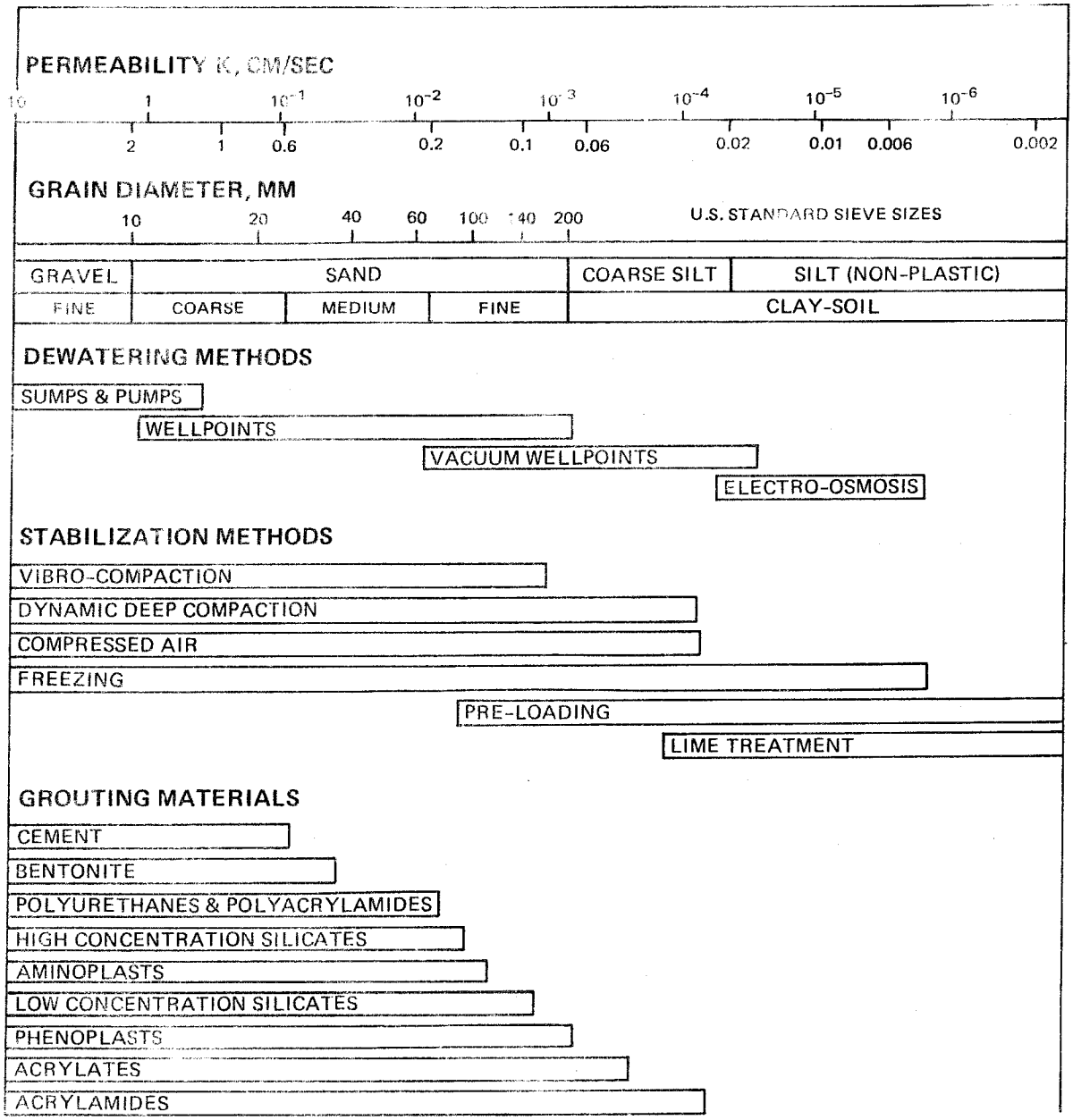


Figure 1. Ground-water control methods

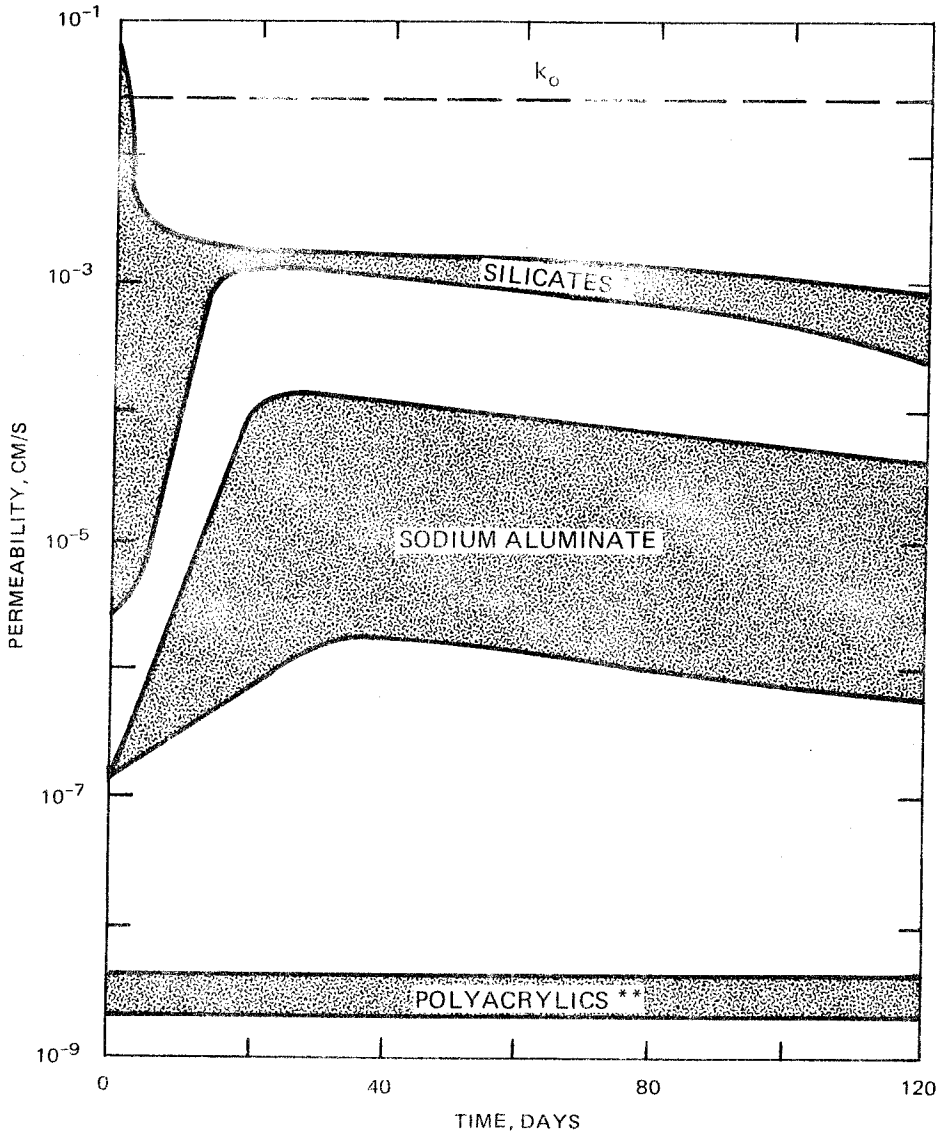


* INCLUDES HARDENER 600, GELOC-4, TERRASET, AND ETHYL ACETATE/FORMAMIDE GROUTS

** INCLUDES AM-9 AND AC-400

Figure 2. Permeability versus time

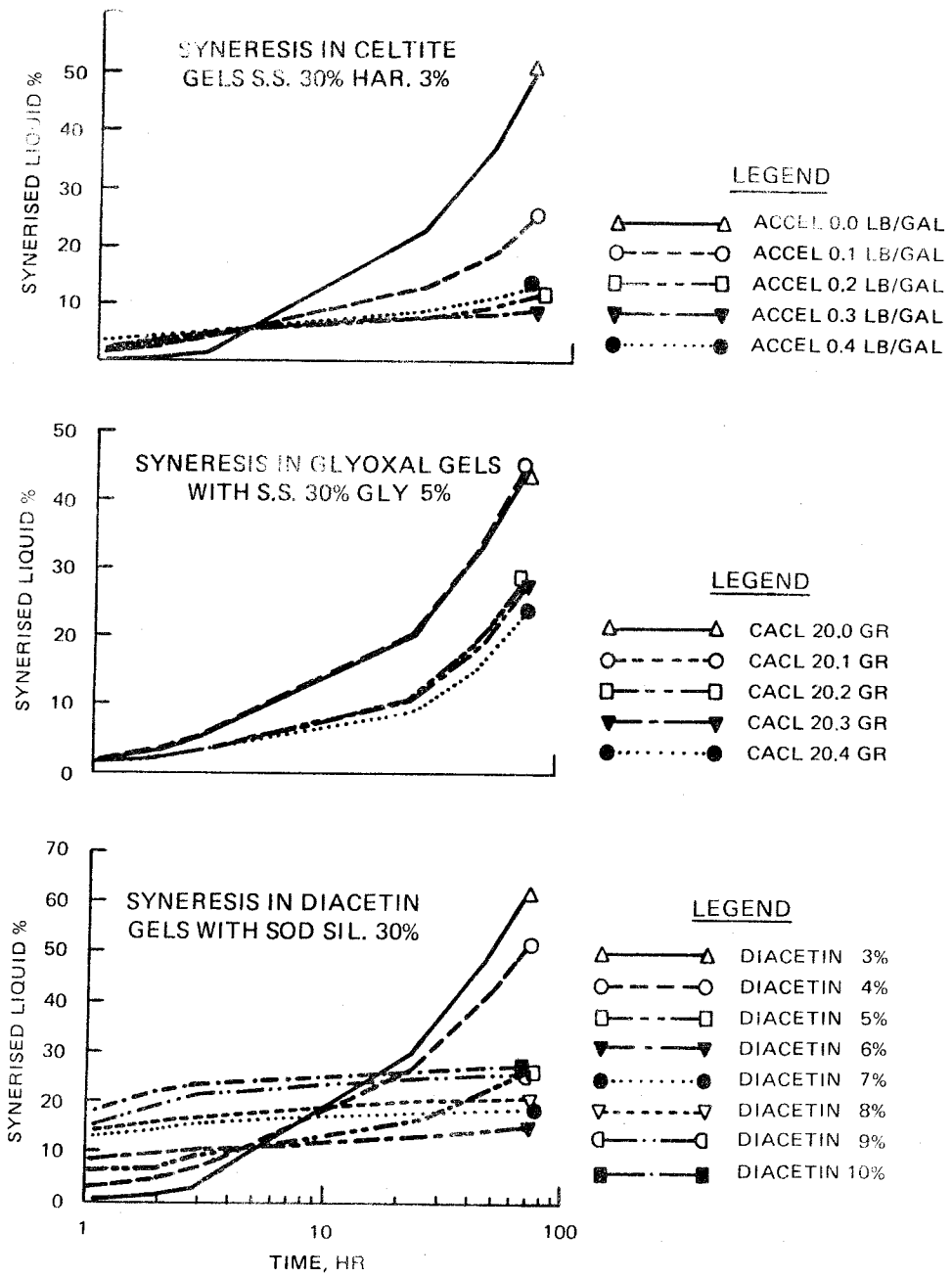


Figure 3. Syneresis of some sodium silicate grouts

## PROPERTIES OF CONCENTRATED GROUT

THE NEW GROUT CONSISTS OF A MIXTURE OF ACRYLATE MONOMERS IN WATER SOLUTION WITH THE FOLLOWING PROPERTIES:

| | |
|---|---|
| APPEARANCE | STRAW YELLOW COLOR |
| DENSITY | 9.8 LBS/GAL (1.18 GM/ML) |
| STABILITY | GOOD |
| PERCENT SOLIDS | 38 - 42% |
| pH | 6.5 - 7.5 |

THE GROUT HAS GOOD STORAGE STABILITY BUT SHOULD BE KEPT ABOVE ITS FREEZING POINT - 4° F (-20° C) AND BELOW 100° F (38° C). IT CANNOT BE STORED IN CONTACT WITH STEEL.

## PROPERTIES OF GROUTING SOLUTION

AC-400 GROUTING SOLUTION CONTAINS 10 PERCENT MONOMER SOLIDS AND SUFFICIENT ACCELERATOR (TEA) AND INITIATOR (AP) TO GIVE THE REQUIRED GEL TIME. THE PROPERTIES OF A TYPICAL GROUTING SOLUTION FOLLOWS:

| | |
|---|---|
| VISCOSITY | 2 CPS (20° C, 50 RPM, BROOKFIELD) |
| DENSITY | 8.6 LBS/GAL (1.04 GM/ML) |
| pH | 7.5 - 9.5 |
| STABILITY | 3 DAYS CATALYZED |

## PROPERTIES OF ACRYLATE GELS

THE LONG, FLEXIBLE, CROSSLINKED POLYMER CHAINS OF ACRYLATE GEL AT 10 PERCENT SOLIDS IN WATER HAVE THESE PROPERTIES:

| | |
|---|---|
| APPEARANCE | WHITE, FLEXIBLE GEL |
| SOLUBILITY | INSOLUBLE IN WATER, KEROSENE, GASOLINE. THE GEL WILL SWELL SLIGHTLY IN THE PRESENCE OF WATER. |
| PERMEABILITY | $5 \times 10^{-9}$ CM/SEC |
| STABILITY | UNDER CONDITIONS THAT ALLOW WATER TO EVAPORATE, GEL WILL GRADUALLY DEHYDRATE. IN UNDERWATER OR AT 100 PERCENT RELATIVE HUMIDITY (CONDITIONS UNDERGROUND), THE GEL WILL MAINTAIN ITS VOLUME FOR YEARS. THE GEL IS RESISTANT TO ATTACK BY BACTERIA, FUNGI AND THE DILUTE CHEMICALS THAT MAY BE FOUND UNDERGROUND. |
| LONGEVITY | BECAUSE OF THE PERMANENCE OF ACRYLATE POLYMERS IN SOILS AND THE SIMILARITY BETWEEN ACRYLAMIDE MONOMER AND ACRYLATE MONOMER POLYMERIZATIONS, IT IS BELIEVED THAT AC-400 GEL WILL REMAIN UNAFFECTED FOR MANY YEARS IN SOILS. |

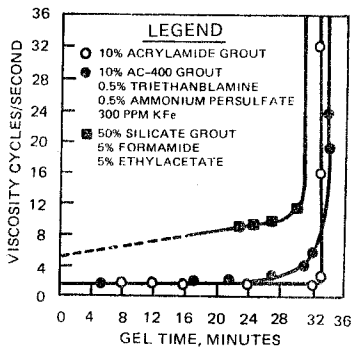


THE CHEMICAL GROUT CONSISTED BY WEIGHT OF 25 PERCENT LIQUID GROUT CONCENTRATE, 0.3 PERCENT TRIETHANOLAMINE AND 0.3 PERCENT AMMONIUM PERSULFATE; THE BALANCE WAS WATER. THIS GROUT MIX GAVE A 10 MINUTE GEL TIME AT 15° C.

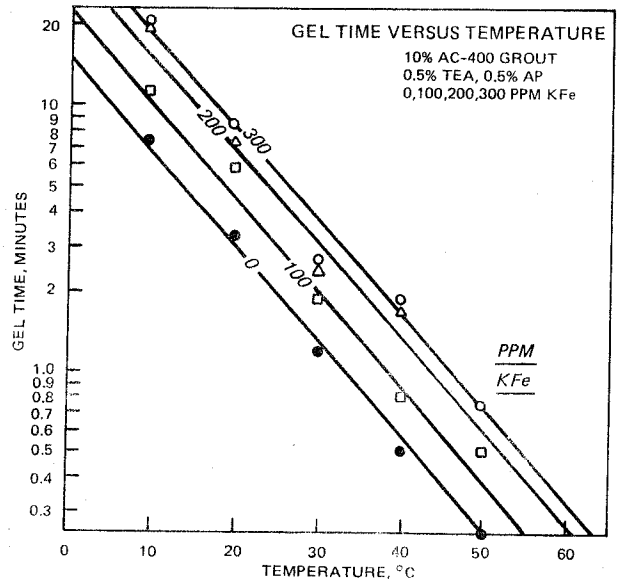


Figure 4. Properties of acrylate grout

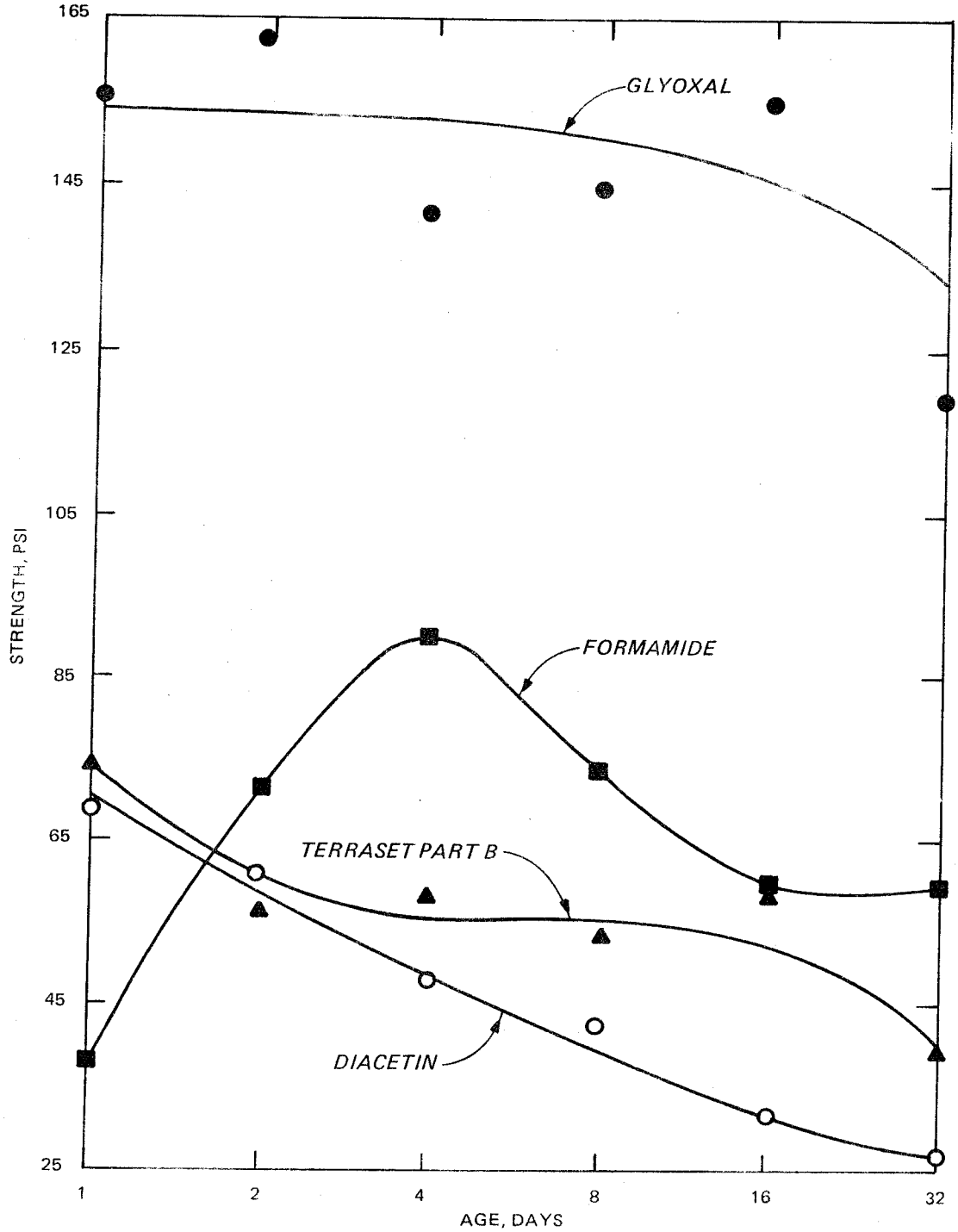


Figure 5. Strength versus age analysis of glyoxal, diacetin, formamide, and terraset Part B

MC-500 MICROFINE CEMENT

CHEMICAL COMPOSITION (%)

| IG LOSS | $SiO_2$ | $Al_2O_3$ | $Fe_2O_3$ | CAO | MGO | $SO_3$ | TOTAL |
|---|---|---|---|---|---|---|---|
| 0.4 | 30.6 | 12.4 | 1.1 | 48.4 | 5.8 | 0.8 | 99.5 |

PHYSICAL PROPERTIES

| | | |
|---|---|---|
| APPEARANCE | | LIGHT-GRAY POWDER |
| SPECIFIC GRAVITY | | 3.00 + 0.10 |
| UNIT WEIGHT (KG/ℓ) (APPARENT BULK DENSITY) | | 1.00 + 0.10 |
| ODOR | | NONE |
| FINENESS | BLAINE SPECIFIC AREA ($CM^2/G$) | ABOUT 8000 |
| | 50 PERCENT GRAIN SIZE ($\mu M$) | ABOUT 4 |

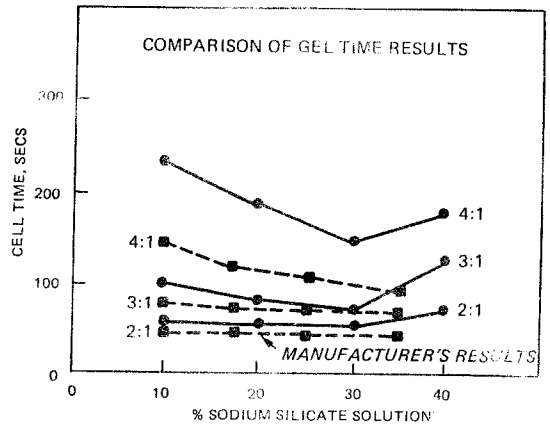


GRADATION CURVES FOR MC-500 AND CEMENTS

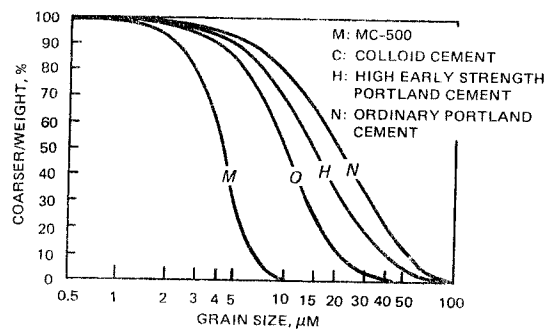


| | BLAINE (CM2/G) | COARSER THAN 20 MICRONS BY WEIGHT (%) |
|---|---|---|
| M | 8150 | 0.0 |
| C | 6270 | 12.7 |
| H | 4320 | 36.2 |
| N | 3170 | 52.9 |

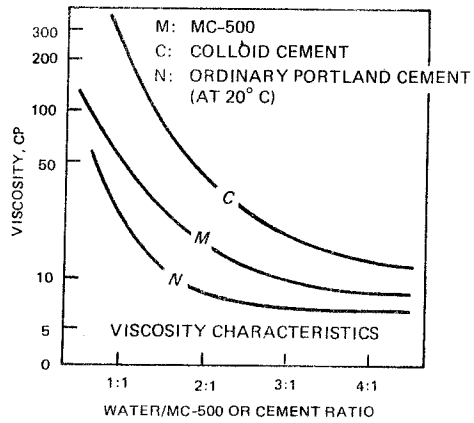


Figure 6. Properties of MC-500 grout (Continued)

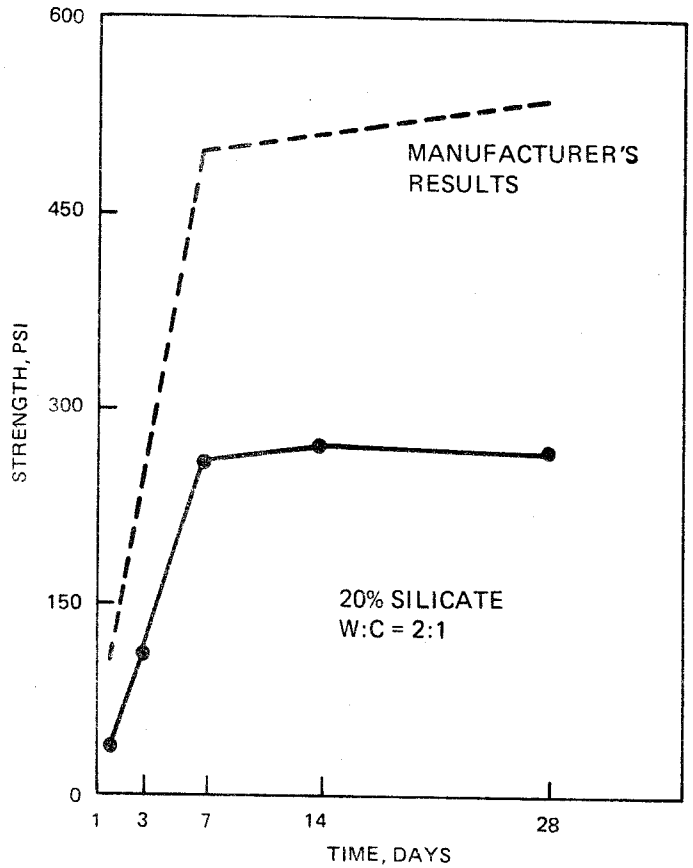


COMPARISON OF RESEARCH RESULTS AND MANUFACTURER'S DATA FOR UNCONFINED COMPRESSIVE STRENGTH

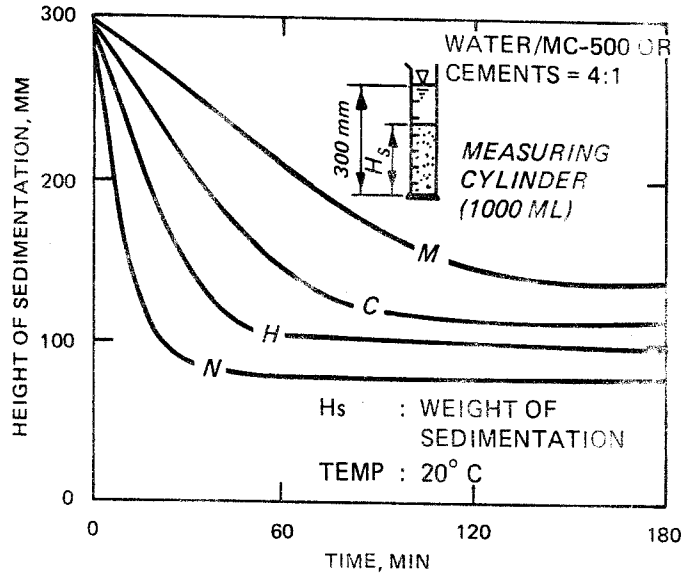


M : MC-500
C : COLLOID CEMENT
H: : HIGH EARLY STRENGTH PORTLAND CEMENT
N : ORDINARY PORTLAND CEMENT

SEDIMENTATION CHARACTERISTICS OF WATER-CEMENT SLURRIES

Figure 6. (Concluded)

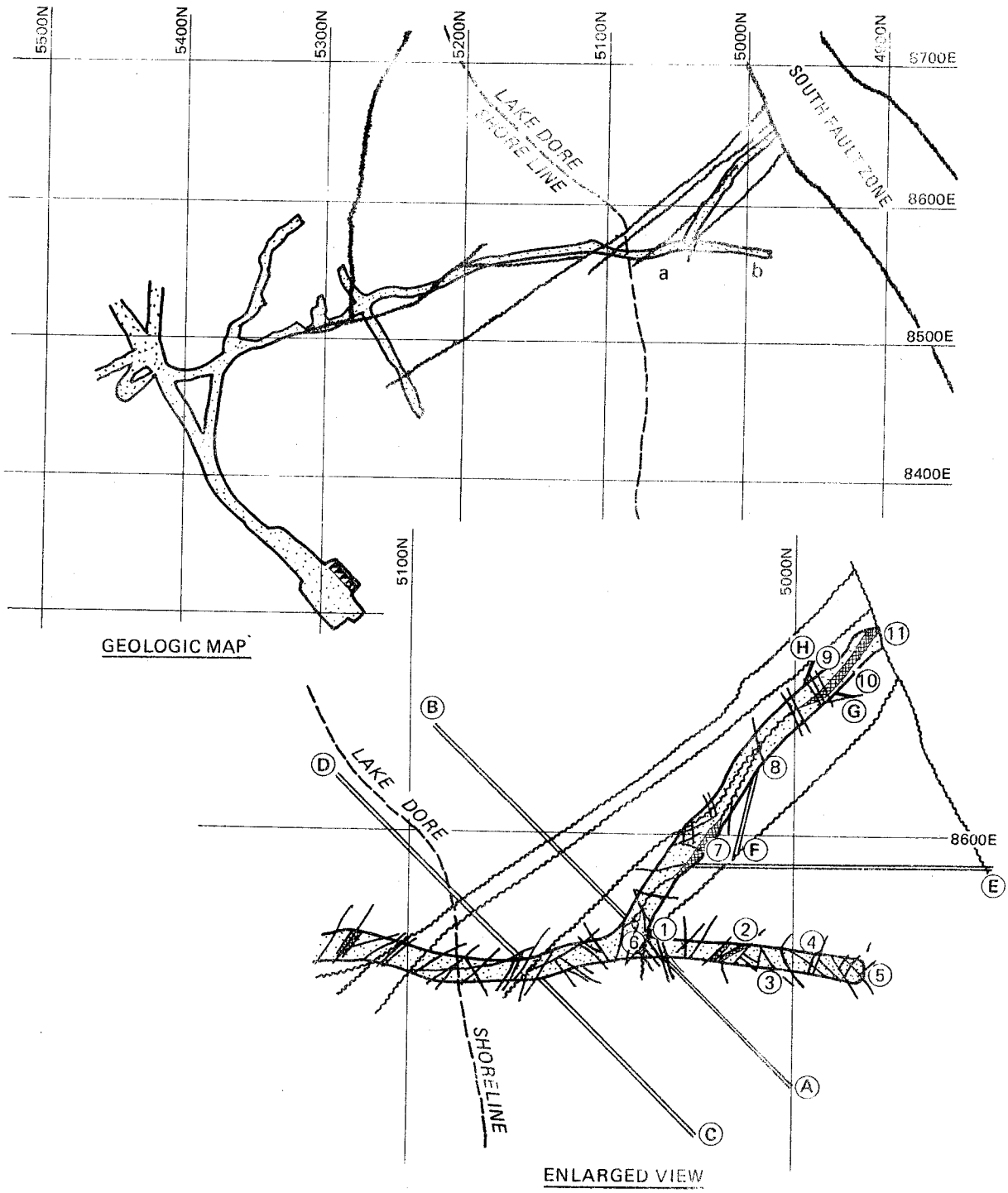


Figure 7. Geologic map at 250-ft level

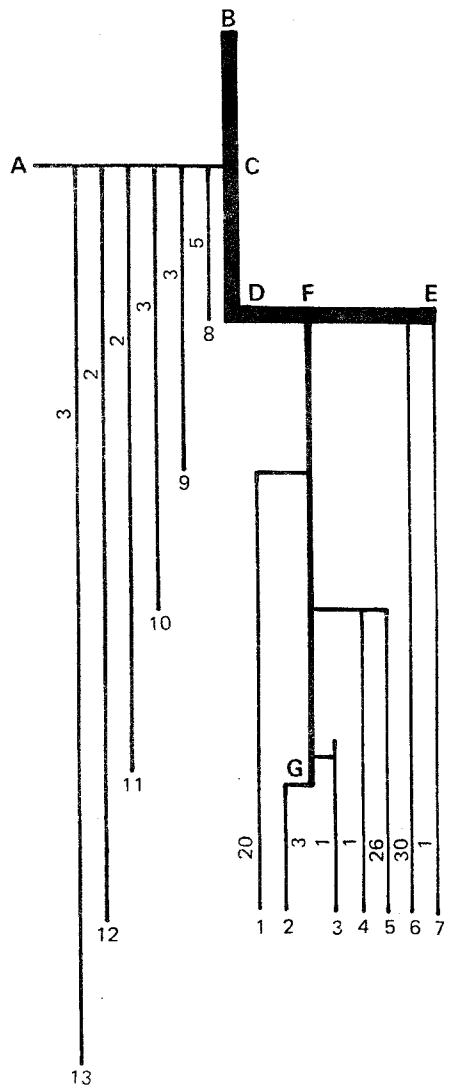


TWO-MINUTE FLOW-THROUGH MODEL

| PIPE NO. | cc | % | cc | % |
|---|---|---|---|---|
| 1 | 305 | 20- | 169 | 20+ |
| 2 | 43 | 3- | 22 | 3- |
| 3 | 21 | 1+ | 8 | 1- |
| 4 | 15 | 1 | 9 | 1+ |
| 5 | 395 | 26- | 232 | 28+ |
| 6 | 455 | 30+ | 210 | 26- |
| 7 | 12 | 1- | 5 | 1- |
| 8 | 78 | 5 | 44 | 5+ |
| 9 | 48 | 3 | 32 | 4- |
| 10 | 46 | 3 | 37 | 4+ |
| 11 | 35 | 2+ | 20 | 2+ |
| 12 | 34 | 2+ | 7 | 1- |
| 13 | 39 | 3- | 33 | 4 |
| TOTAL FLOW | 1526 | | 828 | |

Figure 8. Seepage model and data

# FLEXIBLE MEMBRANE LININGS

by William R. Morrison
Bureau of Reclamation

## Background

1. Since the end of World War II, the rapid development of synthetic polymers has made a host of new construction materials available. In cooperation with industry, the Bureau of Reclamation has conducted extensive laboratory and field research on many of these synthetic materials engineered specifically for use as waterproof membrane linings. This work has led to the development of FML's (flexible membrane linings) for seepage control in irrigation canals, reservoirs, and ponds. As a result of this development, there has been an increased use of FML's in dam construction.

2. The FML's are thin, tough, impermeable plastic or elastomeric films ranging in thickness from 10 to 100 mils (1 mil equals 0.001 in.). The term "geomembrane" has recently been coined for FML's.

3. The most common membrane linings include the following materials:

   a. PVC (polyvinyl chloride).

   b. LDPE (low-density polyethylene). This plastic is the type used in manufacturing trash bags, such as Hefty and Glad. For comparative purposes, trash bags range in thickness from 1-1/2 to 2 mils. Also, LDPE is quite often called "Visqueen."

   c. HDPE (high-density polyethylene).

   d. CPE (chlorinated polyethylene).

   e. CSPE (chlorosulfonated polyethylene). This material is also called Hypalon, which is Dupont's trade name for the compound.

   f. Butyl rubber.

   g. EPDM (ethylene propylene diene monomer).

Some of these linings (d through g) can be manufactured with a reinforcing scrim to improve tear strength properties and dimensional stability (shrink resistance).

## Canal Linings

4. Much of the development work on plastic canal linings has been accomplished under the Bureau's LCCL (Lower Cost Canal Lining) program,

terminated in 1967, and its replacement, the OCCS (Open and Closed Conduit Systems) program.

5. The use of the plastic linings has primarily been in conjunction with the rehabilitation of old, unlined canals, especially in areas unsuitable for compacted earth or concrete linings. This work involving the procedures listed below is generally accomplished during the nonirrigation season, and it often involves wintertime construction.

a. Excavation of the existing canal a minimum of 1 ft.

b. Subgrade preparation.

c. Installation of the membrane lining.

d. Placement of an earth cover (12 to 18 in. in depth) to protect the membrane from the elements and physical damage.

6. Because of the requirement of an earth cover, membrane linings are restricted to canals having low-velocity flows (1 to 3 ft/sec). Also, the side slopes should be no steeper than 2.5:1 and preferably 3:1. Several excellent articles have been prepared recently concerning slope stability of membrane-lined facilities (Giroud and AH-Line 1984, Martin and Koerner 1985).

7. Either PVC or LDPE can be used in plastic canal lining work. The decision to use PVC or PE (polyethylene) is made on the basis of local conditions and service requirements for each specific installation. Because PVC is more resistant to punctures, more readily available in larger sheets (up to 70 ft wide and 1,000 ft long, depending upon thickness), and more easily repaired and field spliced with solvent-type cement, it has been used more extensively than PE in Bureau work.

8. Although PE possesses better low-temperature properties and aging characteristics than PVC, it is more difficult to handle and currently is available only in seamless rolls up to 40 ft wide and 200 ft long. Consequently, it requires more field seams. These shortcomings have recently been discussed with United States manufacturers of PE film.

9. The first PVC installation under Bureau construction specifications was in 1968, on the Helena Valley Canal, Helena Valley Unit, Montana. Since then, PVC has been used in rehabilitation work on the East Bench Unit, Montana; Riverton Unit, Wyoming (Wilkinson 1984); Farwell Unit, Nebraska; and the Yakima Project, Washington.

10. For this work, PVC of 10-mil (0.01 in.) thickness was used. However, based on field and laboratory performance studies conducted the past few

years, 20-mil PVC is now being specified in Bureau work. The additional cost of the heavier gauge material will be minimal. With a 100 percent increase in thickness of the membrane, the overall cost of construction will only increase by about 15 percent.

11. Plastic linings are now being specified for new construction. For example, a 20-mil PVC is being used on the San Luis Project, Colorado, to line a conveyance channel for delivering salvaged ground water as a supplemental source to the Rio Grande River. Three of four specifications have been issued and awarded for this work. The installation on the San Luis Project is the largest use to date of a plastic lining in canal construction in the United States (Starbuck and Morrison 1984; Morrison 1985).

12. In 1984, a study was completed (Morrison and Starbuck 1984) on the performance of buried plastic membrane linings, primarily 0.25-mil-thick PVC, used for seepage control in Bureau irrigation canals. Samples from nine canal installations ranging in service life from 1 to 19 years were evaluated. Results of the study indicate that plastic linings are providing satisfactory service for seepage control and are viable alternatives in areas not suitable for concrete or compacted earth linings. Results of the study indicated that some stiffening of the PVC has occurred with time. This stiffening or aging is caused by the loss of plasticizer, the agent used in the manufacturing of the lining to impart flexibility. The rate of this aging is primarily dependent on three factors:

a. Source - linings originally manufactured with a high plasticizer content exhibited less aging,

b. Location - samples obtained from within the water prism exhibited less aging than those obtained outside the prism, and

c. Subgrade preparation.

13. From 1975 to 1982, the Bureau was involved in a joint study with the Soviet Union on the use of plastic films for canal linings. Highlights of this study included the following:

a. Exchange of technical information on plastic linings used in both countries. (The Soviets primarily use PE in their canal construction work. In small canals, they use 8-mil PE under concrete, and in larger canals, they use two layers of 8-mil film covered with about 3 ft of earth in the bottom and precast concrete slabs on the side slopes at the waterline for erosion control.)

b. Installation of nine experimental canal lining systems at the Ukranian Field Test Station, Black Sea Canal. The Soviets

constructed the test sections in accordance with Bureau specifications and using Bureau-furnished materials. Based on the results of these tests, two lining systems have been selected for further study in an operating canal on the Kakhovka Project in the Ukraine. The two systems are a 10-mil PVC with a concrete cover and a 20-mil polyolefin lining with a concrete cover.

c. Installation of a PE and a PVC study section on the Amarillo Canal, Navajo Indian Irrigation Project, New Mexico. Included in the study will be determination of the performance of several different protective earth cover materials. Special seepage monitoring stations were also installed to determine the effectiveness of the plastic linings for seepage control.

An interim report (Krupin et al. 1982) was prepared, summarizing the joint studies to date.

## Dam and Reservoir Applications

### General

14. The Bureau has been involved in three major projects using flexible membrane linings: The Kualapuu Reservoir, Molokai Project, Hawaii, the Mt. Elbert Forebay Reservoir, Fryingpan-Arkansas Project, Colorado, and the San Justo Reservoir, Central Valley Project, California.

### Kualapuu Reservoir

15. The Kualapuu Reservoir, built during 1968-1969, is the principal storage facility for the Molokai Project, Hawaii. This is a State venture that is federally funded in part under the Small Reclamation Projects Act of 1956. The storage capacity of the reservoir is 4,300 acre-ft, with a maximum head of 50 ft (Chuck 1970).

16. Since onsite clay materials were borderline in regard to satisfactory seepage control, a 1/32-in. nylon-reinforced butyl runner lining was installed in the reservoir to control seepage. The Bureau provided technical assistance for this 160-acre installation.

17. Bureau O&M (Operation and Maintenance) personnel have made periodic inspections of the reservoir. They report that occasional repairs of the seams have been required. Also, slope protection material has been placed at the waterline to minimize damage from wind and wave action.

Mt. Elbert Reservoir

18. General. During the summer of 1980, the Bureau installed 290 acres of a flexible membrane lining in Mt. Elbert Forebay Reservoir (Morrison, et al. 1982). The reservoir, part of the Mt. Elbert pumped-storage facility, is situated on the north shore of picturesque Twin Lakes located in Lake County approximately 15 miles southwest of Leadville, Colorado.

19. The reservoir impounds 11,530 acre-ft of water of which 7,160 acre-ft is used to develop 200,000 kw of electrical power during peak demand. Two 138,000-hp hydroelectric turbine-generators are used to generate the power. These generators have also been designed to operate as 170,000-hp motors to drive the turbines in reverse to pump the water from Twin Lakes, back to the forebay reservoir during nonpeak hours.

20. The installation at Mt. Elbert constitutes the world's largest single-cell flexible membrane lining application to date, and it is the first time that such a material has been used in a pumped-storage reservoir for seepage control. Also, to meet the Bureau deadline of July 1, 1981, for power on-line, the installation had to be accomplished in one construction season to allow sufficient time to fill the reservoir and conduct acceptance tests on the generating units and other accessory equipment.

21. The membrane lining was installed under Bureau Specifications No. DC-7418. Green Construction Company of Des Moines, Iowa, was awarded the contract on April 16, 1980, and installation of the membrane was completed on September 20, 1980. The B. F. Goodrich Company of Akron, Ohio, was the subcontractor who furnished and installed the membrane lining. The cost of the work is shown below:

| Item | Engineer's estimate | Bid price |
|---|---|---|
| Total | $20,566,000 | $17,884,170 |
| Furnish and install membrane lining | $10,160,000 ($0.80/ft$^2$) | $ 8,712,200 ($0.686/ft$^2$) |

22. Forebay reservoir. At an elevation of 9,645 ft, the forebay reservoir is approximately 435 ft above the Mt. Elbert pumped-storage power plant. The bulk of the water used for power generation must be pumped into the

forebay reservoir from lower Twin Lakes, one of a pair of glacial-age lakes. The capacity of the lakes has been increased by construction of an embankment dam at the outlet end of the lower lake. Additional water for power production comes from the western slope of the Continental Divide. The north side and south side Collection System on the western slope collects runoff from snowmelt above 10,000 ft. The water is brought to the eastern slope via tunnel to Turquoise Reservoir where it is held in temporary storage until conveyed through the 10.3-mile-long Mt. Elbert conduit to the forebay reservoir.

23. The forebay reservoir has a surface area of 290 acres at an elevation of 9,645.7 ft, the top of active conservation capacity. The minimum operational water surface is at an elevation of 9,615 ft. Adjacent to the upper edge of the glacial scoured valley now occupied by Twin Lakes Reservoir, the forebay reservoir occupies a former topographic depression. The reservoir was built in 1976-1977 by constructing a small dike in the open southwest corner of the depression and a 90-ft-high zoned earth embankment across the open north side. The earth materials in the floor and sides of the depression varied from sandy clay to pervious sands and gravels. The depression was reshaped to provide a bottom shape suitable for placement of a 5-ft-thick earth liner.

24. The earth lining extended up the sides of the reservoir to an elevation of 3 ft above maximum water surface. In-place testing of the earth liner indicated that the permeability of the earth lining was in the range of 1.0 to 10 ft per year.

25. Water was introduced into the forebay to a depth of 25 ft during the period November 1977 through March 1978. Water levels in several of the piezometers and observation wells located in the valley side between the forebay reservoir and the power plant began to rise shortly after completion of this first introduction of water into the forebay. By the summer of 1979, the water level had risen over 8 ft in one well and 4 to 6 ft in several others. Since other wells had not either responded or experienced water level decreases, the continuous rise experienced in some wells was considered to be attributable to water in the forebay rather than cyclical changes in the ground-water level.

26. An old (several thousand years) landslide scarp had been noted along the valley side during earlier investigations for the reservoir and power plant. Slope stability analyses for the valley side were performed, and

the stability was found to be marginal for conservative strength parameters and saturated conditions. It appeared, therefore, that enough water to influence stability of the valley side could possibly seep through the compacted earth lining. The decision to line the forebay with an impermeable membrane was made in August 1979.

27. Earthwork. A major portion of the construction activities for installing the membrane lining at Mt. Elbert involved various types of earthwork. For example, before installing the membrane lining, the following earthwork had to be accomplished:

a. Removing and stockpiling existing riprap and other slope protection material (coarse gravel and quarry reject material) placed to protect the existing earth liner from erosion.

b. Excavating and processing the top 2 ft of the existing zone 1 earth lining to obtain earth material for membrane subgrade and earth cover. The excavated material was screened to remove all particles larger than 1 in. in size. The plus 1-in. fraction was later incorporated into gravel slope protection material placed upon the earth cover.

c. Excavating bedding material for the riprap. This material was obtained from the Sinclair aggregate source located northwest of the Mt. Elbert power plant. Existing bedding was later reused as part of the gravel slope protection.

d. Flattening the reservoir side slopes were required to 3:1 or less. This work was performed based on discussions with various membrane lining manufacturers who indicated that the side slopes should be no steeper than 3:1 in order to facilitate earth cover placement and to improve the stability of the cover on the slopes.

e. Subgrade preparation. Since the membrane lining required a very smooth subgrade, considerable time and effort were spent on this work. To serve as a bedding for the lining, previously processed earth material was placed and compacted to a minimum of 6 in. in depth. For compaction and to obtain a smooth surface, two passes of a pneumatic-tired roller followed by two passes with a vibratory steel roller provided satisfactory results. Hand labor was used to remove loose gravel or other materials which could puncture the membrane.

28. After the membrane lining was installed, the following types of material were placed to protect the membrane from weathering, vandalism, animal traffic, ice action, etc., and to provide erosion protection on the side slopes. The materials placed included:

| Material | Depth (ft) | Quantity |
|---|---|---|
| Earth cover | 1.5 | 720,000 $yd^3$ |
| Coarse gravel slope protection | 0.5 | 108,000 tons |
| Quarry reject | 1.0 | 58,000 tons |
| Bedding for riprap | 1.0 | 91,000 tons |
| Riprap | 2.0 | 108,000 tons |

29. To protect the membrane from mechanical damage during construction, vehicles were not allowed to operate directly on the lining. Consequently, the processed earth cover material initially was dumped at the edge of the lining and thereafter spread over the membrane by dozers. A minimum 18-in. depth of earth cover was maintained between the lining and the equipment during the spreading operation. Earth cover compaction of about 95 percent of laboratory standard density was achieved solely by equipment traffic.

30. For placement on the side slopes, the earth cover was spread from the bottom toward the top of slope, again maintaining the aforementioned earth cushion.

31. Membrane lining. The specifications provided alternate bidding schedules for installation of any one of three lining materials. These included 45-mil R CSPE (reinforced chlorosulfonated polyethylene), 45-mil CPER (reinforced chlorinated polyethylene), and 80-mil HDPE. The contractor selected CPER.

32. CPER lining material is of three-layer construction consisting of two equal thicknesses of CPE laminated to one layer of 10 by 10, 1,000-denier polyester scrim. The physical properties requirements for this lining are given in Table 1.

33. The lining was factory fabricated into "blankets," each 14,000 sq ft in size and weighing approximately 5,000 lb. Two shapes of blankets were furnished: 200 by 70 ft, containing 14 factory seams made with a Leister hot air gun; and 100 by 140 ft, containing 29 factory seams made dielectrically. The latter shape was selected primarily for installation on the side slopes. For delivery to the jobsite, the blankets were accordion-folded, rolled, palletized, and transported via commercial truck. Approximately 930 blankets were installed in the forebay reservoir.

34. To install the membrane lining, a crew of 18 to 20 laborers was used to unfold and position the blankets. Adjacent blankets were overlapped a minimum of 6 in., the contact surfaces thoroughly cleaned with trichloroethylene solvent, and the manufacturer's bodied-solvent CPE adhesive applied a minimum width of 4 in. The field seams were then hand rolled and allowed to cure before air testing to detect any weak or unbonded areas. Compressed air at 50 psi, supplied through a 3/16-in. nozzle, was used for this test. In addition to air testing, visual inspection of all blankets and seams was performed by Bureau inspectors.

35. After the field seams were tested and approved, a cap strip was applied. The cap strip consisted of a 3-in.-wide, 30-mil-thick unsupported CPE fully bonded over the field seam.

36. To check the seaming method and integrity of the resultant seams (this installation involved approximately 50 miles of field seams), the following samples were taken daily:

a. One 2- by 2-ft cutout sample taken randomly.

b. A field fabricated sample for every 1,000 ft of field seams made. These samples were prepared by having the seaming crews seam two 1- by 2-ft pieces of similar material so that the completed seamed sample was 1.5 by 2 ft in size.

Both peel and shear tests were conducted on the samples to monitor and determine the integrity of the field seams.

37. For installation on the side slopes, an anchor trench 1 ft wide by 2.5 ft in depth was excavated at the top of the slope to hold the lining in place. The lining was placed down and across the bottom of the trench. It was then backfilled and compacted.

38. The upstream face of the forebay dam was not lined. The membrane lining was terminated in an anchor trench in zone 1 material at the toe of the embankment dam. This trench was backfilled with compacted zone 1 material.

39. Quality control program. An extensive quality control program was conducted in conjunction with the Mt. Elbert installation. The procedures implemented for this program included:

a. Requiring the contractor to submit for approval certified laboratory test reports on the physical properties listed in Table 1 for each day's production of the CPER roll goods before fabricating the blankets.

b. Weekly visits to the fabrication plants by Bureau resident inspectors to view and monitor the factory seaming methods.

During these visits, they also audited the shear test results for factory seams.

c. Obtaining the samples for every 10th blanket for testing and approval at the Bureau's laboratory in Denver.

d. Air lance testing all factory and field seams (involving approximately 400 miles of seams).

e. Daily sampling and testing of field seams, and visual inspection, previously described under the section pertaining to the membrane.

40. Test section. Included in the specifications for this work was a 5-year maintenance warranty period on the membrane lining. To monitor the performance of the lining during the warranty period and for long-term research purposes, a 20- by 100-ft test section was installed in the southwest corner of the reservoir.

41. This location was selected to allow easy retrieval of the samples at intervals over a period of years. The test lining was placed on a cushion of sand above and separate from the main lining, thus precluding the need to cut and patch the actual lining to obtain samples.

42. The limitations of the test section are that the reservoir water will have access to both sides of the test membrane, and the actual effects of stresses introduced into the reservoir lining during installation and operation will not be reflected except for freeze-thaw cycling. Also, the effects of hydrostatic pressure present in deep parts of the reservoir will not be evident.

43. The test section was field fabricated into one large sheet and then cut into 11 separate sections for periodic sampling. Each section contains both types of factory seams, and field seams, both capped and uncapped.

44. The physical property tests listed below are being used to monitor the changes in the lining. These tests include:

a. Hydrostatic resistance using the Mullen burst (ASTM: D-751, method A).

b. Hydrostatic puncture resistance using the Bureau test facility and standard subgrade.

c. Ply adhesion (ASTM: D-413, machine method, type A).

d. Tear resistance (ASTM: D-751, tongue tear, method B).

e. Low-temperature bend test (ASTM: D-2136).

45. For the seams, the following tests are being conducted:

a. Seam strength in shear (ASTM: D-751 as modified in Appendix A of NSF standard No. 54, "Flexible Membrane Linings," dated November 1985).

b. Seam strength in peel (ASTM: D-413 as modified in Appendix A of NSF standard No. 54).

46. Samples have been retrieved on a yearly basis during the 5-year warranty period. A report is now being prepared summarizing the results of the laboratory tests.

San Justo Reservoir

47. San Justo Reservoir is located 3.4 miles southwest of Hollister, California. When completed in the fall of 1986, the reservoir will impound approximately 10,800 acre-ft of water for municipal and irrigation purposes which includes 690 acre-ft for flood control purposes (Cyganiewicz 1986).

48. The reservoir will become an off-stream regulating facility that will be enclosed by two earthfill embankments on the west (dam) and north (dike) sides of the reservoir. The reservoir will be filled and releases will be made by an inlet-outlet works located in a tunnel through the east side of the reservoir. An emergency spillway is located near this structure and is provided strictly as a guard against overfilling of the reservoir.

49. Several large beds of clean sand are located within the reservoir site. In addition to loss of water, the increased seepage through the sand beds could increase the potential for landslides on the downstream portions of natural ridges which enclose the reservoir. Consequently, the decision was made to install a flexible membrane lining over sloping portions of the reservoir containing the impervious sand beds. In flatter areas where natural impervious soil covers the sandbeds, a supplemental 6-ft-(minimum) thick earthfill blanket of clay was placed in lieu of the membrane lining.

50. Several types of FML's were included as options in the specification (USBR 1984). The contractor selected the 40-mil HDPE-A (high-density polyethylene elastomeric alloy) flexible membrane lining.

51. Approximately 227,000 sq yd of this HDPE-A material was installed at six locations within the reservoir site. To protect the membrane from the elements and mechanical damage, a soil cover was placed over it. The protection consisted of 18 in. of impervious earthfill cover, 6 in. of bedding material, and 12 in. of rock fragments. The installation was accomplished during the summer and fall of 1985.

52. In February 1986, extensive rains caused some slippage of the protective cover at several locations resulting in approximately 15,000 sq yd of lining being exposed. Specifications (USBR 1986) have been issued for the repair of areas damaged from the slippage. The repair work is scheduled to be completed in the fall of 1986.

## Research Activities

53. The Bureau is currently involved in the following research activities:

a. Evaluation of exposed membrane linings such as CPE, Hypalon, EPDM, butyl, and HDPE for use in canal lining construction. These materials are being studied as alternates to concrete and buried membrane lining systems. Two sites have been identified for field testing. These include the M&D Canal, Uncompahgre Project, Colorado, and the White Rock Extension Canal, Courtland Unit, Kansas. The projects have indicated an interest in providing labor and equipment to install field study sections if lining materials and technical assistance can be provided by the E&R Center.

b. Evaluation of FML to control hydrilla and other aquatic weeds. A field test installation was made in August of 1982 on Wisteria Lateral Six, Imperial Valley Irrigation District, California. This test installation will provide an opportunity to study shading techniques for controlling hydrilla weeds. Limited studies conducted by the USDA (US Department of Agriculture) using 4-mil LDPE showed promise.

c. Evaluation of bottom-only lining for seepage control in irrigation canals. Results of recent studies on the use of bottom-only membrane lining indicate this may be an effective low-cost method of reducing canal seepage in loessial soils. In these studies, conducted on the Farwell Unit in Nebraska, a reduction of 52 percent in seepage was obtained when 10-mil PVC lining was installed in the canal invert. Additional studies are needed to verify the results and develop guidelines for design and construction associated with this type of membrane lining application.

d. Evaluation of FML for use in the construction of emergency or auxiliary spillways on earth dams and canal wasteways. The objective of this study is to give a preliminary assessment of the concept. If feasible, this approach could lead to a low-cost method of providing the additional emergency spillway capacity. The current study is limited to low head, noncritical, earth embankments. A field installation at Cottonwood No. 5 Dam, Collbran Project, Colorado, has been initiated in connection with the ongoing reconstruction of the dam and spillway (Timblin 1985).

## Future Work

54. As part of the modification work at Pactola Dam, Pick-Sloan Missouri Basin Program, Rapid Valley Unit, South Dakota, the existing dam and two dikes on the left abutment will be raised 15 ft above the present crest. The completed dam will have a maximum structural height of 245 ft and a 2,050-ft crest length. The completed dikes will have a combined crest length of 2,570 ft. Raising the embankment will include the installation of a flexible membrane lining with a geotextile backing and the placement of processed sand, rockfines, and rockfill zones. The purpose of the lining is to reduce the amount of impervious fill.

55. A 60-mil PVC lining is now being considered as the waterproofing element in the elevator shaft to be constructed as part of the new visitor facilities at Hoover Dam. This type of material has been used in tunnel construction in Europe (Werner 1984). The installation at Hoover will be the Bureau's first.

56. The use of plastic membranes in the Bureau's canal lining work continues to increase. Additional installations are planned for the Garrison Unit, North Dakota, and Grand Valley Unit, Colorado. The latter installation will be part of the Colorado River Basin Salinity Control Project.

## References


Bureau of Reclamation. 1986. "Specifications No. 20-C0287, Membrane Liner Modifications," San Justo Reservoir, San Felipe Division, CVP, California.

_____. 1984. "Solicitation/Specifications 4-S1-20-04270/DC-7617," San Justo Dam, Central Valley Project, California.

Chuck, R. T. 1970. "Largest Butyl Rubber Lined Reservoir," Civil Engineering, ASCE.

Cyganicwicz, S. M. 1986. "San Justo Reservoir," USCOLD Newsletter.

Giroud, J. P., and AH-Line, C. 1984. "Design of Earth Concrete Cover for Geomembranes," Proceedings of the International Conference on Geomembranes, Denver, Colorado, Vol. II, pp 487-492.

Krupin, V. A., Suhorvkov, P. A., Morrison, W. R., and Starbuck, J. G. 1982. "US/USSR Joint Studies on Plastic Films and Soil Stabilizers," Interim Report, Vol. 3, Laboratory and Field Studies in Plastic Films.

Martin, J. P., and Koerner, R. M. 1985. "Geotechnical Design Considerations for Geomembrane Lined Slopes: Slope Stability, Geotextiles, and Geomembranes," Vol. 2, pp 299-321.

Morrison, W. R. 1985. "Progress Report on Plastic Lining Construction for the Closed Basin Conveyance Channel, San Luis Project, Colorado," Proceedings of Geotechnical Fabrics Conference, Cincinnati, Ohio, pp 59-63.

Morrison, W. R., Gray, E. W., Jr., Paul, D. B., and Frobel, R. K. 1981. "Installation of Flexible Membrane Lining in Mt. Elbert Forebay Reservoir," REC-ERC-82-2, US Bureau of Reclamation, Denver, Colorado, 46 pp.

Morrison, W. R., and Starbuck, J. G. 1984. "Performance of Plastic Canal Linings," REC-ERC-84-1," US Bureau of Reclamation, Denver, Colorado.

Starbuck, J. G., and Morrison, W. R. 1984. "Flexible Membrane Lining for Closed Basin Conveyance Channel, San Luis Valley Project, Colorado," Proceedings of the International Conference on Geomembranes, Denver, Colorado, Vol. II, pp 333-336.

Timblin, L. O. Jr. 1985. "The Use of Geomembrane for Emergency Spillways, Water Power, and Dam Construction."

Werner, G. 1984. "Sealing and Waterproofing with Geotextile, and Plastic Sheeting in Tunnel Constructions," Proceedings of the International Conference on Geomembranes, Denver, Colorado, Vol. II, pp 353-358.

Table 1

Physical Properties Requirements for CPER (Reinforced Chlorinated Polyethylene) Lining

| Property | Requirement | Test Method |
|---|---|---|
| Thickness, in., minimum | 0.041 | ASTM D-751 |
| Tear strength, lb, minimum | 75 | ASTM D-751 (tongue method) |
| Low temperature | Pass | ASTM D-2136 1/8 mandrel 4 hours at -40°F |
| Dimensional stability, each direction percent change, maximum | 2 | ASTM D-1204 212°F, 1 hour |
| Bonded seam strength, lb, minimum | Exceeds that of parent material | ASTM D-751 (modified) |
| Hydrostatic resistance, $lb/in^2$, minimum | 300 | ASTM D-751 method A |
| Breaking strength, lb, minimum | 200 | ASTM D-751 grab method |
| Ply adhesion, lb/in. width, minimum | 8 | ASTM D-413 machine method, type A |

# REMEDIAL DRAINAGE MEASURES

Walter C. Sherman, Jr.
Tulane University

## Introduction

1. Earth dams subjected to deterioration as a result of percolation and/or internal erosion must be safeguarded by prompt and effective remedial measures. These measures for the most part involve either impermeabilization (water tightening) or drainage.

2. The use of embankment and foundation drainage to provide for the controlled exit of seepage has long been an established practice on Corps of Engineers (CE) dams. The type and extent of the seepage control measures employed vary widely depending not only on site specific conditions but also on the age of the dam. Remedial measures usually consist of restoring or replacing existing drainage facilities which are considered inadequate or providing new drainage facilities when necessary. With respect to foundation seepage, new facilities may include drainage trenches, relief wells, or pervious berms. New drainage facilities to handle embankment seepage may include vertical chimney drains, drain wells connecting to existing horizontal drainage blankets, new outlets, or addition of drainage on the downstream slope. All drainage measures result in shortened seepage paths which result in a usually slight increase in the quantity of underseepage.

3. In a recent (1984) report published by the International Commission on Large Dams, a review was made of various remedial measures applied in the case of earth dams subjected to deterioration because of seepage and/or internal erosion. Where the problems related to the foundation (131 cases), 37 percent of the cases involved some type of impermeabilization such as cutoff walls and grouting, and 31 percent of the cases involved drainage. Similarly, where the problems related to the embankment (137 cases) 23 percent involved impermeabilization and 19 percent involved drainage. On the basis of the above, it appears that drainage and impermeabilization measures are of approximately equal importance as remedial measures.

4. The subject report deals with new and innovative remedial drainage measures for earth dams and their earth foundations when subjected to deterioration by seepage and/or internal erosion.

## Foundation Drainage

### Relief wells

5. For dams founded on permeable foundation strata, control of underseepage and foundation uplift pressures is of prime importance. In many cases, this has been accomplished successfully by the use of pressure relief wells along the downstream toe. Most permeable foundations tend to be stratified with the permeability in the horizontal direction usually many times greater than in the vertical direction. Thus surface drains are generally ineffective in reducing uplift pressures in underlying foundation strata. Pressure relief wells have proven to be very effective in the case of deep stratified pervious foundations and constitute an important remedial measure in situations where excessive foundation uplift pressures develop along the toe of the dam.

6. The use of pressure relief wells as a remedial measure on CE earth dam projects dates from 1942 when wells were installed at Fork Peck Dam. During filling of the reservoir, piezometers at the downstream toe indicated an excess head of about 45 ft above ground surface. A large sand boil also developed. Relief wells were immediately installed, and the piezometric pressure dropped as soon as the first few wells were put into operation.

7. Relief wells are an extremely versatile remedial measure offering the best means of intercepting seepage in deep pervious aquifers. The use of relief wells as a design seepage control measure on levees and dams is well established, and considerable experience is available regarding the design and installation of such systems. Therefore, they represent an excellent remedial measure where it becomes necessary to control underseepage.

8. The use of pressure relief wells to increase the stability of an existing embankment is demonstrated by the experiences at Smithville Dam described by Walberg et al. (1985). Because of uncertainties regarding embankment stability at high pool levels, a series of four 4-in.-diam wells were installed at the embankment toe. Pumping these wells resulted in a piezometric drawdown sufficient to increase the factor of safety with respect to sliding to acceptable values. Pumping the wells, which would be required only when the reservoir pool reached a certain level, was considered to be only an interim solution. A system of permanent relief wells, discharging

into a buried collector pipe, was designed to provide an adequate factor of safety for all pool levels.

Toe drains

9. Controlled grade open toe trenches of various types are commonly employed to lower ground-water levels at embankment toes. Porous concrete slabs with or without an underlying filter have been used for shallow depth trenches. With greater depth the trench is filled with filter gravels. With large anticipated flows, perforated collector pipes with manholes to permit inspection and flow measurements may be employed.

10. Narrow trench drains at the downstream toe of the dam are frequently used to facilitate the escape of shallow seepage and to reduce uplift pressures. They are particularly effective in preventing saturation along the downstream toe. Toe drains are less effective in cases where the foundation permeability increases with depth or where the foundation is stratified.

11. Of special interest is the case where the downstream foundation strata are overlain by an impervious or semipervious blanket. Trench drains extending through the blanket offer a means for reducing foundation uplift pressures providing the foundation strata are not too pervious or highly stratified. Analytical solutions for flow quantities and downstream uplift pressure for horizontal and semicircular trench bottoms are shown in Figure 1. The solutions for a two-layer foundation are given by Barron (1953). It was found for cases where the lower pervious layer is somewhat more pervious than the upper pervious layer, the efficiency of the drain is seriously reduced.

12. When the foundation strata are semipervious and no topstratum is present, partially penetrating trench drains may be employed usually connected with the horizontal drainage blanket to collect seepage. Gradations of the drain materials are based on CE filter criteria. The drains are usually provided with perforated collector pipes connected with gravity outlets. An example of this type of toe drainage system employed at Cochiti dam is shown in Figure 2 (Lillard 1985). The collector pipe also serves as a collector for the pressure relief wells.

13. The effectiveness of toe drains increases as the depth increases; however, greater depths become uneconomical because of the large excavations required and costs of a dewatering system. Deep drains generally require collector pipes with outlets at low elevations in order to be effective.

14. A method for constructing deep trench drains economically has been considered highly desirable by many engineers. Londe (1970) suggested construction of trench drains using a starch slurry to support the excavation during placement of the filter sand backfill. The starch would be removed in a few days by bacteriological action thus creating a drain of the required porosity. Whether such drains were constructed is not known.

15. Drain wall. A method for constructing deep drainage trenches by the panel method has been developed by Bachy Enterprises, France. The method described by Deniau et al. (1981) has been used to construct drainage trenches to depths of about 30 ft. Excavation of panel sections are supported by a biodegradable slurry. Filter material is placed in layers through the slurry or else can be placed as preformed panel units. Procedures have been developed for excavating and fitting adjacent panels to provide a continuous wall-type French drain. The effectiveness of the drain has been verified by field measurements. At least five installations have been made as of 1986 according to Bachy Enterprises, who consider the drain wall to be more effective than relief walls because of its continuous nature. No information is available on the characteristics of the biodegradable medium.

16. Prefabricated drainage panels. Prefabricated panels of plastic are now available which have been suggested by manufacturers for potential use in the control of underseepage. The panels generally consist of a plastic core shaped in a series of peaks, valleys, and water channels which support a geotextile filter fabric. The fabric allows water to pass freely from the soil, between the open supporting core peaks, and to flow away via the channels. The type and placement (fully wrapped, one side only, or no geotextile at all) of the filter fabric, the physical dimensions (thickness, width, and length), and the type and crushing strength of the core material can be varied to meet special requirements. The permeability of some panels is reputed to be maintained of depths up to 40 ft and with lateral pressures of 1,600 psf. The panels have been used primarily for the reduction of hydrostatic pressures in below grade structures and behind retaining walls. A partial list of manufacturers is shown in Table 1. The physical characteristics of the panels vary widely. Evidently, the panels have not been used on any embankment dams to date.

17. Despite claims made by the manufacturers of prefabricated drainage panels there remain many important questions regarding their effectiveness.

The possibility of the filter clogging with fine soil particles, smearing effects caused by installation, and permeability characteristics in the transverse and axial directions are factors which may affect their performance. In addition to further laboratory tests, field tests are needed to evaluate their performance under job conditions.

## Embankment Drainage

18. Embankment seepage may increase during the life of a dam for a variety of reasons. Cracking of the clay core is usually the primary cause of increased seepage. Excessive seepage for those dams which do not employ a chimney drain is usually denoted by wet spots or sloughing of the downstream slope. The selection of a remedial drainage system depends on the magnitude of seepage, the geometry of seepage paths, location and condition of existing drainage facilities, and time and funding available for implementation. Location of the source of seepage may be a difficult time-consuming problem which must be solved before designing an appropriate seepage control measure. This is specially true for older dams where good construction records may be lacking.

### Dams with no internal drainage

19. Older dams with no internal drainage systems, if subject to subsequent cracking, could be subjected to undesirable seepage. Under such conditions, the most effective approach, particularly if the embankment is of limited height, is to excavate the downstream portion of the dam and incorporate a horizontal drainage blanket and chimney drain. A more cost-effective solution consists of trenching near the axis of the dam to the depth of cracking, filling the trench with a filter material, and providing suitable outlets at intervals to the downstream toe areas.

### Soil Conservation Service dams

20. The Soil Conservation Service (SCS) constructed a number of long, low dams with homogeneous cross sections in Arizona. The dams, generally of sand clays and sandy silts, were not provided with seepage control measures. Many of the dams experienced cracking that appears to be associated with desiccation. The SCS instituted a remedial repair program using a filter-drainage system to seal the cracks. This procedure described by Talbot et al. (1985) consists of trenching to the depth of cracking and filling the trench

with a properly graded gravelly sand filter. The design (see Figure 3) includes drain outlets, spaced at intervals generally less than 100 ft, that are constructed of gravels coarser than the filter. The construction is feasible as the dams are generally less than 30 ft in height and do not retain a reservoir except in the event of high intensity rain storms.

Vertical embankment drains

21. For older earth dams which have horizontal drainage blankets but no chimney drain, through seepage may be intercepted by installing vertical drains downstream of the core which intercept the existing drainage blanket. Various types of vertical drains have been developed primarily for the reduction of excess pore pressures in fine grained soils, but may also have application for intercepting embankment seepage. Significant advances have been recently made in the development of installation equipment and materials used in prefabricated drains, permitting installations to depths of over 30 m in a single operation of rates in excess of 1 m/sec. A summary of practical factors which influence the design, performance, and costs of vertical drainage systems is presented by McGowan and Hughes (1982).

22. The major types of drain installations include: (a) traditional sand drains, (b) sandwicks consisting of filter sand prepacked in geotextile filter stocking and placed in predrilled hole, (c) wrapped flexible pipes consisting of flexible, usually corrugated plastic pipe surrounded by a geotextile filter cloth, and (d) band drains such as Geodrain and Alidrain. The band drains generally have insufficient permeability to be considered for seepage interception in an earth dam.

Arroyito Dam

23. The Arroyito Dam, a 20-m-high earth fill dam in Argentina described by Giuliana et al. (1985), was observed to have areas of seepage on the downstream face of the dam during initial impoundment of the reservoir despite the presence of a substantial downstream drainage blanket. It was concluded from piezometric data that the most likely cause of seepage was the presence of horizontal stratification in the embankment with layers of high permeability which forced the water to exit at the downstream face. Remedial measures included a system of vertical drains, 3 in. in diameter and about 18 ft deep, located on the downstream slope and intercepting the drainage blanket.

Kanapolis Dam

24. A novel approach to provide additional embankment drainage is being carried out by the CE Kansas City District at Kanapolis Dam. The embankment was constructed as a homogeneous section with a downstream drainage blanket which was found to be inadequate with respect to interception of through seepage. The Kansas City District is currently developing a method for installing vertical drains near the top of the embankment, which intersect the existing drainage blanket. The drains consist of 10-in.-diam holes filled with a filter sand. Initially a geotextile sleeve was used as a liner but was subsequently eliminated. The drains are spaced at 10 to 20 ft and extend to depths of 70 ft. The design and construction of the drains were developed on the basis of field experience. Data are not yet available on the effectiveness of the drains in control of the embankment seepage.

Prefabricated drainage panels

25. Prefabricated drainage panels installed as chimney drains would appear to have some merit in the case of small dams. An important advantage would be that flow in the panels would be under gravity conditions to outlets at the toe of the dam. As previously noted, considerably more development and testing are required before the panels could be considered for use in an embankment.

## References


Barron, R. A. 1953. "The Efficiency of Toe Drains in Controlling Seepage Uplift in Layered Pervious Foundations," Proceedings of Third International Conference on Soil Mechanics and Foundation Engineers, Vol. II, Switzerland.

Deniau, Cartier, G., Morbois, and Virollet, M. 1981. "Un Nouveau Procede de Drainage: la Paroi Drainante," Proceedings of Tenth International Conference on Soil Mechanics and Foundation Engineering, Stockholm, Sweden.

Giuliana, F. L., and Pujol, A. 1985. "Seepage and Slide Downstream Slope, Arroyito Dam, Argentina, Remedial Measures," Transactions of Fifteenth International Congress on Large Dams, Vol. IV, Lausanne, Switzerland.

Lillard, D. E. 1985. "Seepage Control at Cochiti Dam, New Mexico," Proceedings of Symposium on Seepage and Leakage from Dams and Improvements, American Society of Civil Engineers, New York.

Londe, P. 1970. "Recent Developments in Inc. Design and Construction of Dams and Reservoirs on Deep Alluvium, Karstic and Other Unfavorable Formations," General Report on Question 37 Transactions of Tenth International Congress on Large Dams, Montreal, Canada.

Londe, P. 1984. "Deterioration of Dams and Reservoirs," International Commission on Large Dams, Paris.

McGowan, A., and Hughes, F. H. 1982. "Practical Aspects of the Design and Installation of Deep Vertical Drains," Vertical Drains, Institution of Civil Engineers, London.

Talbot, J. R., and Ralston, D. C. 1985. "Earth Dam Seepage Control, SCS Experience," Proceedings of Symposium on Seepage and Leakage from Dams and Impoundments, American Society of Civil Engineers, New York.

Walberg, F. C., Facklam, H. L., Willig, K. D., and Moylan, J. E. 1985. "Abutment Seepage at Smithville Dam," Proceedings of Symposium on Seepage and Leakage from Dams and Impoundments, American Society of Civil Engineers, New York.

Table 1

Typical Prefabricated Drainage Modules

| Trade Name | Manufacturer |
|---|---|
| Bidim | Quline Corporation |
| Eljen Drainage System | Eljen Corporation |
| Enkadrain | American Enko Company |
| Filtram | ICI Americas |
| Geofab | Mercantile Development Inc. |
| Geotech Drainage Board | Southern Ohio Foam |
| Hitek | Burcan Manufacturing Company |
| Hydraway | Monsanto Company |
| Miradrain | Mirafi Inc. |
| Permedrain | NW Fabrics Company |
| Tensor | The Tensor Corporation |

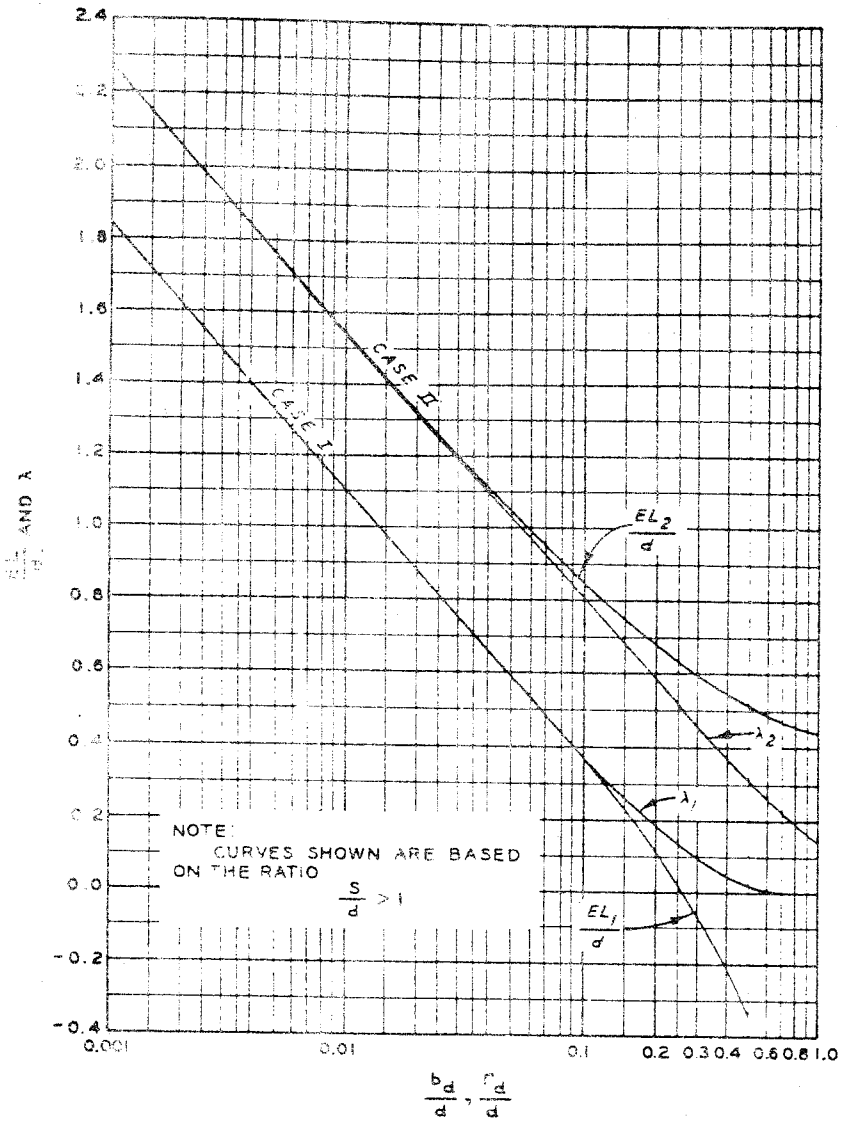


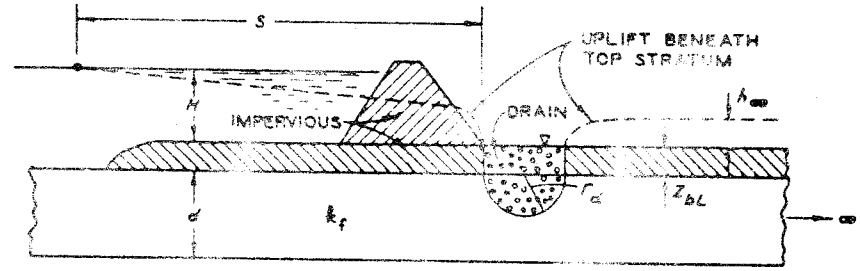


SHAPE FACTOR $\xi_1 = \frac{1}{\frac{S + r_d}{d} + \frac{EL_1}{d}}$

MAXIMUM NET UPLIFT RATIO UNDER TOP IMPERVIOUS BLANKET LANDSIDE OF DRAIN IS

$$\frac{h_\infty}{H} = \xi_1 \lambda_1$$

CASE I

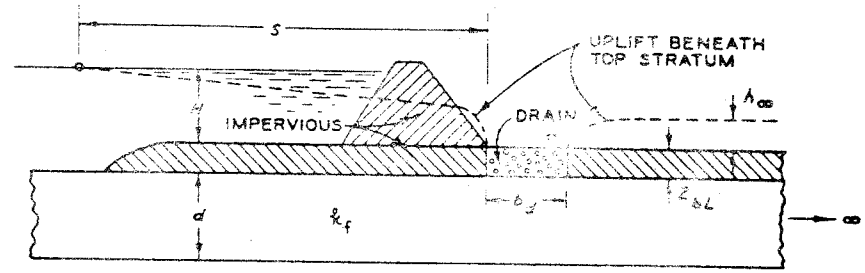


SHAPE FACTOR $\xi_2 = \frac{1}{\frac{S}{d} + \frac{EL_2}{d}}$

MAXIMUM NET UPLIFT RATIO UNDER TOP IMPERVIOUS BLANKET LANDSIDE OF DRAIN IS

$$\frac{h_\infty}{H} = \xi_2 \lambda_2$$

CASE II

SEEPAGE PER UNIT LENGTH OF STRUCTURE IS $q = k_f H \xi$

EL IS EXTRA LENGTH FACTOR

$\lambda$ IS UPLIFT FACTOR

NOTE:

WHERE $k_H > k_V$, TRANSFORM PERVIOUS SUBSTRATUM TO A HOMOGENEOUS, ISOTROPIC FOUNDATION AND USE $\bar{k}_f$ FOR $k_f$ AND $\bar{d}$ FOR $d$ IN ABOVE FORMULAS.

$\bar{k}_f = \sqrt{k_H k_V}$ AND $\bar{d} = d\sqrt{\frac{k_H}{k_V}}$

Figure 1. Formulas and design curves for drainage trenches

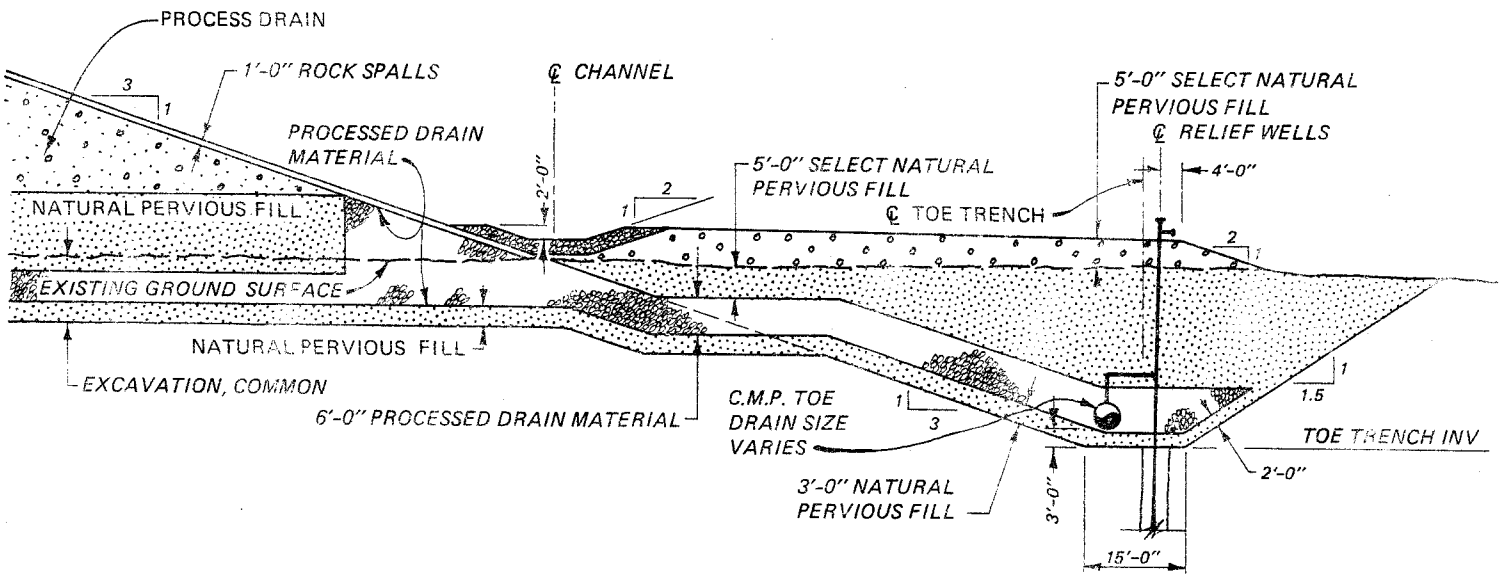


Figure 2. Toe drainage system - Cochiti Dam

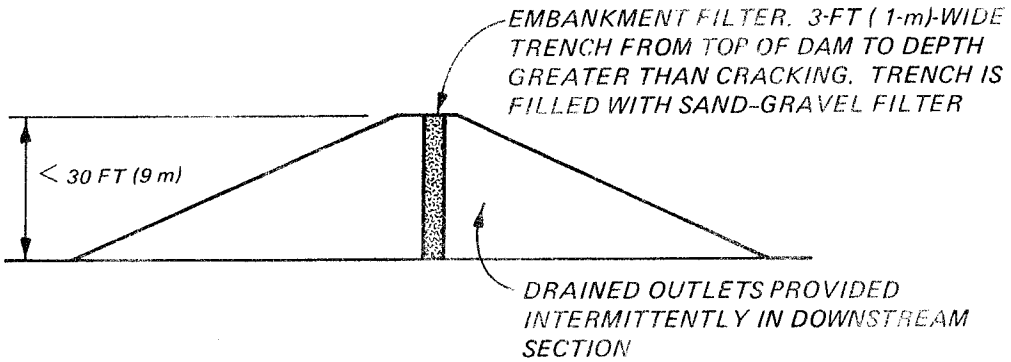


REPAIR MEASURE FOR CRACKED DAMS LESS THAN 30 FT (9 m ) HIGH USING SAND-GRAVEL FILTERS

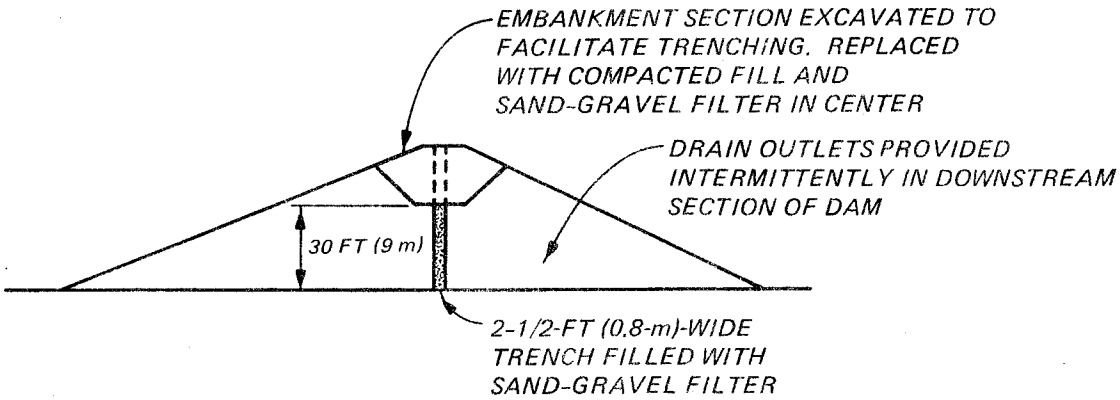


REPAIR MEASURE FOR CRACKED DAMS OVER 30 FT (9 m ) HIGH USING SAND-GRAVEL FILTERS

Figure 3. Remedial seepage control on SCS dams

# USE OF THE HYDROFRAISE TO CONSTRUCT CONCRETE CUTOFF WALLS

Jonathan J. Parkinson
Soletanche and Rodio, Inc., Paris, France

## Introduction

1. The SOLETANCHE HYDROFRAISE is a machine used for excavating trenches for concrete slurry walls. The idea of building such a rig stems from the early 1970's when the need to provide deep underground parking garages in Paris, France, led to the requirement of installing slurry walls close to adjacent buildings, through varied types of soil which frequently contained hard limestone layers up to 50 ft thick. The traditional methods used for cutting through rock, i.e., chiselling or explosives, were very slow at best, and not acceptable in an urban environment.

2. The name "HYDROFRAISE" is an abbreviation of the French for "hydraulically powered milling machine" and describes the machine's basic features - hydraulic motors driving cutter drums. A less obvious but equally important part of the concept is the method used for continuous spoil removal during the excavation process. The machine has been the subject of continuous development and refinement since its inception, but the basic layout has remained the same.

## Description of the machine and method of operation

3. A HYDROFRAISE "work unit" consists of four principal components:

- Heavy duty crawler crane, 100- to 150-ton capacity.
- Hydraulic power-pack.
- HYDROFRAISE itself.
- Slurry treatment plant

4. The HYDROFRAISE consists of a metal frame 50 ft high, weighing 20 to 25 tons depending on the model (Figure 1). At the base of the frame there are three hydraulic motors.

5. Two of these operate the cutting drums, one motor being built into the center of each drum (Figure 2). The speed of rotation is slow, about 10-20 rpm, but the torque is sufficient to break up all the soil and rock

encountered during trench excavation. The drums have tungsten-carbide teeth which are replaceable; they are changed when they become excessively worn. The rate of wear depends on the type of soil or rock being excavated.

6. The third hydraulic motor operates a special pump mounted centrally just above the cutter drums (Figure 3). The drums rotate in opposite directions, bringing the excavated material towards the center at the base, and then upwards towards the lower orifice of the pump, which continuously pumps a flow of bentonite slurry in through this orifice, up through a hose to the surface and thence to the desanding plant. All the excavated spoil is caught in this ascending flow of slurry and thus removed from the trench; the HYDROFRAISE excavates continuously downwards until it reaches the required depth of the cutoff. This spoil-removal system is similar in principle to the reverse-circulation system used on some rotary drilling rigs.

7. Clean, screened bentonite slurry is fed back into the top of the trench to compensate for the volume pumped out and for the increasing trench volume as excavation proceeds.

8. The power pack is mounted on the rear of the crane. It is diesel driven and provides hydraulic power for the three down-the-hole motors.

9. Built into the upper part of the HYDROFRAISE frame, there is a hydraulic feed cylinder (Figure 3). The support cable from the crane is connected to the piston of this unit and not directly to the HYDROFRAISE frame. The operator can use this device to control the effective weight of the HYDROFRAISE, i.e., the force of the vertical reaction at the base of the cutter drums. For cutting through rock, the maximum weight of the machine is mobilized, but for excavating soft materials, the weight can be partially relieved so that the excavation rate does not exceed the capacity of the spoil-removal pump.

10. The slurry desanding plant consists of a slurry preparation unit, holding tanks, and the actual desander, which works by continuously screening and centrifuging the spoil-laden slurry arriving from the trench. The type of desander used with the HYDROFRAISE produces spoil which is virtually free of bentonite. The spoil can be handled by conventional loaders and trucks. The fact that all the spoil from the trench transits to the desander in a pipeline, together with the clean state of the spoil, means that the work platform and the desander area can be kept clean -- a difficult feat with a conventional slurry wall operation.

11. In a single cut the HYDROFRAISE creates an 8-ft long excavation; this is the overall length defined by the exterior of the cutter drums, measured along the wall axis. The lateral width, i.e. the thickness of the panel being excavated, can be varied by changing the drums from 25 in. (minimum) to 5 ft, which is the practical maximum. Operation depth is usually up to 300 ft, but greater depths can be attained to suit project requirements.

## Excavation Performance

12. The upper limit of rock hardness for excavation with the HYDROFRAISE is an unconfined compressive strength of about 15,000 psi. The excavation rate varies inversely with the rock hardness.

13. The HYDROFRAISE is also extremely efficient in excavating through soil. In dense sand and gravel or residual soils for example, the excavation rates can be well above those obtained with clamshell equipment.

14. The one limiting condition on use of the HYDROFRAISE is the presence of boulders of extremely hard rock. When these have a diameter greater than about 4 in., they cannot be crushed or be removed by the spoil-removal system, and the HYDROFRAISE is not recommended for use in situations where there is a large quantity of such boulders.

15. The cutting action of the drums is such that there are no shocks or vibrations, even when cutting through rock. This is of extreme significance for urban-type slurry wall sites, but it can also be important in dam repair work where heavy chiselling during excavation with conventional equipment can cause vibrations that are undesirable for trench stability or can fracture the rock surrounding the trench.

16. Since the HYDROFRAISE excavates a full-depth cut without being brought to the surface, it avoids the constant up-and-down motions of clamshell excavating rigs, which can cause local instability of the trench walls in some cases. Confirmation of this is found in the fact that overbreak is considerably less with HYDROFRAISE excavated cutoffs.

## Permanent Desanding

17. The use of the reverse circulation principle means that the bentonite slurry is continuously desanded and the slurry in the panel being

excavated is always clean, with a low sand content. Thus there is usually no need to undertake an extensive desanding operation when excavation is complete and before concreting.

Panels and panel joints

18. A slurry wall installed using the HYDROFRAISE consists of primary and secondary panels, but the relative lengths of the panels and the method of forming the joints is different from that of clamshell walls.

19. Primary panels usually consist of three or five full-depth HYDROFRAISE "bites" (Figure 4). In the case of a three-bite panel there are two 8-ft-long segments separated by a soil "wedge" about 3-1/2 ft long, which is removed by the third bite to give an excavated panel (8 + 3-1/2 + 8) = 19-1/2 ft long. A five-bite panel typically has an excavated length of (8 + 3-1/2 + 8 + 3-1/2 + 8) = 31 ft. Once excavated, a primary panel is concreted, without the use of joint pipes of any sort. Concreting is by tremie, as for a conventional concrete cutoff wall. The primary panels are accurately positioned so that they are exactly 7-1/3 ft apart.

20. A secondary panel is formed between the primaries by a single HYDROFRAISE bite, which is necessarily 8 ft long. As the HYDROFRAISE descends, it excavates the 7-1/3-ft length of soil or rock left between the primaries, and it also removes 4 in. from the end of each adjacent primary (Figure 5). Since it is able to cut into rock of up to 15,000 psi, it has no difficulty in cutting the concrete of the primaries, which typically will have a strength of about 2,000 psi when the secondaries are installed. When excavation has reached full depth, the secondary is concreted.

21. The panel joint produced by this method consists of a serrated surface resulting from the presence of grooves cut in the concrete of the primary panel during excavation of the secondary, with a tight concrete-to-concrete contact between the panels. These joints have proved to be very watertight.

22. As mentioned above, joint pipes are not used at all to form the joints; this is an important advantage over conventional methods, especially for very thick and very deep cutoffs.

## Verticality Control

23. In order to produce a high quality cutoff wall, and in particular to construct the panel joints as described above, it is essential that the

verticality of the excavation be kept extremely accurate. In this respect the HYDROFRAISE can attain a precision which far exceeds that of other equipment. In a test performed in 1979, the maximum deviation at a depth of 330 ft was kept to within 6 in., i.e. 0.15 percent of the depth. This can be compared with the usual criterion for slurry walls, which is 1.0 percent of the depth.

24. Several features of the HYDROFRAISE enable such precision to be attained. Built into the HYDROFRAISE frame, there are four high-precision inclinometers, of which the read-out dials are in the crane cabin in front of the operator. Readings from these instruments enable constant observation to be made of the verticality of the HYDROFRAISE in both the longitudinal and transversal directions.

25. In the event of a tendency to deviate in the longitudinal direction, the operator can immediately modify the hydraulic power supplied to each of the cutter drum motors in such a way that the deviation is corrected.

26. Deviations in the transversal direction are corrected by actuating hydraulic pistons, which enable the operator to tilt the plane of the entire cutter drum assembly in relation to the HYDROFRAISE frame.

27. A permanent record of the verticality readings and of other excavation parameters can be obtained by using the ENPAFRAISE. This device records and provides a simultaneous printout of the following parameters:

- Four inclinometers.
- Torque supplied by each cutting motor.
- Excavation rate.

28. The quality of the finished cutoff wall, in particular the wall verticality and the soundness of the panel joints, leads to use of the HYDROFRAISE on projects where the soil contains no rock, but where the above aspects or other advantages of this machine dictate its use.

## Application to Embankment Dams

29. The method of operation of the HYDROFRAISE makes it highly suitable for use in installing concrete cutoffs for embankment dams and other seepage control projects.

30. In addition to the aspects described in the preceding chapters, with the HYDROFRAISE it is possible to cut a key in the vertical face of an

existing concrete structure at the point where the cutoff wall contacts such a structure.

31. Also, when the cutoff is installed through the dam core and into the rock below, the problem of keeping the excavation on line at the abutment sections, where the core-rock interface is often steeply inclined, is solved by using the HYDROFRAISE's verticality-control devices.

32. Another problem sometimes arises when the alignment of the cutoff intersects existing steel grout pipes, or concrete dental work at the core-rock contact. In both cases, the HYDROFRAISE can cut its way through the obstacles.

33. The HYDROFRAISE can be used on any cutoff wall project where bentonite slurry is used during trench excavation. It has always been used on concrete panel-type walls: either normal "hard" concrete of 3,000- to 4,000-psi strength, or "plastic" concrete of lower strength and greater deformability. There is no reason, however, why it could not be used for excavating the trench for a soil-bentonite cutoff, where hard ground or other considerations favor its use.

34. To date, the HYDROFRAISE has been used to install more than 4 million sq ft of slurry wall worldwide including, in the United States, St. Stephen Dam in South Carolina and Fontenelle Dam in Wyoming. Its continuing improvement in performance makes it suitable for use on more and more projects, especially those where its unique features can be utilized to the full.

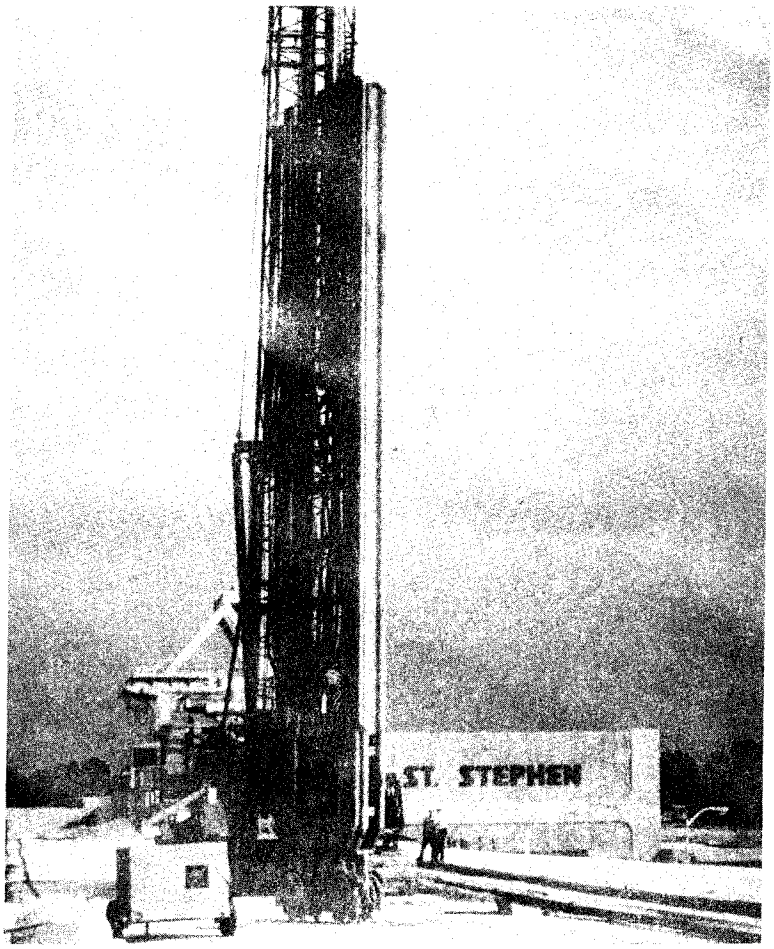


Figure 1. General view of the HYDROFRAISE

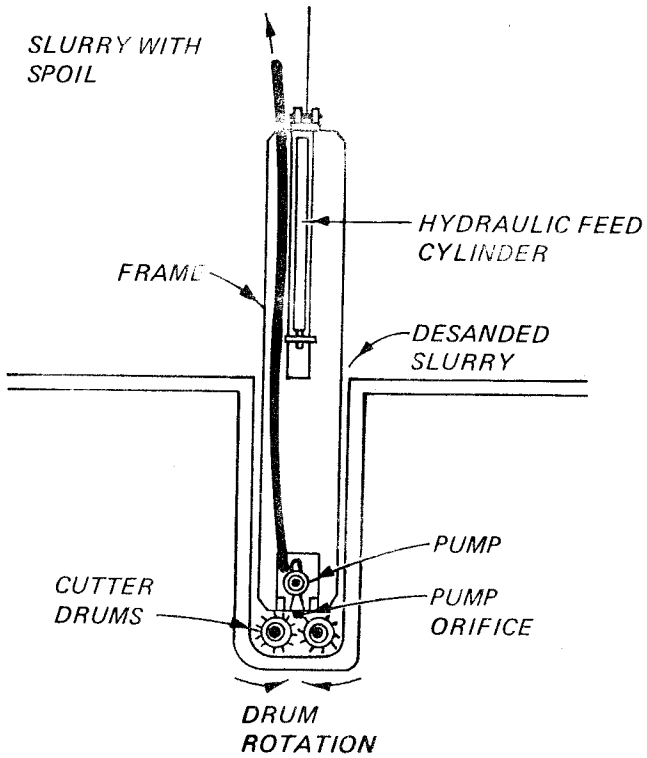


Figure 2. Schematic view of HYDROFRAISE

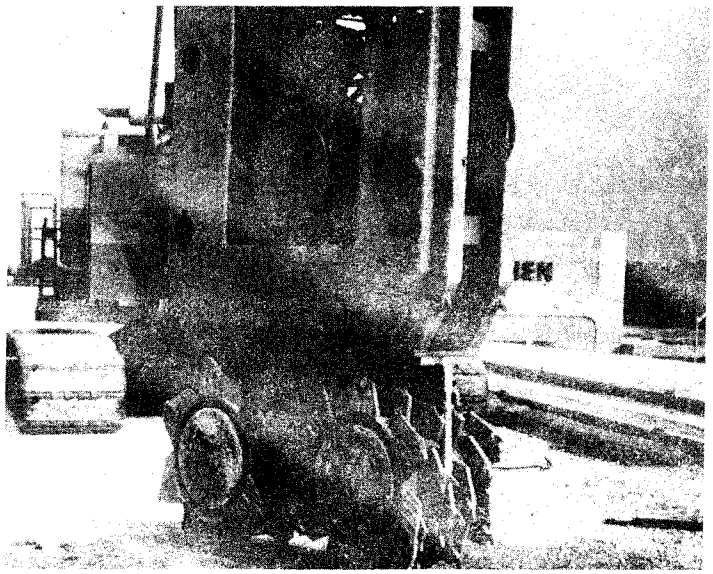

Figure 3. Detail of cutter drums

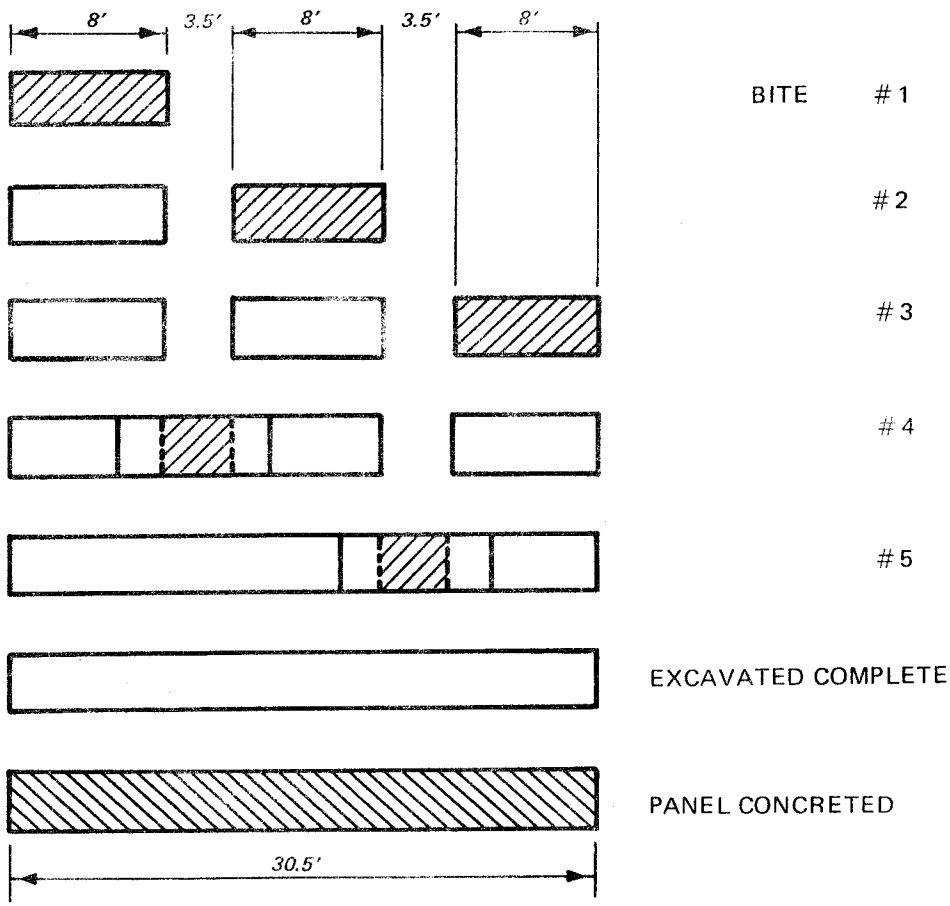


Figure 4. Plan view of construction sequence of a typical five-bite primary panel

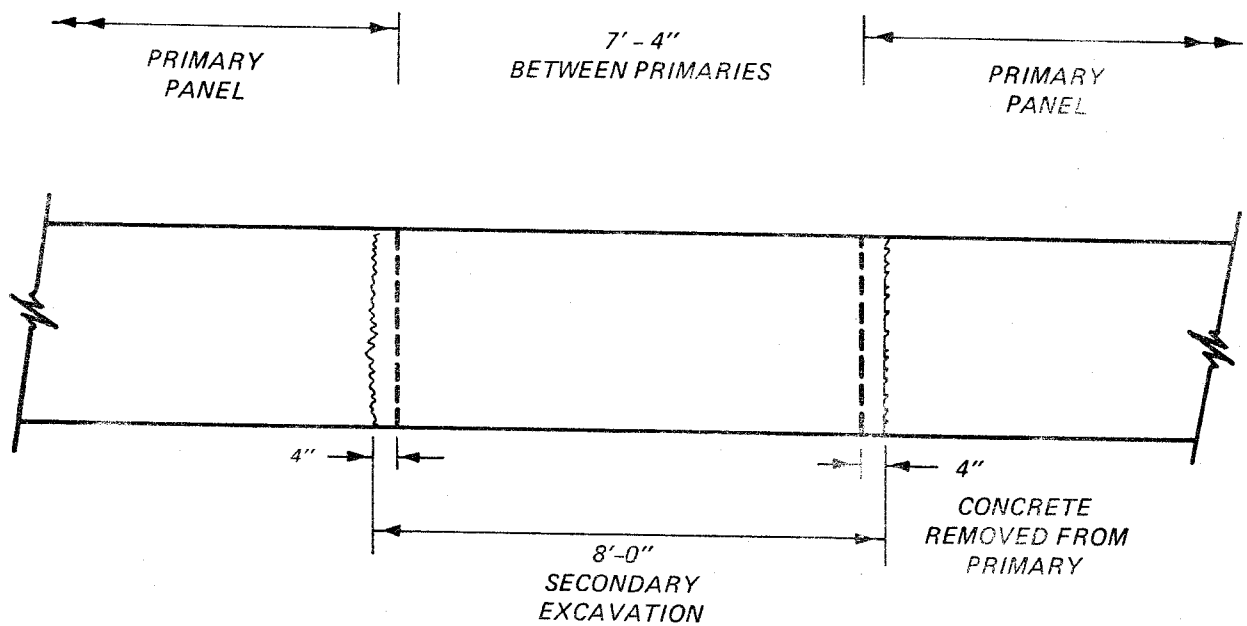


Figure 5. Plan view of excavation of secondary panel

# JET GROUTED CUTOFF WALLS

Georgio Guatteri, Paolo Mosiici
Novatecna, Sao Paulo, Brazil

Victorio D. Altan
Suelotecnica, Buenos Aires, Argentina

## Dimensions and Physical Properties of Soil-Cement Bodies That Can Be Placed by Jet Grouting Methods - Recent Developments

### Introduction

1. Jet grouting is a general term which can be applied to any construction method which utilizes an ultra-high pressure fluid (typically 5000 psi.) to cut, replace, and then mix the native soil with a cementing material, often a water-cement grout. At present there are about eight different construction techniques which can be classified as jet grouting methods.

### Background and Historical Perspective

2. The original idea and early studies of using high pressure water jets to cut, remove, and cement soils were conducted in Japan about 1965 by the brothers Yamadado. In early 1970, two competing forms of jet grouting were developed nearly simultaneously. The jet grouting technique developed by Nakan, originally utilized chemical grouts, but now water-cement grout as the jetting medium which is injected at ultra-high pressures through horizontally projected small nozzles (1.8 - 2.2 mm), which are located at the bottom of a single drill rod, which is depicted in Figure 1. Because the single rod is both lifted and rotated while jetting the grout, a pile-like soil-cement column is formed, from whence arises the name of this type of jet grouting: chemical churning pile or CCP jet grouting. Typical CCP columns are about 0.8-1.0 meters in sand, and 0.50-0.70 meters in clay.

3. The other jet grouting technique developed in Japan about 1970 was termed jet grouting by its originator Yahiro and Kajima Construction Company. The most distinctive feature of this method is related to the three rod system employed to cut, replace, and cement the in-situ soil. The three rod system is required because three different types of fluids are used during jet grouting: water, air, and cement grout. High pressure water is spouted as

the jetting medium through the narrow outer rod, depicted in Figure 2, while the cement grout is injected into the cut soil at relatively low pressures (100 - 200 psi), through the center rod and then out nozzles located below the cutting jet. Yahiro discovered that enshrouding the high pressure water jet within a cone of compressed air allowed the jet to project its energy farther into the soil mass which results in a deeper cut into the soil. Originally, the three rod system was used to form panels (no rod rotation). However, due to the popularity of CCP jet grouting, Yahiro modified his jet grout method in 1975 so that the three rod system could be rotated to form columns. This variation of jet grouting was termed column jet grout (CJG). Typical CJG are about 2.0-3.0 meters in sand, and 1.5-2.0 meters in clay.

4. Also in about 1975 Nakanishi modified the CCP technique so that compressed air could be used to protect the cutting water-cement jet. This form of jet grouting utilizes a double rod system, as illustrated in Figure 3, and was called jumbo-special grout (JSG). The major advantage of jumbo grout (JG) is that compressed air allows the use of a double rod. Thus simpler and more robust equipment is employed. For example, it is easier to remove a double rod (than triple rod) when shortening the drill string in a tight overhead.

5. More recently (1981), Nakanishi developed a jet grouting method which can totally replace the in-situ soil with chemical or water cement grouts. This soil replacement method was termed: super soil stabilization management (SSS-MAN). The SSS-MAN system is schematically represented in Figure 4.

6. CCP jet grouting was first introduced in South America in 1980 by Novatecna Construction Ltd. of Sao Paulo, Brazil. Jet grouting was rapidly accepted in Brazil because this technique was better suited to grouting the silty and clayey soils of coastal Brazil than conventional intrusion and permeation grouting techniques. However, due to the robust nature of jet grouting many other applications followed quickly, such as: construction of gravity retaining walls (Mercedes Benz and Dalmine Siderca pits); deep shafts for pump stations (Capivari pit), diaphragm walls beneath earth dams (Porto Primavera, Edgard de Souza Dams, and the Piedra del Aguila test section). The details of these particular projects are discussed in subsequent sections of this paper.

7. The diversity of applications of jet grouting produced a need for larger diameter columns than what was being produced using the CCP process.

In early 1985, field experiments were conducted by Novatecna in an attempt to improve the design methodology and construction of jet grouted columns. Novatecna employed the jumbo grout method in field trials where approximately 30 columns were drilled in various soil formations (sand and clay) using various drilling parameters (nozzle pressure and size, rotation rate, lifting speed, grout injection rate, compressed air enshrouding the water/cement jet). The test measurements indicated that columns 2 to 3 times larger than conventional CCP columns could be economically formed if relatively large sized nozzles (up to 3.4 mm in diameter) and high grout injection rates (200-250 l/min) were used to drill the columns. By injecting a larger slug of cement grout into the soil, than that injected during the CCP process, larger columns could be formed using relatively low nozzle pressures (3000 psi.). This approach to jet grouting is in direct contrast to the original CCP process proposed by the Japanese in the early 1970's, who advocated smaller diameter nozzles (2 mm and less), higher nozzle pressures (5000 psi and above), and much lower grout injection rates (50-70 l/min.). Prior to 1986 over 150,000 meters of CCP columns have been built in Brazil; after 1986, JG jet grouting has been used almost exclusively by Novatecna and has been utilized on over 60 jobs throughout South America to construct about 50,000 m. of large diameter columns (2-3 meters in diameter).

Geometry of jet grouted bodies

8. Cylindrical bodies. The normal shape of soil-cement bodies obtained by any jet grouting method is approximately cylindrical, depending on thixotropy and the homogeneity of the soil. Generally, this body is designated a column. The diameters of the columns, in the same types of soil, depend on the injection parameters, which in turn depend on the available equipment, especially on the pumping system utilized.

9. The equipment normally used by Novatecna allows diameters of 1.2 m in applications of the CCP system and 2.2 m in applications of the JG system. It should be clear that diameters of about 2.00 to 2.20 m can be obtained with the CCP system provided adequate pumping equipment is used. This statement is valid for any type of jet grouting system in relation to formation of diameters larger than 2 m. The limit of the largest column diameter that can be reached with any of the various jet grouting methods will be of economical rather than technical order. A row of columns with a distance between their axes smaller than the diameter of each column forms a diaphragm wall.

10. Laminar bodies or panels. Another possible configuration of soil-cement bodies is the panel that is formed in soil when the drill/injection rod is removed without rotation.

11. Field tests were conducted in San Paulo, Brazil, in which panels were formed by the CCP method in clay and in granular material by the JG method. The tests showed that the CCP panels in clay resulted in slender triangular sections (Figure 5), and the JG panels in granular materials resulted in rectangular sections (Figure 6).

12. During the field tests which lead to the improvement of the JG technique, measurements were made to verify the dimensions of the panels. In the beginning it was noticed and proven in successive experiences that by using the same jetting parameters (Table 1), double radial ranges were obtained in relation to the column diameter. The individual panels have a width on the same order as the column diameter. A double panel equal in width to two times the column diameter is obtained with jets on opposing sides of the drill/injection rod.

13. After a number of field experiments in sand and clay undertaken in 1984 to 85, Novatecna has learned that the JG technique, can be used to form soil-cement panels with lengths of 1.80 to 2.20 m in single panels and 3.60 to 4.40 m in double panels with wall thicknesses from 0.20 to 0.40 m.

14. A test using the JG method was performed in March 1986, in two types of high-density artificial soils, one with normal and well-graduated grain size distribution, ranging from clay to 2-in. gravel, and the other made up of fine soils with medium sand and Portland cement with 40 percent in weight of stones from 1 to 7 in. in diameter. Columns with a diameter of approximately 1.40 m and panels with a minimum individual length of 1.50 m up to a maximum length of 1.80 m with wall thicknesses varying from 15 to 30 cm were obtained in this artificial soil medium.

15. Encouraged by these results and foreseeing specific uses, Novatecna has recently tested a soil-cement body consisting of two divergent double laminar panels (Figure 7) coupled by a column of small diameter. These panels were obtained by utilizing four jet nozzles set two-by-two in opposite directions (Figure 7). The maximum total length of the double panels in both types of soils was approximately 3.20 to 3.90 m. A row of laminar (single or double) panels with a distance between their axes less than twice the radius of each panel forms a diaphragm wall.

16. The cutoff wall formed by the double laminar panels seems to offer the following advantages over the column-type cutoff wall:

a. Due to the greater longitudinal extension of the individual body, larger interaxial distances can be established. This shape, therefore, should prove the most economical.

b. Due to the reduced mean thickness of the panel-type diaphragm wall, it should also be more economical to produce since the consumption of slurry will be lower.

Properties of soil-cement bodies formed by jet grouting

17. Homogeneity. By utilizing high-pressure pumping equipment, the in situ soil is pulverized and thoroughly mixed with the injected cement slurry and exhibits homogeneity comparable to a mortar or concrete. The resulting soil cement mixture is called soilcrete. In a subsoil composed of various layers of stratified material, the resulting soil-cement mixture will be homogeneous through each layer, presenting slightly different mechanical characteristics in each layer of strata. In the transition zone between the layers of strata, there will be a gradual change from one type of material to the next.

18. Permeability. Based on the results of several tests, it can be stated that the permeability of the soil-cement bodies is within the following limits:

$$10^{-8} \leq k \leq 10^{-6} \text{cm/sec}$$

19. Strength. The mechanical strength of the soil-cement depends on four factors:

- Type of soil.
- Cement quantity.
- Water/cement ratio.
- Curing time.

The purpose of including strength values in this report is to give some guidelines about expected strength ranges. Such values and relations should be considered merely indicative for the purposes of this report.

20. Guideline - values of compressive strength. The values of Tables 2 and 3 are defined as the average results obtained from a series of many unconfined compression tests performed on samples of cylindrical shape from various

soil types from Japan, Italy, Venezuela, Colombia, Brazil, and Argentina. The strength values ($kgf/cm^2$) are averages only. The values correspond to setting times of 30 and 120 days and are related to the cement quantities ($kg/m^3$) and the water/cement ratio of the consolidating slurry as indicated.

21. Table 4 presents preliminary correlations between the indirect tensile strength as measured in the diametral compression test (Brazilian Test) and the compressive strength as measured in the unconfined compression test.

## Considerations of Cutoff Walls from NOVATECNA Projects

### Porto Primavera Dam cutoff wall

22. The cutoff wall for a cofferdam over the Parana River, Sao Paulo, Brazil, 1982, was the first of its kind in the New World (Figure 8). Several test walls were made with 10- to 14-m depth to demonstrate the efficiency of the jet grouting system and to delineate other factors related to the project.

23. The cutoff wall was formed in alluvial sands with a 5- to 18-Standard Penetration Test (SPT) blow count. The soil included five continuous layers of firmly cemented conglomerate averaging in thickness from about 0.20 to 1.0 m. The maximum depth reached was 32 m.

24. Some important design aspects were:

- Drilling/injection - same unit - Ø 2-in. drilling rod.
- Column diameter ≦ 0.80 m.
- Cutoff wall in single rows except for one double row stretch parallel to river.
- Interaxial (center to center of columns = e) distance:

  Single-row sections e = 0.56 m.

  Double-row sections e = 0.60 m.
- Permeability of column material - $k \leqq 10^{-6}$ cm/sec.
- Longitudinal extension of cutoff wall - 2,000 m.
- Execution time - 140 days.

The other drilling parameters (nozzle pressure, lifting rate, cement consumption, etc.) used to form the CCP columns at Porto Primavera Dam are listed in Table 1.

25. The project was carried out based on solid soils data. The execution of the tests and studies took slightly more than a year.

26. Geometric specifications for this project (column diameter and column interaxial distances) were considered a valid antecedent and were adopted for the cutoff wall project later performed.

27. Two important observations resulting from information gained from the Porto Primavera project are:

a. In this particular alluvium type, the vertical drilling should be controlled by instruments so that interconnection of adjacent columns can be assured, and therefore, insure an efficient cutoff wall.

b. The jetting parameters should be selected as a function of soil characteristics (SPT) as the depth increases.

Mercedes Benz pit

28. The structural cutoff wall for a pit to be excavated in soft, submerged soil in Sao Paulo, Brazil, 1982, presented no verticality problems due to the limited column depth and the excellent soil properties (Figure 9). In spite of the specified interaxial distance of 0.75 m between the columns of 0.80 m diameter, the cutoff wall formed with four-column rows resulted in perfect sealing. The 80 cm diameter columns were formed using the drilling parameters cited in Table 1. The structural strength was excellent.

Dalmine Siderca pit

29. A structural cutoff wall was built for a pit to be excavated in soft, submerged soil in Buenos Aires, Argentina, 1984, as shown in Figures 10 and 11. This pit, as far as we know, was the first to be performed to this depth (7.40 m) utilizing jet grouting, employing the drilling parameters listed in Table 1. The results, both technical and economical, were excellent.

30. With the knowledge and experience accumulated in the last two years, the authors feel that it would be possible to achieve comparable results using JG and fewer columns than needed for the CCP wall.

Capivari pit

31. A structural cutoff wall was constructed as a cylindrical shaft 12 m in diameter, excavated in soft, submerged soil for the Companhia de Saneamento Basico do Estado de Sao Paulo, Brazil (SABESP), 1986, as shown in Figure 12.

32. Vertical drilling control was not necessary for two reasons:

a. The drill/injection unit performed in a satisfactory manner in the soil type encountered over the 9 m depth required by the design.

b. For structural reasons, the cutoff wall was designed with two rows of columns. The results of this project were excellent.

Edgard de Souza Dam cutoff wall

33. The cutoff wall for this dam across the Tiete River, Sao Paulo, Brazil, 1985, was a relatively small job (2,870 m of CCP columns) designed to connect the river bank with a reinforced concrete cofferdam (Figure 13). The soil to be treated was sand at the bottom and clayey fill above. A double row of columns was utilized to form the cutoff for the Edgard de Souza Dam, which was similar to the design concept used for the Porto Primavera Dam. However, the time spent jetting the CCP columns at Edgard de Souza Dam was only 2.9 min/m, as indicated in Table 1, which resulted in a column which was about 7/8 the size of the CCP columns used for the Porto Primavera Dam.

34. Vertical drilling control was unnecessary in this project due to the shallow depth (8 m) and the excellent soil properties. A double row of columns was specified due to the probability of encountering granite blocks at the lower extremities of the drill holes. The resulting cutoff wall was considered an excellent example of both efficiency and economy.

Banco Itau pit

35. The structural cutoff wall for subsurface work, Banco Itau, Sao Paulo, Brazil, 1986, was the first diaphragm wall constructed in Brazil using the JG method. The designer selected an interaxial distance of 1.20 m, foreseeing a nominal column diameter of 1.40 m. There were no verticality problems with this endeavor due to the shallow depth required.

36. The site for Banco Itau was a former gasoline station. The soil in some areas had become contaminated with spilled oil and gasoline which prevented the cement slurry from hardening. It is imperative to perform a chemical analysis of the soil to detect the presence of petroleum products, sewerage, etc. as well as geotechnical investigations.

Piedra del Aguila cutoff wall

37. Two basic concepts essential for the effective design of a deep jet-grouted cutoff wall are:

a. The minimum guaranteed dimension of the soilcrete body.

b. The guaranteed maximum limit of deviation from the vertical of the soilcrete body.

NOVATECNA has used these two concepts as a basis for designing a unique alternative procedure for difficult, very deep cutoff wall in Patagonia,

Argentina, at the Piedra del Aguila site where a concrete dam is presently under construction on the Rio Limay.

38. Sometime in the remote past, an undetermined geological incident occurred which diverted the Rio Limay to its present course. The original paleocauce (ancient riverbed) is almost immediately adjacent to the present river valley, and is now completely filled with quite diversified soil-types lying in random, mixed strata of irregular dimensions to a depth of approximately 180 m below the upper surface, which, in the area involved, is completely covered with a layer of basalt to a depth of -60 to -80 m and with an expanse of about 1,100 m. The level of the future lake is expected to be 30 to 40 m above the upper surface of the paleocauce; a cutoff wall through it is imperative.

39. The solution suggested or specified by the contract documents calls for impregnating the alluvium with grouting substances by means of low-pressure injection to be implemented from two horizontal tunnels, one near the bottom of the basalt layer, the other 120 m above the bottom layer of the paleocauce.

40. The difficulties facing the contractors in trying to transform the specified solution into a workable, cost-efficient procedure gave NOVATECNA the impetus to develop an alternate concept and design. We decided to design a jet-grouted cutoff wall performing all necessary operations from the upper surface of the basalt cover and to take advantage of the excellent performance of our JG method.

41. For Novatecna, the design of jet-grouted cutoff walls consists essentially of making the proper decisions regarding three aspects:

- a. The choice of the type of soilcrete body (column or panel) and the definition of the pertinent minimum column diameter or panel extension actually obtainable in the soil context of the specific case.
- b. Fixing the proper spacing between axes (interaxes) of the contiguous soilcrete bodies.
- c. Whether the wall should consist of single- or multiple-row bodies, and if multiple rows are chosen, between which levels they should be executed.

In this project, the third aspect was not a consideration because no structural reason existed which required a multiple-row wall.

42. Our initial study of the problem resulted in some conclusions based on the first two aspects stated above in a and b:

a. Taking into account the difficulties inherent in drilling the axial holes for the soilcrete bodies through the basalt layer and the alluvium, the panel-type body was preliminary chosen (subject to confirmation by a technical feasibility study now underway).

b. The interaxis spacing would obviously depend on the minimum guaranteed extension of the deviated panels and would depend as well on the actual guaranteed limit of maximum deviation from vertical attainable at the depths involved.

43. To further define and examine these three interconnected aspects, Novatecna decided to test the performance of the JG method in representative samples of the soils involved and to transfer the solution of the drilling problems to a highly specialized group: the oil well drillers. We were able to interest a highly qualified oil field, mining, and deep-water service company, Dresser-Atlas, in our concepts; and early this year, they began studying the drilling problems, while we in Brazil performed our soil tests.

44. The highly respected engineer, Professor Victor de Mello, former president of the International Society of Soil Mechanics and Foundation Engineering, studied the situation and gave us his support. After a careful analysis of the available geological and geotechnical information from the site, he specified two types of soil from those present in the paleocauce alluvium for the tests:

a. Type A. A duly proportioned mixture of components-clays, silts, sand and gravel, and pebbles with grain sizes up to 2 in. and a moisture content between 10 and 15 percent. The specified density to be no less than 2.2 to 2.4 $t/m^3$ (125 to 136 pcf).

b. Type B. This soil is composed of a matrix of sand mixed with clayey silt and 5 percent in weight, dry Portland cement, 40 percent in weight, granitic gravel, pebbles, and cobbles ranging from 1 to 8 in. in size.

These soils were representative of the lower portion of the paleocauce's sediments.

45. The components for these soils were collected from a large quarry near Sao Paulo, Brazil, then compared and verified by a highly qualified laboratory; and an embankment was carefully prepared to the specified densities. The dimensions of the embankment were large enough to allow the symmetrical formation of six flat double panels and three columns in each type soil (A and B) to test various jetting parameters. The excavated embankment gave evidence of excellent soilcrete bodies. Panels with a single-sheet extension of up to

1.4 m were observed. Then using another set of jetting parameters, panels with a single-sheet extension of up to 1.8 m and columns with 1.4 m diameters were obtained.

46. After a detailed study of the soilcrete bodies obtained in these tests, we considered the results to be quite satisfactory in terms of the dimensions of the bodies and the quality of the soilcrete material relative to the severe conditions they were to withstand.

47. Meantime the Dresser-Atlas team had arrived at the following conclusions:

a. It is possible to drill the necessary holes for the cutoff wall within the soil context of the paleocauce, meeting the special requirements of very tight tolerances in vertical deviation.

b. Even with the thick basaltic cover layer, it is possible to keep the maximum deviation of the holes at the maximum depth of the paleocauce within the required limit of 50 cm.

c. Tools exist that are capable of meeting today's stringent requirements for directional surveying of drilling and precise well bore positioning. Special sensors assure measurements of 0.1° azimuth and 0.05° inclination, independent of magnetic influence. Tight directional control during the drilling operation is a matter more closely related to cost than technical possibilities.

d. Taking into account the number of holes required and the relatively limited amount of time available, the Dresser-Atlas team designed a satisfactory, rapid drilling program at acceptable cost.

48. At this point, then both the basic concepts of the minimum guaranteed dimensions and the maximum guaranteed deviation limits were verified. With this information, we can proceed with the design of the cutoff wall.

49. Based on the results of our Sao Paulo tests, the use of the panel-type soilcrete body was confirmed. A reduction factor of 25 percent was applied to the minimum extension obtained in the tests to define the guaranteed minimum extension of the panels to be used for the actual design of the cutoff wall. In this case, the design extension for the individual panels was 1.2 m.

50. Theoretically, an adequate interaxis is the maximum horizontal spacing that will safely assure a sufficient continuous seal between contiguous panels (or columns) for the entire depth of the cutoff wall even in the event of maximum allowed deviation between their axes. The operational procedure that in our opinion seems suitable for effectively implementing a

condition of continuous connection consists of first injecting two jumbo grout double panels (odd panels), spaced sufficiently far apart so that an intermediate panel (even panel) can be jetted and used to assure a continuous cutoff as shown in Figure 14.

51. By monitoring the drilling operation, it is possible to determine the actual positions of the axes of the odd panels with respect to the deviations. Taking advantage of this information, then any even body may be accurately located in position between two contiguous odd bodies so as to compensate for the effects of the odd panel deviations by means of the even panels dimensions and deviations, thereby producing the required continuous connections all along the cutoff wall to ensure sealing.

52. Perhaps we should further clarify the term adequate interaxis. The spacing between two contiguous bodies should be such that even for the most unfavorable conditions of deviation (maximum allowable in the design) two contiguous bodies, a satisfactory compensation to ensure sealing of the wall could be made by means of the intermediate even body by proper positioning when drilling its axis.

53. This definition is valid if the soilcrete bodies are columns; in fact, since we know the design diameter and limit of maximum vertical deviation of the boreholes, it becomes a simple matter to determine the interaxes that satisfy the sealing requirements. (It is interesting to point out that as we are dealing with design extensions of bodies with maximum allowable deviations, we could consider tangency between contiguous bodies, i.e., zero overlapping, an acceptable situation.)

54. With the case under consideration, the type of cutoff body chosen was a double divergent panel (see Figure 7). For this type of soilcrete body we may add something to the definition of adequate interaxis:

> The spacing should be such that even in the most unfavorable case of deviation (within maximum design limits), satisfactory compensation could be made by means of the intermediate even body by proper positioning when drilling its axis; and depending on the orientation and deviation of its own borehole, by adjusting as necessary between the pairs of divergent jets, the resulting panels will ensure the continuous sealing of at least one row of panels.

55. In cases of extremely adverse conditions of deviations such that compensation by means of one intermediate body would not be considered prudent, then two bodies properly located between the two deviating odd bodies

should provide adequate sealing. In this particular case we would determine by tests the adequate interaxis spacing.

56. The convenience and economy of the panel-type jet grouted cutoff wall described are evident if we compare it with a hypothetical solution using column-type bodies. Assuming columns with a minimum effective diameter of 1.3 m (minimum radius of 0.65 m) and applying the same reduction factor of 25 percent, the minimum guaranteed design column radius would be 0.49 m, comparable to 1.2 m of the panels single-sheet extension. However, aside from the fact that a design radius of 0.52 m is very likely not compatible with a limit of maximum deviation of 0.5 m, we see that even supposing the possibility of drilling the holes perfectly vertical, the column-type wall would require more than twice the number of boreholes required by the panel-bodied wall and would need a much larger quantity of cement as well.

57. We have presented the criteria used in the preliminary design of the Piedra del Aguila cutoff wall. We feel that the criteria presented are valid and should be considered, where applicable, for constructing jet-grouted cutoff walls.

Final comments on the selected projects

58. The verticality control of the drill holes was not considered in any of the reported cases with the exception of the Porto Primavera and Piedra del Aguila projects.

59. In the other cases, where the columns were visible after excavation, it was obvious that in the range of depths encountered (up to 15 m), perforation in soft soils by the drill/injection unit resulted in excellent verticality. Visual inspections have allowed us to prove that the effective column diameters were consistent with the theoretical forecast of the project.

60. The satisfactory results achieved, indicated that the choice of the column interaxial spacing was correct.

## Recommendations for Jet-Grouted Cutoff Walls

Essential concepts for design

61. Soil characteristics. Soil characteristics are usually the first available data. The geological and geotechnical information should be complete. Data sampling frequency should be on par with the complexity of each job.

62. Cutoff wall efficiency. This aspect should be previously fixed by the designer. The relevant information consists of:

a. The underground water levels up and downstream from the panel.

b. The maximum head loss the cutoff should provide in relation to the upstream water level.

The head efficiency of a cutoff panel (ratio of head loss between points immediately upstream and downstream of the cutoff wall at its junction with the base of the dam to the head loss across the dam expressed as a percentage) is generally established to be between 70 and 80 percent.

63. Guaranteed limit of deviation related to the verticality of the drill holes. The guaranteed limit of deviation depends on the drilling equipment and method adopted as well as the maximum depth of the cutoff wall and the soil type.

64. The drill/injection unit normally used for jet grouting can drill directly into clays, silts, sands, and mixed soils up to 30 m. For greater depth requirements or perforations in alluvial soils containing gravel and/or stones, it may be necessary to drill holes previous to treatment by means of equipment especially designed for each specific case.

> Example: To drill to 13 m depth in soil made up of 70 percent rolled pebbles of 0.5 to 5-in. diameter in the Limay River bed in Patagonia, we utilized Stanwick equipment. Drilling through 80 m of basalt underlying 180 m of heterogeneous alluvial deposit required the use of equipment such as that used for drilling oil wells.
>
> In each case, however, it should be possible to define by means of previous testing the guaranteed limit within an acceptable safety margin for the drilling deviation (in relation to the vertical requirements) in the specific context of the cutoff wall to be designed.
>
> The word guaranteed makes sense insofar as dimension, direction, and level of the deviations could be verified by adequate instrumentation. The term guaranteed limit should be compatible with the resources available for the JG method to be applied in the cutoff formation to obtain the required sealing within economical limits. This guaranteed limit should also be the one allowed or compatible in individual cases.
>
> The best equipment available should be utilized to assure minimum deviation within the acceptable limits at maximum depth. This information should be available when the cutoff wall is designed.

65. Minimum guaranteed soil-cement body dimensions. When choosing the JG method to be utilized, the designer must take into consideration the minimum dimensions of the treated soil bodies obtainable within the soil conditions encountered.

66. The minimum guaranteed dimensions (diameter of columns or length of panels) to be considered for the definition of the cutoff wall geometry will result in the selection of a reduction factor for the minimum dimensions. (The one that is based on previous in situ tests could be obtained at any point along the consolidated bodies in actual soil conditions.) The maximum allowed guaranteed deviation and the minimum guaranteed dimension of the consolidated bodies forming the cutoff wall will constitute the basis of the design for the wall.

67. Quite often, complete soils information is not available during the initial design phase. If this is the case, the designer must complete his preliminary work based on the information at hand but should require that adequate field testing be completed and the results be made available prior to final design of the cutoff wall.

68. Basic requirements for an in situ diaphragm wall test. The aspects that must be considered in performing an in situ test should include the following:

- Analysis of available geotechnical data - usually provided by the client.
- Discussion and definition (with the client) of the limits the diaphragm wall must ensure.
- Definition of stresses the wall may have to tolerate under various circumstances.
- Design of the cutoff wall (preliminary).
- Location, shape, and extent of wall.
- Minimum characteristics - strength, modulus of deformation, permeability of the injected soil-cement bodies in relation to the various soil types it will encounter, acceptable tolerance ranges.
- Shape of soil-cement bodies forming cutoff wall.
- Criteria for definition of interaxial spacing.
- Analysis of resistance conditions expected.

69. The formation process of the test wall consists of the following:

- Drilling of alluvial mass and bedrock.
- Type of drilling.
- Equipment, tools, and materials.
- Sequence of operations.
- Productivity range.

- Necessary inputs.
- Drilling verticality.
- Maximum acceptable vertical deviation of drilling.
- Methods of ensuring verticality.
- Instrumentation and methods to control verticality.
- Checking routines.
- Procedures to correct effects of eventual tolerance deviations.
- Utilization of DACTEST instruments (monitor which continuously records the depth of hole, rotation speed, torque, flow rate, and water loss during drilling).
- Jet grouted trial diaphragm wall.
- Procedure and ranges of foreseen parameters for the execution of diaphragm wall tests.
- Range of cementing materials consumption.
- Equipment.
- Coordination of cementing operations and drilling operations.
- Procedures for correcting the effects of deviations occurring during drillings.
- Necessary support and inputs.
- Routines for checking operating parameters.

70. Control of diaphragm wall efficiency is accomplished by:

- Proving rates of efficiency and acceptable tolerance range of the diaphragm wall.
- Instrumentation programs and proposed surveys to establish efficiency rates in the trial diaphragm wall.
- Conclusions from results of the trial diaphragm wall.
- Procedures to correct eventual faults in efficiency of the diaphragm wall and controlling the efficiency of such corrections.
- Preliminary program for controlling the efficiency of final diaphragm wall.

71. Time must be allotted:

- For design, execution, and test of diaphragm wall.
- For final diaphragm wall.

72. Among the costs involved is:

- Final cost to be drawn up with general contractor.

Design guidelines

73. The design of a jet grouted cutoff wall consist essentially of decisions concerning:

a. The kind of consolidated-body which will form the wall, characterized by the shape and correspondent minimum dimension.

b. The horizontal distance which will separate the axes of the overlapping bodies.

c. Whether the wall should be composed of single or multiple columns, and if multiple rows of columns are specified, between which underground levels they should be injected.

74. The relevant decisions concerning aspects (a) and (b) are closely interconnected, and for the same technical result of possible alternatives, the decisions should be directed to the most convenient economical solution. It is essential that the designer should have available the basic information regarding the minimum dimensions of possible alternative bodies and the limit of maximum deviations that can be obtained as well as the approximate cost of these alternative components.

75. The relevant decisions concerning aspect (c) when impervious cutoff walls are involved can be applied to particular situations, but not required to assure the best performance of their sealing functions. The columns should be sufficiently connected so that in the worst situation of reciprocal verticality deviation of two adjacent columns, there should still be a minimum safety connection or overlapping between them. The worst situation of reciprocal verticality deviations between two contiguous bodies is determined by the positions of the axes of those bodies when both show maximum deviation and are oriented in the most adverse directions.

76. Keeping in mind the technical condition mentioned above, in our opinion the alternative ways for a satisfactory definition of the basic design decisions could be as follows:

a. To predetermine one fixed interaxial distance compatible for the type of body selected based on the economical convenience, and to determine by trial simulating adverse positions of the overlapping bodies, which should be the minimum range (diameter in the case of a column, or length in the case of a panel) that should be guaranteed to these bodies or to satisfy the design requirements.

b. To define the type of body which will form the panel and the respective minimum range that could be guaranteed in the soil context of the job site, then to determine which should be the more convenient interaxial distance that satisfies the design requirements.

77. It is important to emphasize that the analysis should consider the cutoff construction process. First, the odd bodies are formed, then the even bodies (see drawing on Page 87). The even bodies should be localized in such

a way that each one compensates for effects of the deviation on the two adjoining odd bodies.

78. In cases of extremely adverse situations of reciprocal verticality deviation of two adjacent odd body axes, a satisfactory compensation may be accomplished by means of two even bodies rather than one in their respective positions.

79. For the column-type diaphragm wall, the specified procedures are simple and quick. However, when using the double laminar panels (Figure 7), the procedures are not so simple and a special computer program should be developed to aid in determining the proper procedures. The suggested procedures imply the absolute necessity to know the direction of the deviation in terms of dimensions, orientation, and location in relation to the vertical.

80. In short, the fundamental criteria that in our opinion should be taken into account for this type of project are:

- o Design the diaphragm wall according to minimum guaranteed dimensions of the consolidated bodies.
- o The safety factor adopted to transform the minimum dimensions into minimum guaranteed dimensions should be fixed by the designer.
- o Design the diaphragm wall taking into account the maximum compatible deviation in function of the diaphragm wall depths and in determining the correspondent controls.

This concept implies that if a diaphragm wall has variable depths, the design could foresee larger interaxial distances in shallower depths.

## Verticality Deviations and Corrections for Sealing Between Two Laminar Double Panels of Odd Order

81. Figures 14 to 16 illustrate examples of (a) theoretical location of adjacent panels without deviation, (b) location of even bodies to compensate deviation of odd bodies, and (c) jets location of even bodies that also had a maximum deviation to compensate maximum deviations of odd bodies, respectively.

Table 1

Jetting Parameters

| Porto Primavera Dam (CCP System) | |
|---|---|
| Pressure | 5,000 psi |
| Time | 4.1 min/m |
| Nozzle | 2 Ø 1.8 mm |
| Slurry Quantity | 62 ℓ/min |
| Cement Consumption | 140 kg/m |
| Water/Cement Ratio (Dry Weight) | 1.5 : 1 |
| Column Diameter | 80 cm |

| Mercedes Benz Pit (CCP System) | |
|---|---|
| Pressure | 5,000 psi |
| Time | 3.75 min/m |
| Nozzle | 2 Ø 2.2 mm |
| Cement Consumption | 375 kg/m |
| Water/Cement Ratio (Dry Weight) | 0.8 : 1 |
| Column Diameter | 80 cm |

| Dalmine Siderca Pit (CCP System) | |
|---|---|
| Pressure | 5,000 psi |
| Time | 3.33 min/m |
| Nozzle | 2 Ø 1.8 mm |
| Cement Consumption | 150 kg/m |
| Water/Cement Ratio (Dry Weight) | 1.1 : 1 |
| Column Diameter | 70 cm |

(Continued)

Table 1 (Concluded)

| | |
|---|---|
| Edgard de Souza Dam | |
| Pressure | 4,200 psi |
| Time | 2.9 min/m |
| Nozzle | 2 Ø 1.8 mm |
| Cement Consumption | 125 kg/m |
| Water/Cement Ratio (Dry weight) | 1 : 1 |
| Column Diameter | 70 cm |
| Capivari Pit | |
| Pressure* | 4,300 psi |
| Time* | 2.9 min/m |
| Grout Injection Rate* | 118 ℓ/min |
| Nozzle* | 2 Ø 2.4 mm |
| Pressure | 4,300 psi |
| Time | 2.9 min/m |
| Slurry Quantity | 279 ℓ/m |
| Grout Injection Rate* | 95.6 ℓ/min |
| Cement Consumption | 212 kg/m |
| Water/Cement Ratio (Dry Weight) | 1 : 1 |
| Column Diameter | 75 cm |

* Pre-rupture using only water as the jetting material.

Table 2

Jet Grouted Soilcrete in Fine Soils

| Type of Soil | Water Cement Ratio (Dry Weight) | Cement Quantity $kg/m^3$ | Unconfined Compressive Strength $kgf/cm^2$ Curing Time, Days 30 | 120 | Cement Quantity $kg/m^3$ | Unconfined Compressive Strength $kgf/cm^2$ Curing Time, Days 30 | 120 | Cement Quantity $kg/m^3$ | Unconfined Compressive Strength $kgf/cm^2$ Curing Time, Days 30 | 120 |
|---|---|---|---|---|---|---|---|---|---|---|
| Clay | 0.8:1 | 530 | 15 | 38 | 700 | 20 | 50 | 880 | 25 | 62 |
| Silty Clay | 0.8:1 | 390 | 20 | 45 | 520 | 26 | 59 | 650 | 32 | 73 |
| Clayey Silt | 0.8:1 | 390 | 25 | 50 | 520 | 32 | 65 | 650 | 40 | 80 |
| Silt (Inorganic) | 0.8:1 | 300 | 50 | 60 | 400 | 68 | 80 | 500 | 85 | 100 |

Table 3

Jet Grouted Soilcrete in Sandy Soils

| Type of Soil | Water Cement Ratio (Dry Weight) | Cement Quantity $kg/m^3$ | Unconfined Compressive Strength $kgf/cm^2$ Curing Time, Days 30 | 120 | Cement Quantity $kg/m^3$ | Unconfined Compressive Strength $kgf/cm^2$ Curing Time, Days 30 | 120 | Cement Quantity $kg/m^3$ | Unconfined Compressive Strength $kgf/cm^2$ Curing Time, Days 30 | 120 |
|---|---|---|---|---|---|---|---|---|---|---|
| Sandy Silt | 1:1 | 300 | 60 | 72 | 400 | 80 | 94 | 500 | 100 | 115 |
| Silty Sand | 1:1 | 300 | 70 | 84 | 400 | 95 | 111 | 500 | 120 | 138 |
| Sand | 1:1 | 300 | 85 | 102 | 400 | 120 | 140 | 500 | 150 | 173 |
| Sand with Gravel | 1:1 | 300 | >100 | >120 | 400 | >150 | >180 | 500 | 200 | >230 |

Table 4

Soilcrete Properties

| Type of Soil | Ratio of Tensile Strength to Unconfined Compressive Strength | |
|---|---|---|
| | Experimental Range | Conservative Range |
| Clay | 0.18 - 0.36 | 0.18 - 0.20 |
| Silty Clay | 0.16 - 0.32 | 0.16 - 0.17 |
| Clayey Silt | | |
| Inorganic Silt | - | 0.14 - 0.15 |
| Sandy Silt<br>Silty Sand | 0.11 - 0.26 | 0.12 - 0.13 |
| Sand | 0.08 - 0.16 | 0.10 |
| Sand with Gravel | - | 0.08 |

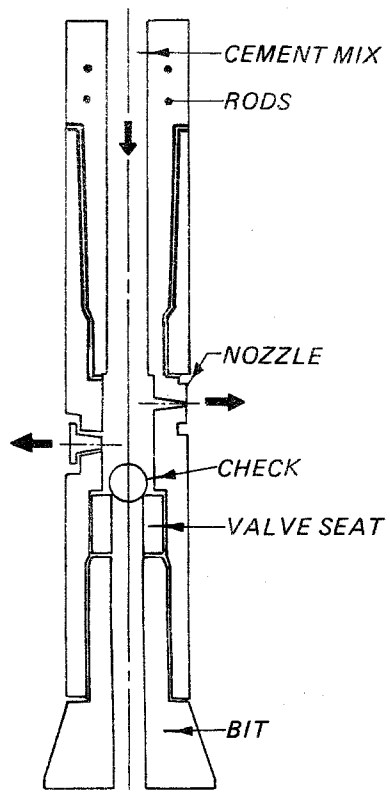


Figure 1. Single-rod system

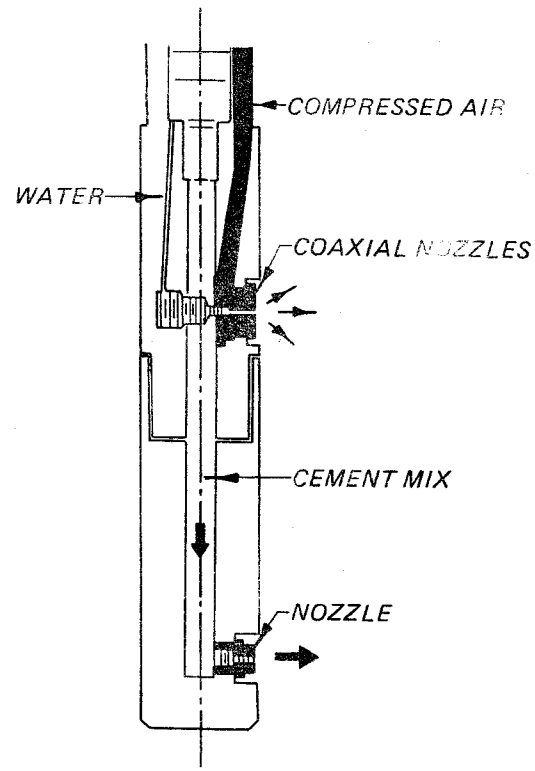


Figure 2. Three-concentric-rod system

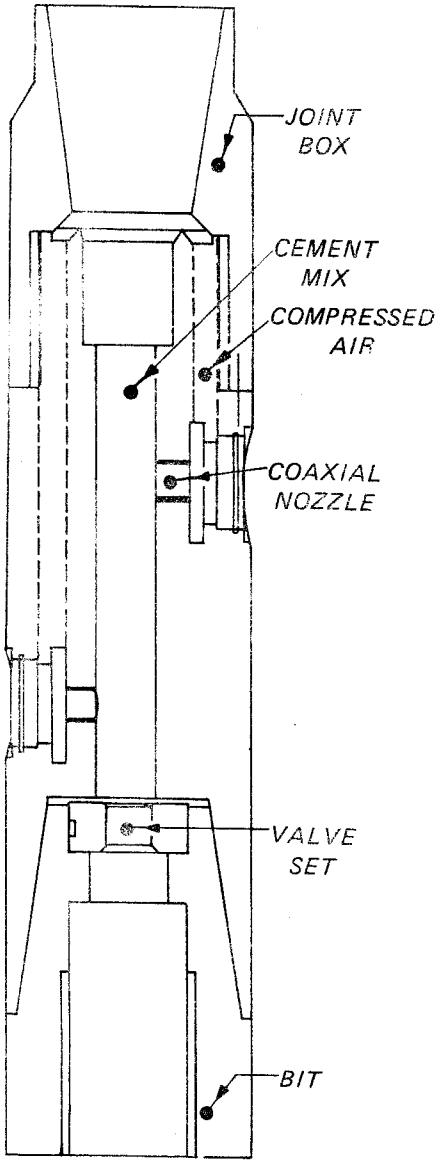


Figure 3. Double-rod system

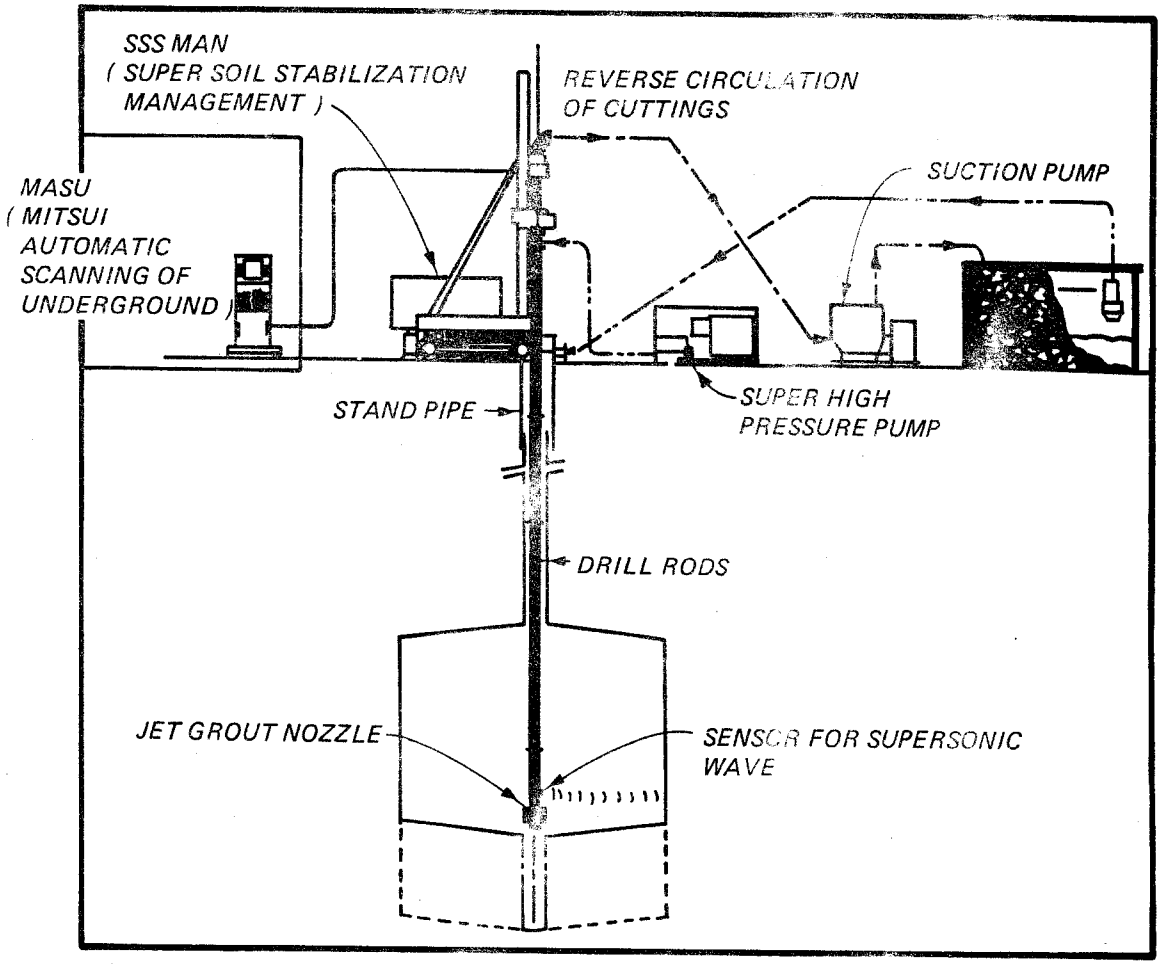


Figure 4. The SSS MAN method

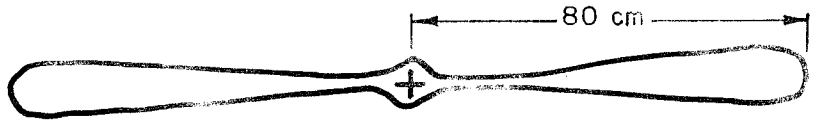


Figure 5. Typical CCP panel in clay

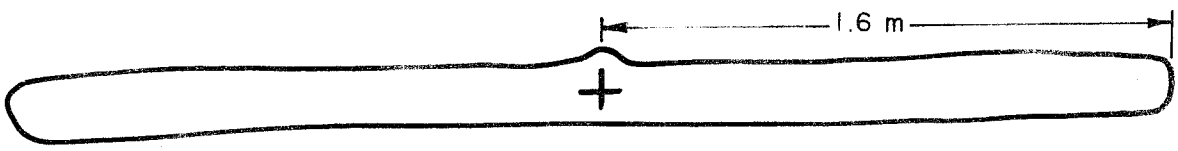


Figure 6. Typical JG single panel in granular soils

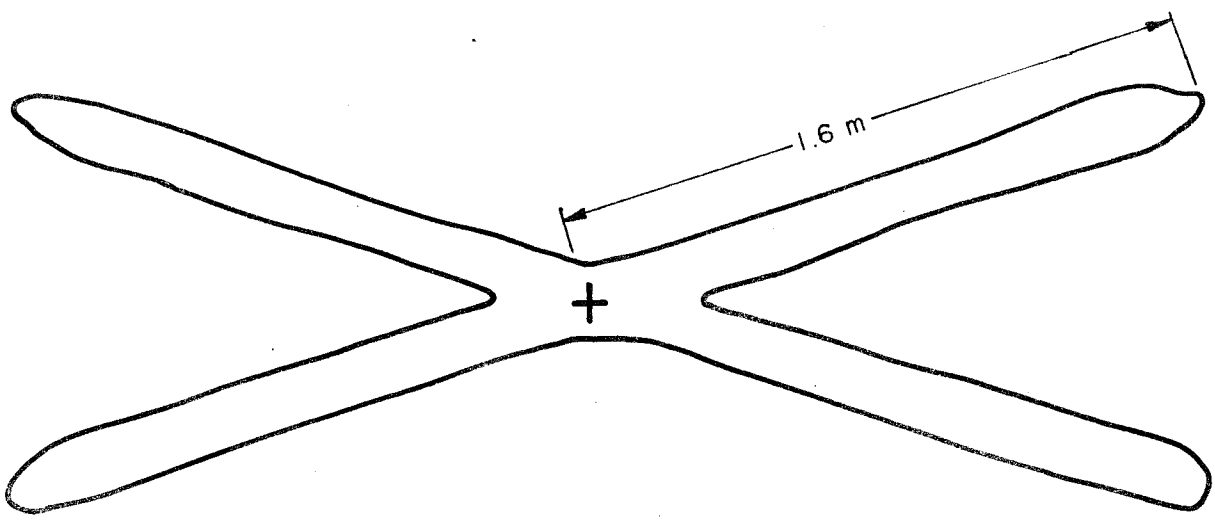


Figure 7. Typical JG double panel in granular soils

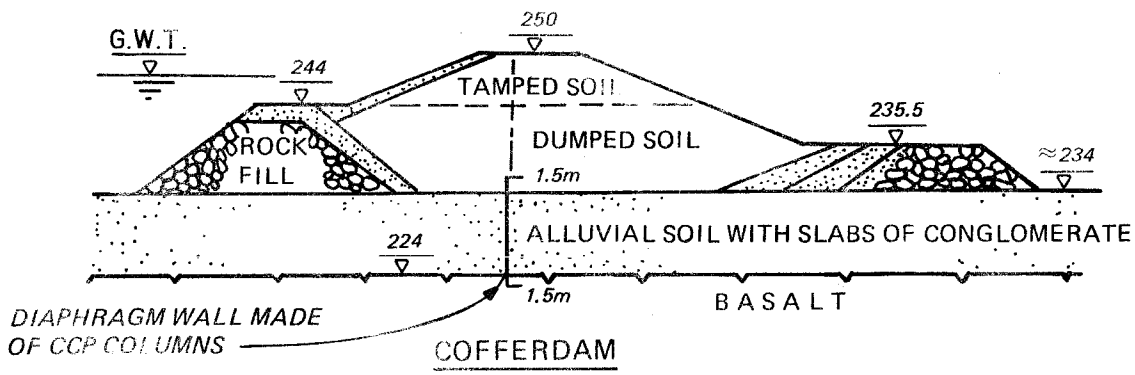


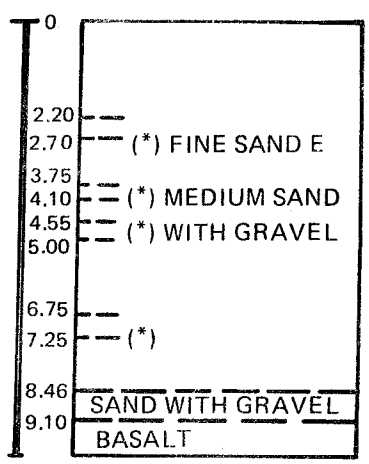


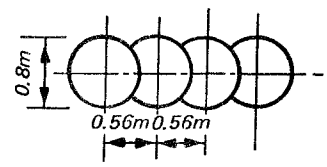


SINGLE WALL

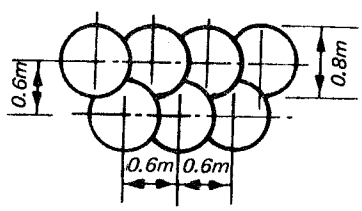


DOUBLE WALL

REPRESENTATIVE ALLUVIAL PROFILE

METERS OF CCP COLUMNS : 28,000
CONSTRUCTION TIME : 140 DAYS

Figure 8. Porto Primavera cutoff wall for a cofferdam over the Parana River, Sao Paulo, Brazil

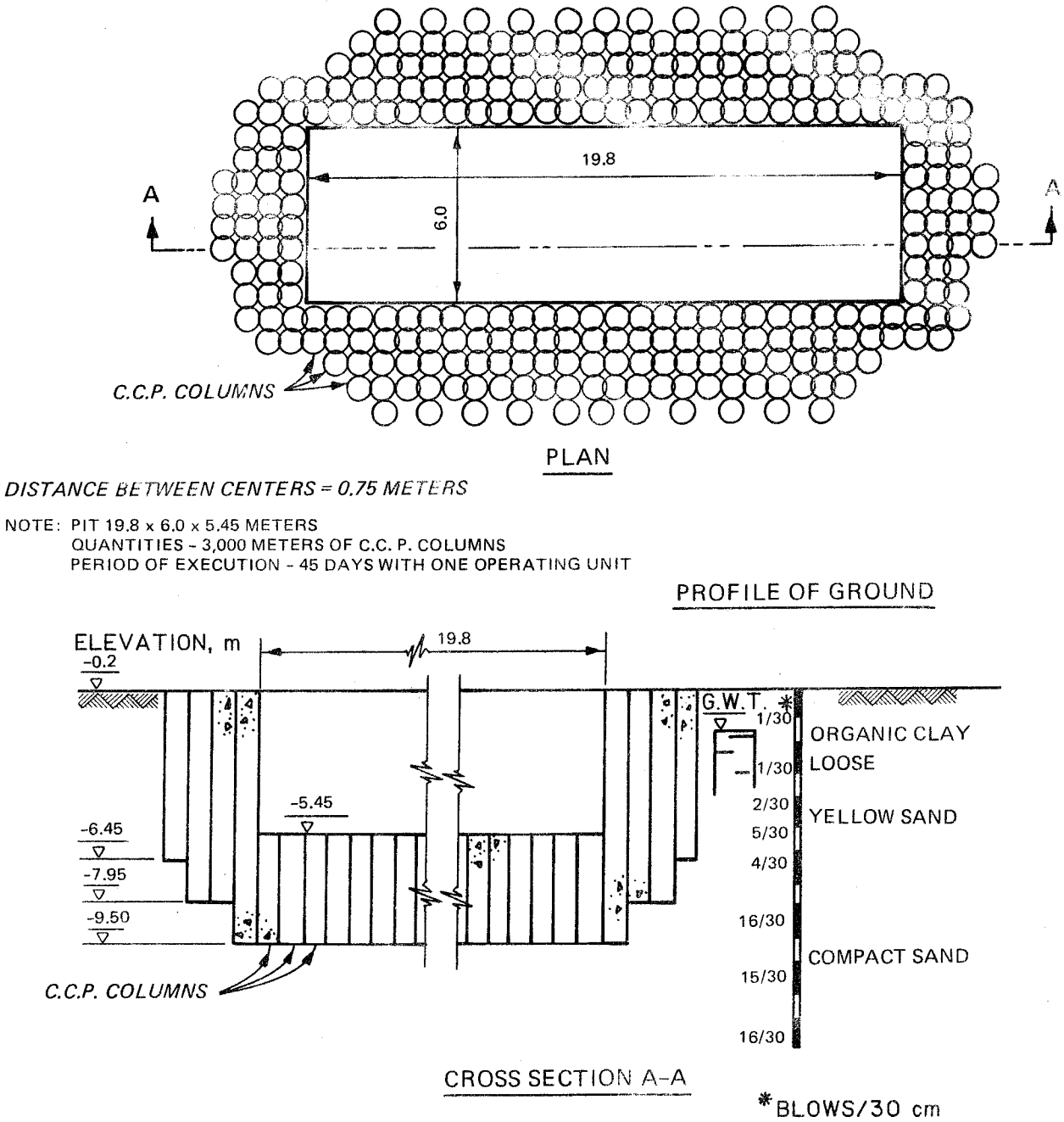


Figure 9. Structural cutoff wall for Mercedes Benz pit, Sao Paulo, Brazil

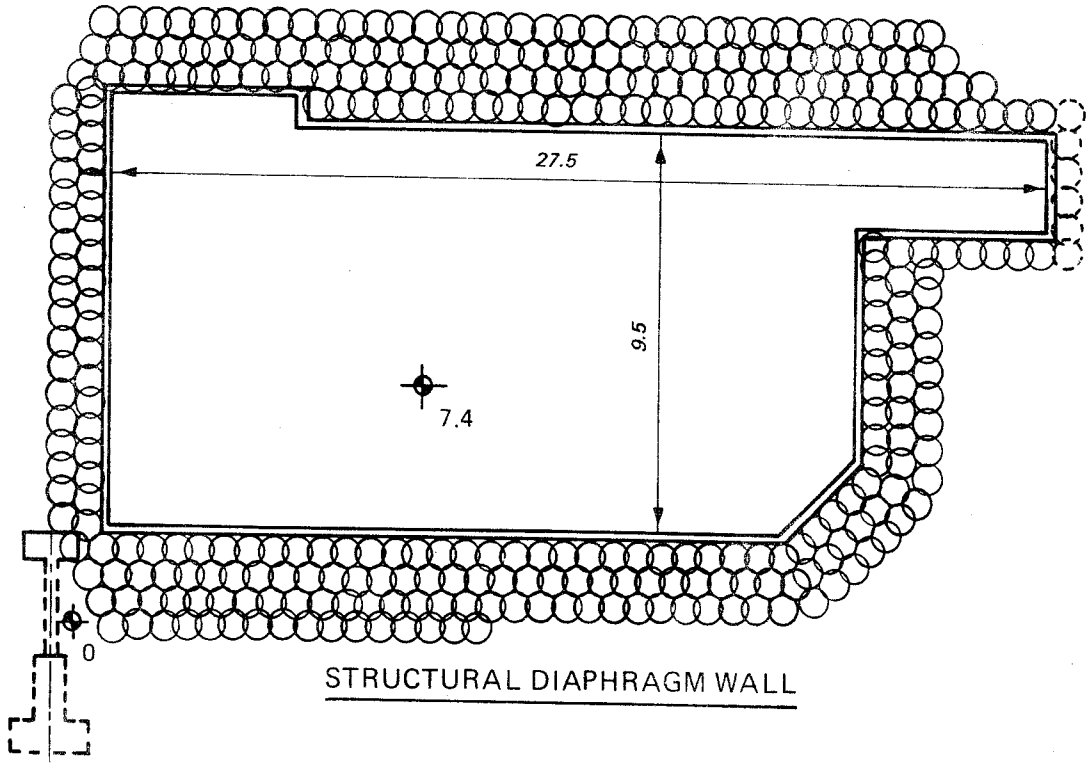


NOTE: PIT: 21.5 x 9.5 x 7.4 METERS
QUANTITY - 4,000 METERS OF C.C. P. COLUMNS
PERIOD OF EXECUTION - 30 DAYS WITH ONE OPERATING UNIT

Figure 10. Structural cutoff wall for the Dalmine Siderca pit, Buenos Aires, Argentina

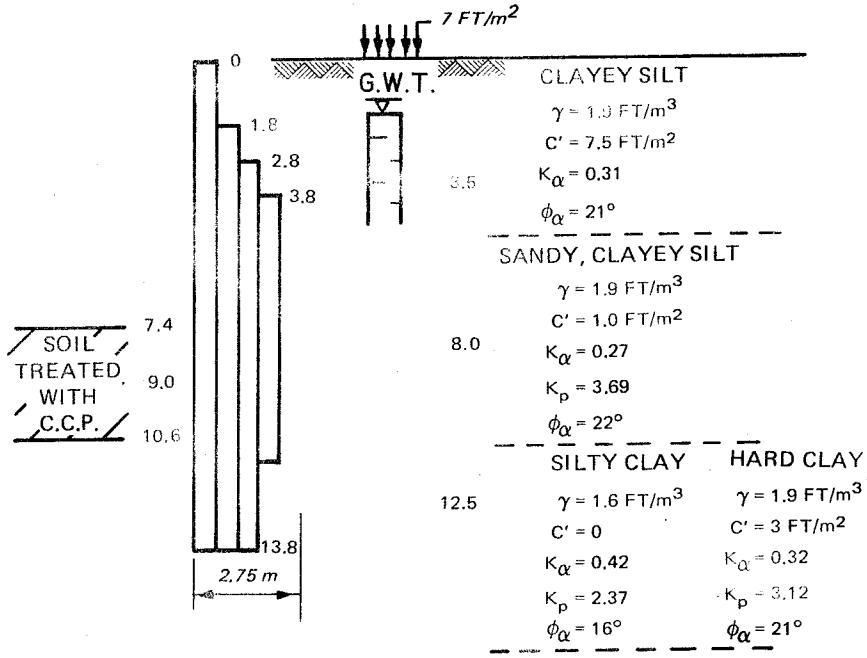


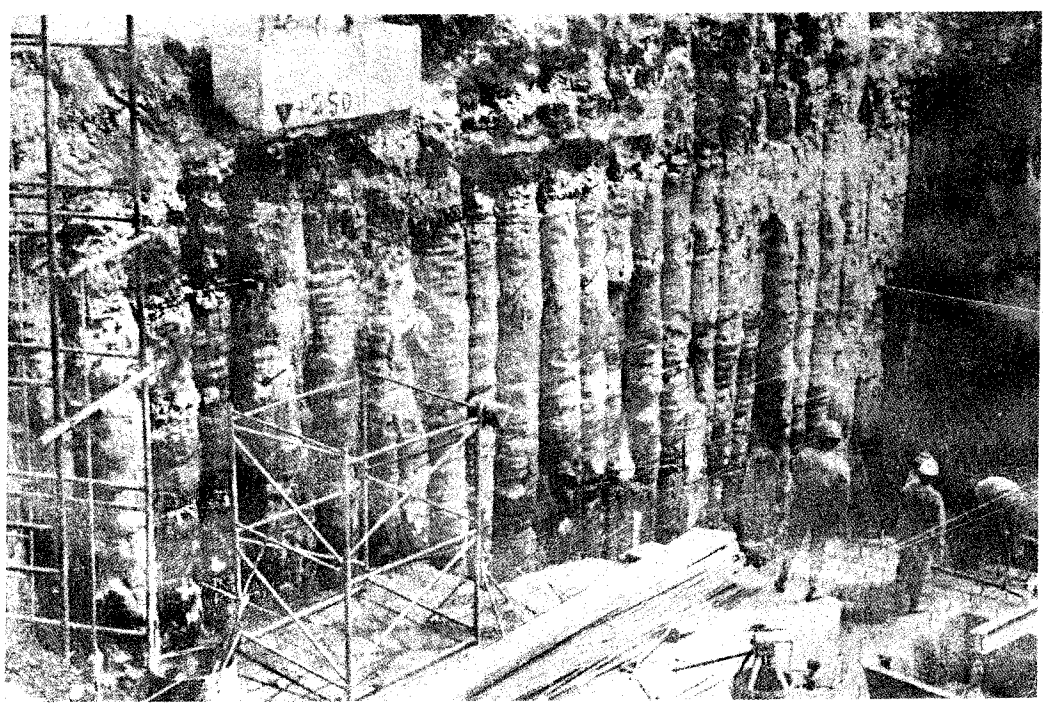

Figure 11. Inside the Dalmine Siderca pit after completion of cutoff wall, Buenos Aires, Argentina

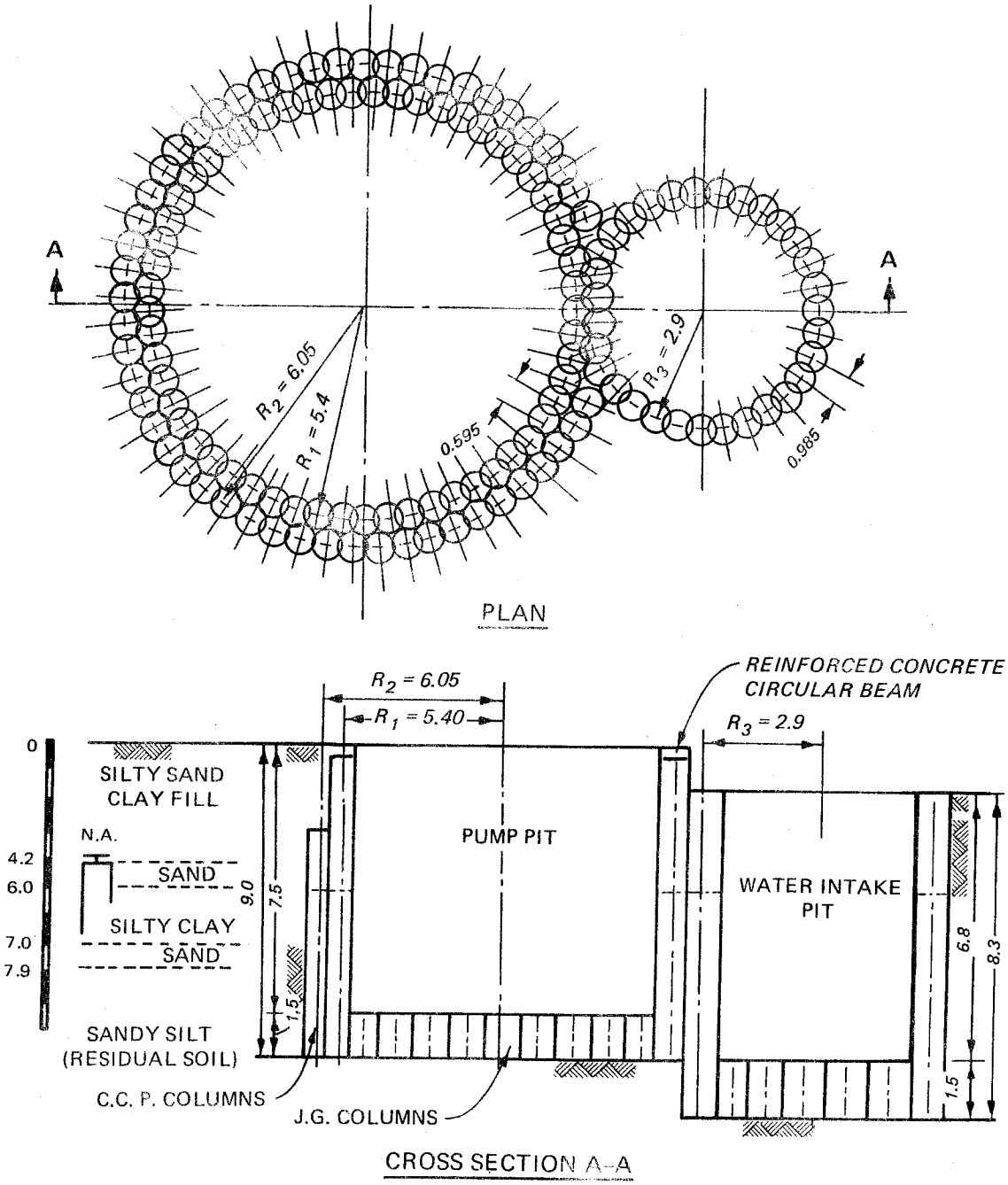


NOTE: QUANTITIES - 426 SQUARE METERS OF C.C. P. COLUMNS
103 SQUARE METERS OF J.G. COLUMNS
PERIOD OF EXECUTION - 15 DAYS

Figure 12. Structural cutoff wall for a cylindrical wall for the Capivari pit, Sao Paulo, Brazil

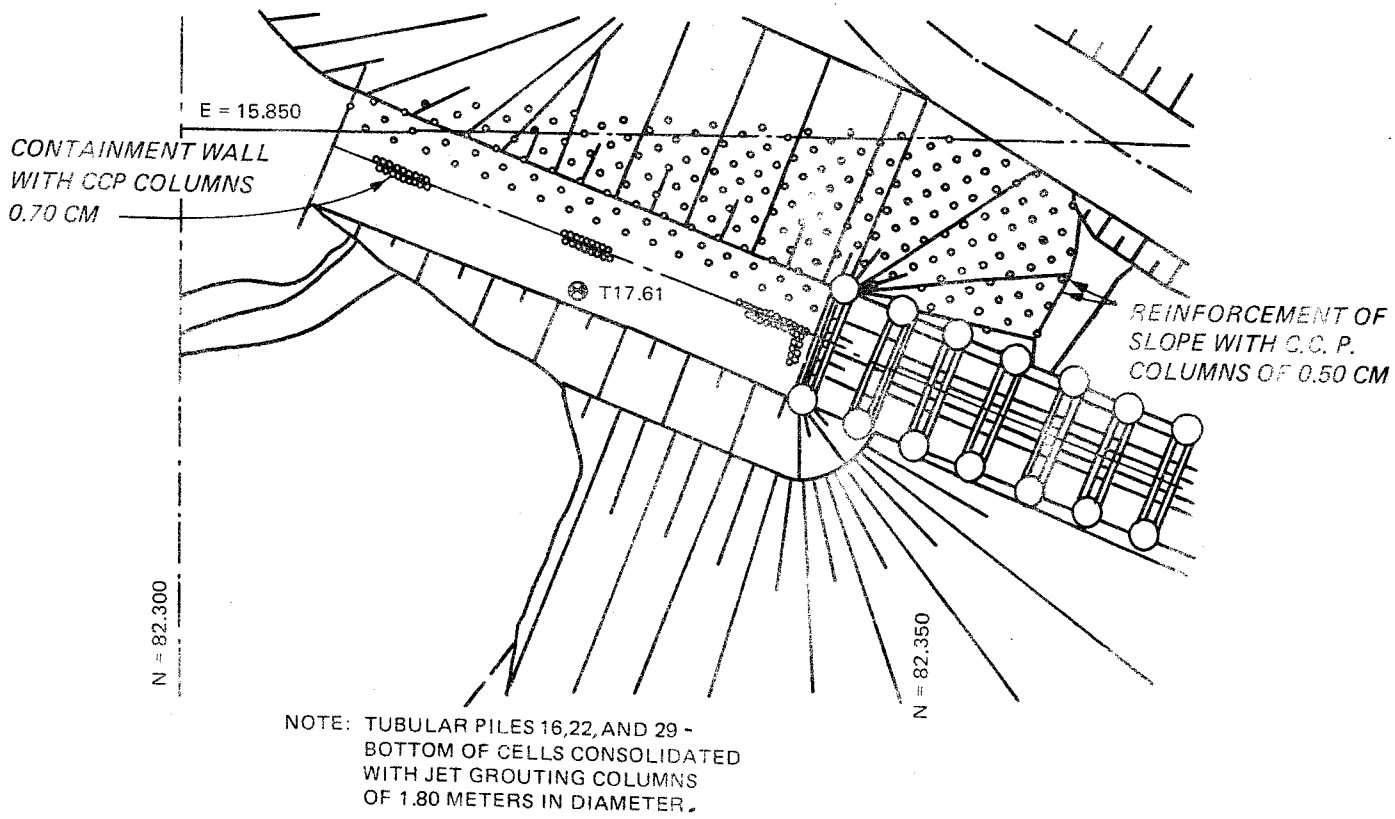


Figure 13. Cutoff wall for the Edgard de Souza Dam across the Tiete River, Sao Paulo, Brazil

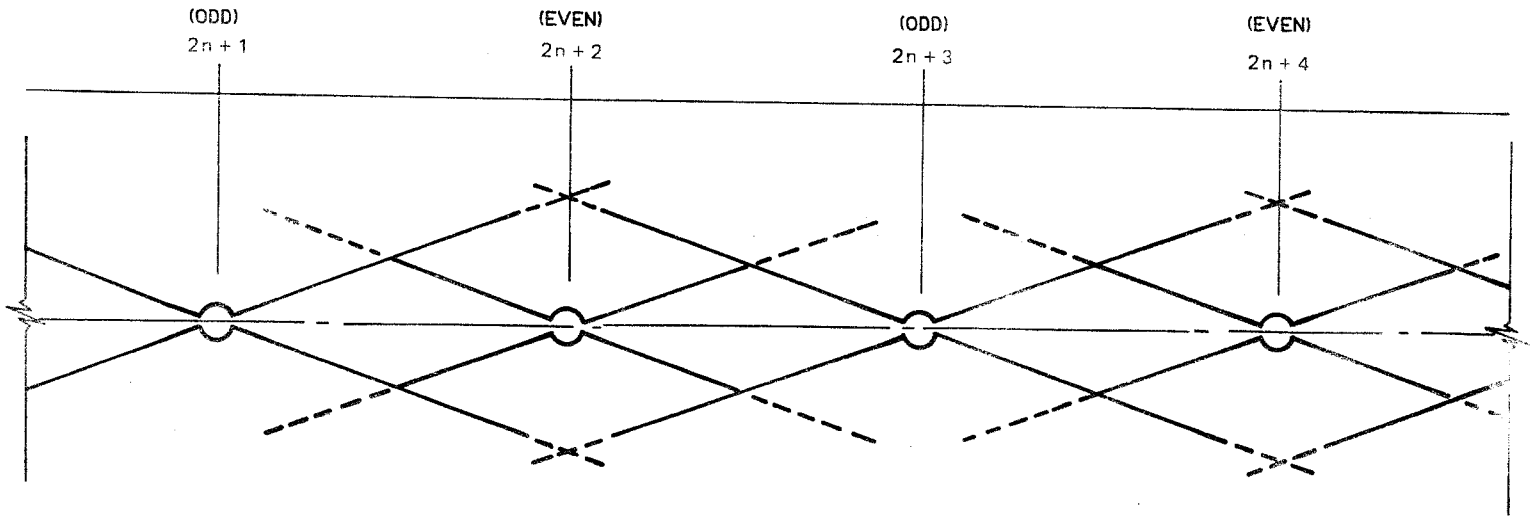


Figure 14. Typical theoretical location of adjacent panels without deviation

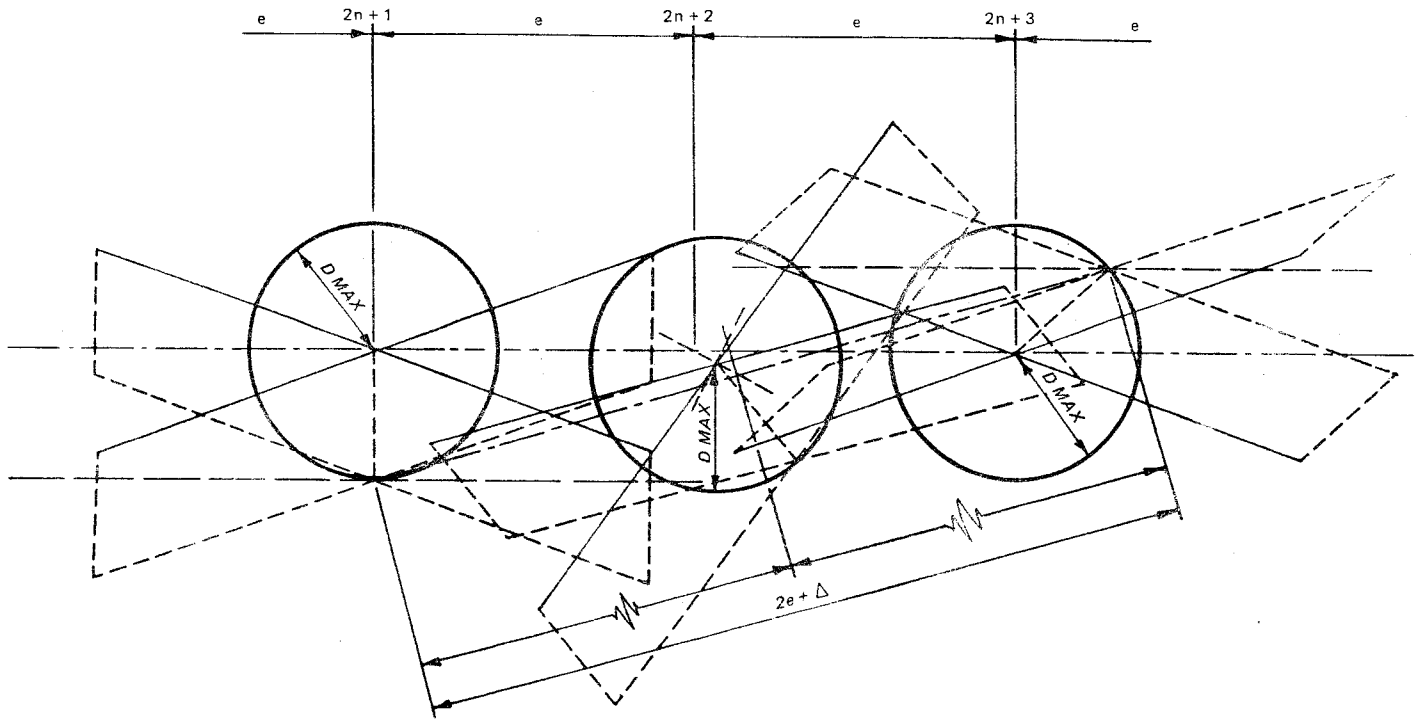


Figure 15. Sample of location of even bodies to compensate deviation of odd bodies

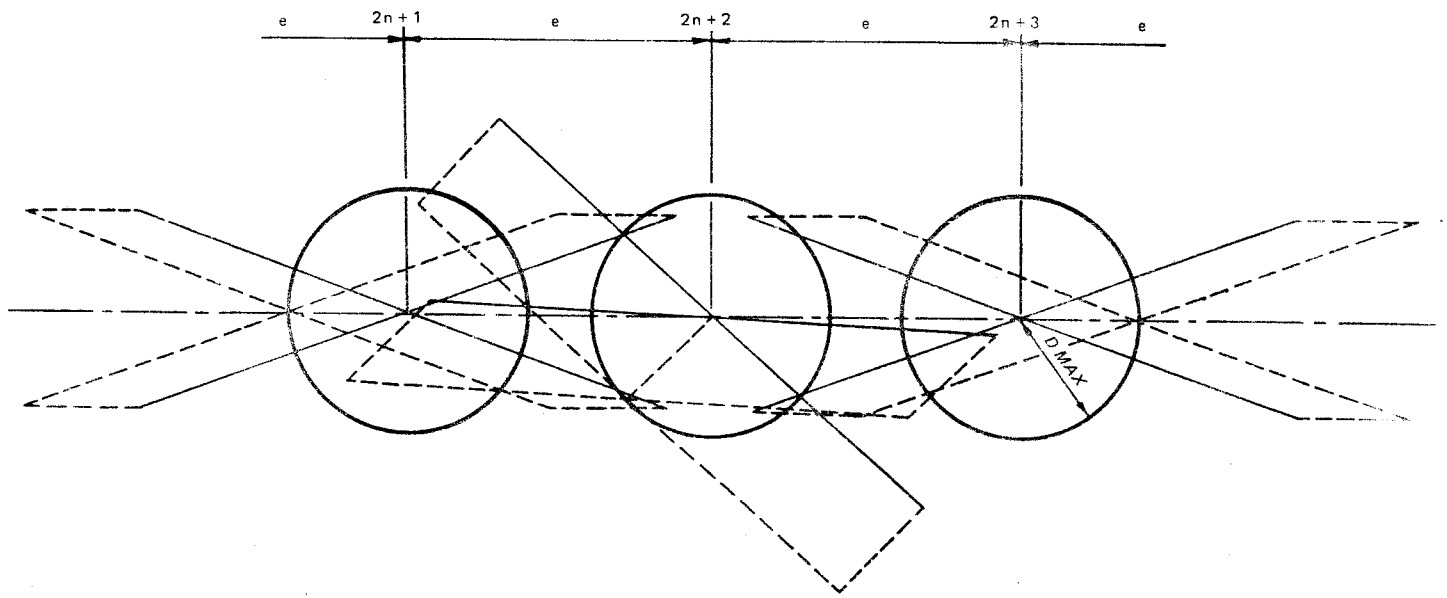


Figure 16. Sample of jets location of even bodies that also had a maximum deviation to compensate maximum deviations of odd bodies

# REINFORCED DOWNSTREAM BERMS

by James M. Duncan
Virginia Polytechnic Institute

## Introduction

1. This paper was prepared for the "Workshop on New Remedial Seepage Control Methods for Embankment-Dams and Soil Foundations" held at the US Army Engineer Waterways Experiment Station on October 21st and 22nd, 1986. The subject and title of this paper, "Reinforced Downstream Berms," was selected by the organizers of the workshop.

2. The paper is divided into two major sections. The first deals with factors that govern the performance of seepage berms. It borrows heavily from recent theoretical work on the subject by Barron (1984). The second section deals with the characteristics of four different proprietary systems for reinforced walls and slopes, including their components and behavior, their design, construction, and cost.

## Downstream Berms for Seepage Control

3. Excessive seepage from the foundation at the downstream side of an embankment dam can lead to unsafe conditions with respect to erosion and piping. One means of controlling such seepage and improving the safety of the structure is to construct a seepage berm on the downstream side of the dam. Seepage berms restrain the foundation soils from being eroded by the seepage emerging from the foundation.

### Design of seepage berms

4. Seepage berms are most effective if they are more permeable than the underlying foundation soils, or if they are constructed on a drainage blanket. A completely permeable berm has no effect on the seepage conditions and does not change the heads in the foundation. Such berms allow the water to flow freely from the foundation, while the underlying soils are restrained. To prevent foundation soils from being washed into the voids in the berm material

by upward seepage from the foundation, the lower portion of the berm must satisfy filter criteria with respect to the foundation.

5. Seepage berms can be constructed using soils that are less permeable than the foundation, but wider and thicker berms are required to achieve the same degree of improvement. When soil with lower permeability is placed on the foundation downstream from a dam, emergence of seepage from the foundation is restricted. The heads in the foundation therefore increase, and a thicker berm is required to counteract the increased uplift pressures. The berm must be wider also, because the heads decrease more gradually with distance downstream.

6. Barron (1984) made theoretical studies of the widths and thicknesses of seepage berms constructed of permeable and not-so-permeable materials. He derived equations that can be used to determine required berm widths and thicknesses for a wide range of geometry and permeability conditions.

7. An example from Barron (1984) is shown in Figure 1. It pertains to a levee 30 ft high, with a 5-ft-thick blanket capping the permeable foundation soils. It can be seen that the required berm width is about 300 ft if the permeability of the berm material is not less than that of the underlying blanket material. When the permeability of the berm is less than that of the blanket, however, the berm must be considerably wider to achieve the same degree of safety. For a berm one-tenth as permeable as the blanket, the required berm width would be about 1,000 ft. For a completely impermeable berm, the required width would be nearly 1,400 ft.

8. Barron (1984) used mathematical analysis to derive formulas for computing the required widths and thicknesses of seepage berms. Barron's analysis considered a number of cases that are of considerable interest and which involve considerable mathematical complexity. Some of the formulas he derived are long and not easy to use. A number of the results derived by Barron are summarized in the following paragraphs, in simplified form. The simplified approach discussed in this paper is intended to make easier applications of Barron's results to practical cases. The simplified approach does not include all the cases considered by Barron, and it involves some approximations not made in Barron's more rigorous analysis.

Determining required widths of seepage berms

9. The formulas Barron derived for infinitely permeable and for completely impermeable berms are given in Figure 2. The terms used in these

formulas are defined at the bottom of Figure 2 and in the sketch at the top of Figure 1.

10. The formulas given in section (1) of Figure 2 can be used to calculate berm widths for cases where the permeability of the berm material exceeds that of the underlying natural blanket, or where a permeable blanket drain underlies the berm. In this case, the distribution of heads in the foundation is not affected by the berm. The head at the toe of the embankment ($h_t$), which is the same after the berm is placed as it was before, can be calculated using the formula given in the figure. When $h_t$ has been determined, the required berm width can then be calculated.

11. Although the formulas at the top of Figure 2 were derived assuming the berm permeability is infinite, they can be used to estimate $h_t$ and B for cases where the berm permeability exceeds that of the foundation but is not infinite. As can be seen in Figure 1, the required berm width increases as the berm permeability decreases. For the case where the berm permeability is equal to that of the underlying natural blanket, the required berm width is about 40 percent wider than for an infinitely permeable berm. It seems reasonable to use the formulas in Figure 2 to determine the berm width for infinite permeability, and then to increase the width to account for a finite value of permeability using Figure 1 as a guide. Also $h_t$ should be increased by the same factor as applied to the width.

12. The formulas given in section (2) of Figure 2 apply to the case where the berm is completely impermeable. In this case, the berm completely seals off seepage from the foundation, and this results in higher heads within the foundation. With no upward seepage through the berm, the variation of head with distance from the embankment toe is linear, and the value of $h_t$ can be calculated once the berm width is known.

13. While the formulas given in section (2) of Figure 2 only apply to completely impermeable berms, the values can be adjusted for cases where the berm permeability is smaller than that of the underlying blanket but is not zero. This adjustment can be made using the factors shown in Table 1, which were derived from the example shown in Figure 1. For a completely impermeable berm, the formula in Figure 2 gives a required berm width of 1,370 ft to achieve a factor of safety against uplift equal to 1.50. For $k_t = k_b$ (berm permeability equal to blanket permeability), the required berm width is 370 ft for $F = 1.50$, or 27 percent of the required width for zero permeability.

14. Values of $h_t$ calculated using the formulas in Figure 2 can also be adjusted for other values of berm permeability. The adjustment factors, which were derived from calculations given by Barron (1984) for the example in Figure 1, are listed in the right-hand column in Table 1. For a completely impermeable berm and F = 1.20, the formula in Figure 2 gives a value of $h_t$ = 22.2 ft. For $k_t = k_b$ (berm permeability equal to blanket permeability) and F = 1.20, the value of $h_t$ given by Barron (1984) is 12.5 ft, or 56 percent of the value corresponding to zero permeability.

Determining required thicknesses of seepage berms

15. The required thickness of a seepage berm is governed by the head beneath it and the desired factor of safety against uplift. The factor of safety against uplift, defined as the ratio of upward seepage force to buoyant unit weight, can be calculated using the formulas given in Figure 3.

16. Two expressions for factor of safety are given in Figure 3, one for the factor of safety against uplift of both the natural blanket and the berm beneath it, and a second for uplift of only the seepage berm. Either of these may be more critical, depending on the relative values of permeability of the berm and the blanket. When the blanket is less permeable than the berm, the factor of safety against uplift of both the blanket and the berm (given by the first expression in Figure 3) is usually smaller than the factor of safety for the berm alone (given by the second expression).

17. The expressions given in Figure 3 can be solved for the value of berm thickness required to give the desired factor of safety. Using these expressions with $h = h_t$ gives the required berm thickness at the embankment toe.

18. The required berm thickness at the downstream end of the berm is zero for cases where the berm is more permeable than the underlying natural blanket. For cases where the berm is less permeable than the blanket, some thickness is required at the toe. The thickness required can be calculated using the formula given in Figure 4. This expression gives the thickness required to achieve the same factor of safety against uplift at the downstream toe of the berm as for the area just beyond the berm toe. It was derived by using the first formula in Figure 3 to develop an expression for the factor of safety of the blanket alone, by setting the berm thickness equal to zero. This expression then gives the factor of safety just beyond the berm toe.

This expression was then equated to the second formula in Figure 3, and the resulting equation was solved for the value of t. This value of t thus corresponds to equal factors of safety at the berm toe and just beyond the berm toe. This value of factor of safety is the one used in calculating the width of the berm, by means of the formulas given in Figure 2.

19. If the berm was completely impermeable, the head at the base of the natural blanket would vary linearly with distance downstream from the embankment. A berm with uniformly varying thickness would have the same factor of safety at all locations from the embankment toe to the berm toe.

20. If the berm has a finite permeability, or even if it is infinitely permeable, the head does not vary linearly with distance downstream from the embankment. Near the embankment toe the variation of head with distance is more rapid than it is further downstream. In this case, a berm with uniformly varying thickness has a higher factor of safety in the area between the embankment toe and the berm toe than it does at those locations. The thickness of the berm would have to vary in a nonlinear manner with distance from the embankment toe in order to achieve exactly the same factor of safety at all locations. Barron (1984) extended his theoretical studies to include consideration of how the berm thickness should vary to achieve an exactly uniform factor of safety.

21. Because of the way the head varies with distance downstream from the embankment toe, if the slope of the berm surface is constant, the minimum factors of safety occur at the embankment toe and the berm toe. All of the area in between has a slightly higher factor of safety. The extreme magnitude of this effect occurs when the berm is infinitely permeable. In this case, a savings in volume of about 30 percent would be possible if the berm surface was graded in a curve calculated to achieve exactly the same factor of safety at all locations. The details indicating the required shape are given by Barron (1984).

## Reinforcement of Berms

22. As can be seen from the discussion in the previous section, seepage berms usually have mild surface slopes and small thickness at the downstream end. Thus, in most cases, there would appear to be little need for reinforcement of seepage berms. In some situations, however, a seepage berm may have a

steep slope that would need to be supported or reinforced for stability. This might occur, for example, at the edge of an outlet channel below a dam. The following sections consider the possible use of various types of reinforcement for such slopes.

23. Slope reinforcement systems of the kinds discussed in this paper are proprietary. The companies that market these systems employ engineering staffs and are able to provide engineering assistance to design engineers who wish to use their products, as well as technical information regarding their products and their design methods. Through this mechanism a considerable body of extremely valuable design and construction experience is available to engineers who may be unfamiliar with the details of the various slope reinforcement systems, but who would like to explore their potential value for use on a particular project.

Reinforced Earth

24. Reinforced Earth, a product of the Reinforced Earth Company (headquarters in Arlington, Virginia), was originated by French engineer Henri Vidal about 20 years ago. It has since been extensively used in Europe and the United States. Many of the applications have been for highway bridge abutments, but a wide variety of other applications have also been made, notably including marine structures.

25. Reinforced Earth walls, shown in Figure 5, employ galvanized or aluminum ribbed strips as the reinforcing elements, and precast concrete or steel panels as the wall facing. The facing panels overlap to prevent raveling of the backfill, and cork is used in the joints between panels to accommodate differential settlements. The backfill for Reinforced Earth must be a fairly clean sand or gravel, with less than 15 percent finer than the # 200 sieve, and a PI less than 6.

26. The company provides a full range of engineering services, including preliminary design and cost estimates, final design, assistance at prebid and preconstruction conferences, and assistance to the contractor during construction.

Hilfiker Welded Wire Walls
and Reinforced Soil Embankments

27. The Hilfiker Company, located in Eureka, California, was awarded its first patent for a reinforced retaining wall system in 1970, and now holds several. Hilfiker walls have been used for a wide variety of applications,

including bridge abutments, landslide repairs, embankment stabilization, erosion control, and others.

28. Two different systems are marketed by Hilfiker. Their Welded Wire Wall, the less costly of the two, uses wire mesh and wire screen as wall facing (Figure 6). The second system, Reinforced Soil Embankment, which is shown in Figure 7, uses precast concrete facing elements. Both types use galvanized wire mesh as the reinforcing element, and both interlock for assembly, so no bolts or other fasteners are required. Backfill materials range from GW to SC by the Unified Classification System, and required compaction is 90 percent of Standard Proctor.

29. Hilfiker provides a full range of engineering services, in addition to manufacturing the wall components. Many designs are standardized, and designs for unique conditions are prepared on request.

VSL Retained Earth walls

30. The VSL Corporation has its headquarters in Los Gatos, California. In business since the 1960's, VSL was originally a contracting company specializing in post-tensioning. Unlike the manufacturers of the other wall systems included in this paper, VSL offers construction services and will build complete wall systems, including erection and backfilling as well as manufacturing the components. VSL will also work with other erection and backfilling contractors if desired.

31. Retained Earth walls, shown in Figure 8, use galvanized wire mesh reinforcing elements and precast concrete wall panels. The company does not set general specifications for acceptable backfill systems, but candidate backfills must be approved by VSL engineers. Retained Earth walls have been used for a wide range of applications, including bridge abutments, retaining walls, stream protection, and others.

32. VSL employs structural and geotechnical engineers and offers a wide range of services, including consultation, feasibility studies, design, and construction.

Tensar Geogrid-reinforced walls and slopes

33. The Tensar Corporation has its headquarters in Atlanta, Georgia. Tensar has recently reached a marketing agreement with Armco, and information on Tensar products is available from all Armco offices. Tensar Geogrids were manufactured first in England by a company called Netlon, Ltd. The geogrid manufacturing process involves punching holes in sheets of polymer and

stretching them at elevated temperatures. As the polymer sheets are stretched, the molecules become oriented in the direction of stretch, and their strength is increased. The oriented polymers actually have tensile strengths exceeding that of some steel. The polymer grids are chemically inert under most circumstances encountered in burial, and the grids are thus not subject to deterioration by chemical action. Carbon black is added to the polymer mix to make the geogrids resistant to damage from ultraviolet radiation.

34. Geogrid-reinforced walls use the polymer grids for reinforcing and, in some applications, for facing also, as shown in Figure 9. The exposed grid facing system is called the "wraparound" design. With the grids exposed, the face of the wall can be seeded to develop a turf covering. Other types of facing have also been used. These include brick, wood, concrete, and other materials. The facings can be attached to the reinforcing, or with the wraparound design, the facing can stand in front of the wall face, serving as a decorative and protective element in front of the geogrid facing. Applications include retaining walls, reinforced slopes, landslide repairs, gabions, coastal structures, and others.

35. Besides manufacturing the geogrids, Tensar employs geotechnical engineers in a number of offices around the United States and provides a wide variety of engineering services. These include feasibility studies, design studies, technical assistance regarding geogrid properties, and construction advice.

36. Table 2 contains a summary of the characteristics of these reinforcement systems. It can be seen that Reinforced Earth, Reinforced Soil Embankments, and Retained Earth have a great deal in common. All use galvanized steel reinforcement, all use precast concrete facing panels, and all use similar types of backfill soils. They differ in that the Hilfiker and VSL products use welded wire mesh for reinforcing rather than the separate flat ribbed reinforcing strips used in Reinforced Earth, and the Hilfiker walls lock together without bolts or other connectors. Reinforced Earth has been constructed using aluminum reinforcing strips in at least one application, and using steel wall panels in another.

37. The Welded Wire Wall produced by Hilfiker uses no concrete facing. The backfill is retained by wire facing elements called "backing mats," with finer screen behind to retain the finer soil particles. Elimination of the

concrete facing reduces the cost of Welded Wire Wall as compared to the Reinforced Soil Embankments, which are also produced by Hilfiker and which are the same in most other respects.

38. The Tensar Geogrid-reinforced walls and slopes differ from the other systems mainly in the reinforcement, which is high-strength oriented polymer rather than metal. Tensar walls are sometimes faced with the geogrid material, and sometimes with other materials. The geogrids can be cast into the facing if desired. When the grid itself is used as the facing material, the grid is wrapped back around the soil at the face to encapsulate and retain the backfill. Most types of onsite soils can be used as backfill for Geogrid-reinforced walls and slopes. The amount of reinforcement needed in a given application is determined by the wall height, the external loads, and the type of backfill.

Durability

39. Longevity is an extremely important consideration for all of these systems, because they use reinforcement embedded in the backfill, inaccessible for repair or maintenance. Tests to measure rates of corrosion of buried metal conducted by the National Bureau of Standards from 1910 to 1955 (Romanoff 1957) provide data for estimating corrosion rates for galvanized and plain steel, in a range of pH environments. Rates of corrosion are used in estimating the metal thickness that may be lost over the design life of the structure. Metal thicknesses are used that will provide sufficient reinforcing capacity at the end of the design life, after reduction of thickness by corrosion.

40. The polymer materials used in Tensar Geogrids are chemically inert in most environments, an advantage for longevity. No reduction in area or strength due to corrosion or other chemical action is made in selecting design loads for the polymer geogrids. The material does creep appreciably under load, and the reinforcement loads used in design are selected considering the creep strains expected over a design life of 120 years or more.

Design procedures

41. Design of reinforced walls involves two types of considerations:

a. External stability.

b. Reinforcement capacity.

The procedures used to ensure external stability are essentially the same as those used to evaluate stability of conventional gravity and cantilever walls.

The reinforced zone is considered as a block, and its safety with respect to sliding, overturning, and bearing capacity is evaluated using equations of static equilibrium.

42. Design for reinforcement capacity considers the stress in the reinforcing elements and the possibility of pullout failure. Field measurements have shown that the peak stress in the reinforcing occurs at a distance behind the facing equal to about three tenths of the wall height. The length of reinforcing behind the plane of peak stress is the grip length, where resistance to pullout is developed.

43. The design procedures used by the Reinforced Earth Company, Hilfiker, and VSL are very similar. These are shown in Figure 10. The width of the reinforced zone (B), equal to the length of the reinforcing elements, is standardized. The minimum width used is 0.7H or 0.8H. Larger values of B, up to 1.3H, are used for low walls and severe loadings conditions. Surcharge loadings on the backfill are considered in analyzing both external stability and internal stability.

44. The procedures used for design of Tensar Geogrid walls, while the same in principle as those shown in Figure 10, differ in some respects. The reinforcing extends a constant distance behind a plane inclined at $45° + \phi/2$ from the horizontal and is thus longer near the top of the wall than at the bottom. The procedures used to evaluate safety against overload of the reinforcement and pullout are similar to those shown in Figure 10.

45. The design procedures used by all of the distributors discussed are founded on solid principles of soil mechanics, properly tempered with laboratory test results and field experience. As noted previously, all of the companies have engineering staffs who can provide assistance with design when required. It is thus not necessary for an engineer wishing to use one of these systems, or to explore its usefulness for a particular project, to be fully versed in all of the detailed aspects of its design.

Performance

46. One advantage of reinforced walls as compared to conventional concrete walls is that they are more flexible and thus better able to withstand differential settlements without distress. The reinforcing elements can undergo considerable distortion without ill effects, and the articulated facing panels can accommodate some differential settlements without damage. The flexible facings used on the Hilfiker Welded Wire Walls and the Tensar

wraparound Geogrid-reinforced walls are even better able to tolerate differential foundation movements, being even more flexible than the other types of facing.

Construction and cost

47. One of the principal advantages of all of these reinforced wall systems is that they can be constructed using relatively small equipment. Crews of four or five workers are common. Depending on the height of the wall, construction rates from about 700 sq ft per shift to 2,000 sq ft per shift have been achieved. The rate of production increases as the height of wall decreases.

48. According to the manufacturers of these systems, costs per square foot of wall are about one half of the cost of conventional concrete gravity or cantilever walls. Cost figures developed by the Federal Highway Administration in 1971 indicated costs per square foot for Reinforced Earth walls were less for low walls than for high walls, the per square foot cost for 10-ft-high walls being only about 40 percent as great as for 50 ft-high walls. This strong influence of wall height on the cost per square foot is interesting and worth noting. Costs also depend on job location and the accessibility of the site, as well as on the cost of suitable backfill material. Costs per square foot in 1986 probably average somewhere around $25 to $30 per square foot. The manufacturers of these systems are able and willing to assist with cost estimates on particular projects if desired.

## Summary and Conclusion

49. Seepage berms provide an effective and reliable means for controlling excessive seepage from the foundation at the downstream side of dams on soil foundations. Seepage berms restrain the foundation soils, increasing safety with respect to erosion and piping in periods of high water. Berms constructed of permeable material are more effective than those constructed of impermeable or semipermeable materials, in that the same degree of safety can be achieved with much less material. As shown in the first section of this paper, berms constructed of material having permeabilities as high or higher than the foundation soil need be only about one fourth as wide and half as thick as berms of less permeable soils and would thus have only about

one eighth as much volume. There is thus a clear advantage to constructing berms of permeable materials whenever possible.

50. The extensive mathematical studies made by Barron (1984) provide a valuable basis for estimating the widths and thicknesses of berms required to achieve a given factor of safety against uplift. The first section of this paper presents a simplified approach for estimating the width and thickness of berms, based on Barron's mathematical studies.

51. The second section of this paper discusses the use of reinforced walls and slopes for seepage berms, in cases where that may be desirable. The characteristics of four different proprietary systems for constructing reinforced walls are discussed: Reinforced Earth, Hilfiker Welded Wire Walls and Reinforced Soil Embankments, VSL Retained Earth walls, and Tensar Geogrid-reinforced walls and slopes. These systems have been used previously for applications such as marine structures, erosion control, stream protection, and coastal structures, and all appear to have potential for use in reinforcing seepage berms, as well as for a variety of other applications.

52. The characteristics of the four reinforcing systems, and the methods used for their design have been discussed in detail and summarized in Table 2 and Figure 10. Their advantages as compared to conventional concrete walls include lower cost, rapid construction, and greater ability to accommodate differential foundation movements without distress. All of the distributors of these systems employ engineering staffs, and detailed information and design assistance are available to engineers who want to determine the cost and the technical potential of these systems for use on a particular project.

## Acknowledgment

The writer wishes to express his appreciation to Ms. Suzanne Blackburn of the Hilfiker Company, Mr. Oliver MacIntosh and Mr. Robert Gladstone of the Reinforced Earth Company, Mr. Roger Bloomfield of the VSL Corporation, and Dr. Rudy Bonaparte of The Tensar Corporation for their very generous assistance in providing information for use in this paper.

## References

Barron, R. A. 1984. "Mathematical Analysis of Landside Seepage Berms," Technical Report REMR-GT-1, prepared for US Army Corps of Engineers, Washington, DC.

Romanoff, M. 1957. "Underground Corrosion," National Bureau of Standards Circular 579.

In addition to these published references, considerable information on the reinforced wall systems discussed in this paper was obtained from the informative product literature provided to the writer by the various manufacturers. Their telephone numbers are listed below so that interested readers can obtain copies of the latest available product literature directly from the manufacturers.

Reinforced Earth Company, Arlington, Virginia.
Telephone No. (703) 527-3434.

The Hilfiker Company, Eureka, California.
Telephone No. (707) 443-5091.

The VSL Corporation, Los Gatos, California.
Telephone No. (408) 866-5000.

The Tensar Corporation, Atlanta, Georgia.
Telephone No. (404) 968-3255.

Table 1

Required Berm Lengths and Heads at the Embankment Toe for Berms That Are Less Permeable Than the Foundation Blanket

| Ratio of Berm Permeability to Blanket Permeability $k_t/k_b$ | Ratio of Required Berm Length to Length Required for $k_t = 0$ for F = 1.0 | for F = 1.5 | Ratio of Head at Toe to Head for $k_t = 0$ $h_t / h_t^t$ |
|---|---|---|---|
| 1.0 | 0.30 | 0.27 | 0.56 |
| 0.1 | 0.64 | 0.71 | 0.89 |
| 0.01 | 0.76 | 0.95 | 0.99 |
| 0.001 | 0.97 | 1.00 | 1.00 |
| 0.0001 | 1.00 | 1.00 | 1.00 |

Table 2

Characteristics of Proprietary Systems for Soil Reinforcement

| Product Name | Company Name | Reinforcement Materials | Facing Materials | Design and Engineering | Applications | Acceptable Backfill Materials | Design Life |
|---|---|---|---|---|---|---|---|
| Reinforced Earth | Reinforced Earth Company | Galvanized steel or aluminum ribbed strips | Precast concrete or steel panels | Company provides complete service | Walls, marine structures, other | Less than 15% passing #200, PI < 6 | Based on extra thickness, can be more than 100 years |
| Welded Wire Wall | The Hilfiker Company | Galvanized wire mesh | Wire mesh and screen | Company's consultant or other | Embankment reinforcement, erosion control, other | GW to Sc 90% Std. Proctor | 50 years standard, can be more than 100 years |
| Reinforced Soil Embankment | The Hilfiker Company | Galvanized wire mesh | Precast concrete | Company's consultant or other | Embankment reinforcement, erosion control, other | GW to SC 90% Std. Proctor | 50 years standard, can be more than 100 years |
| Retained Earth | VSL Corporation | Galvanized wire mesh | Precast concrete | Company provides complete service, also construction | Retaining walls, stream protection, other | VSL approved, 95% Std. Proctor | Based on extra thickness, can be more than 100 years |
| Tensar Geogrid Walls | The Tensar Corporation | Polymer geogrids | Geogrids, concrete, wood, brick, other | Owner's engineer, with Tensar engineering staff | Retaining walls, coastal structures, other | On-site material | Based on chemical stability, creep, can be more than 100 years |

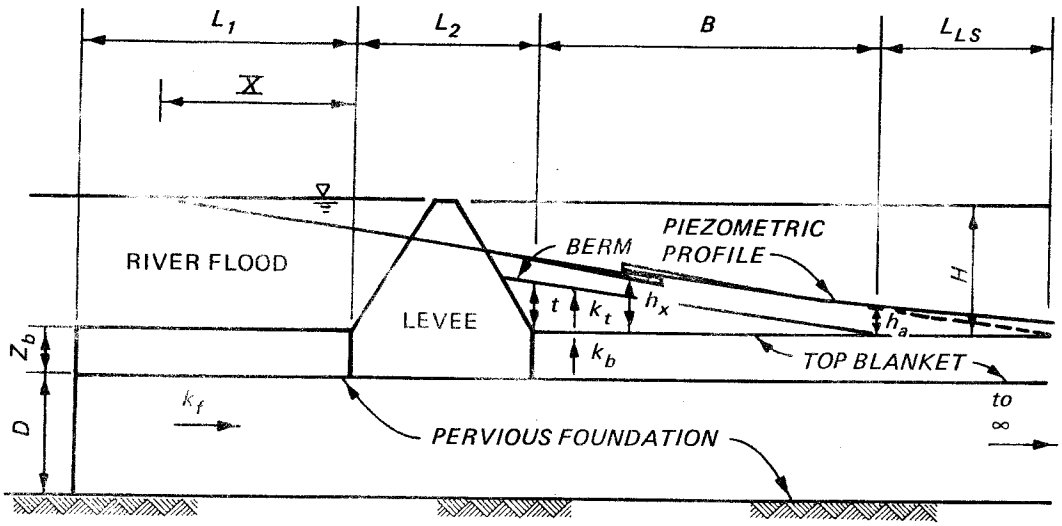


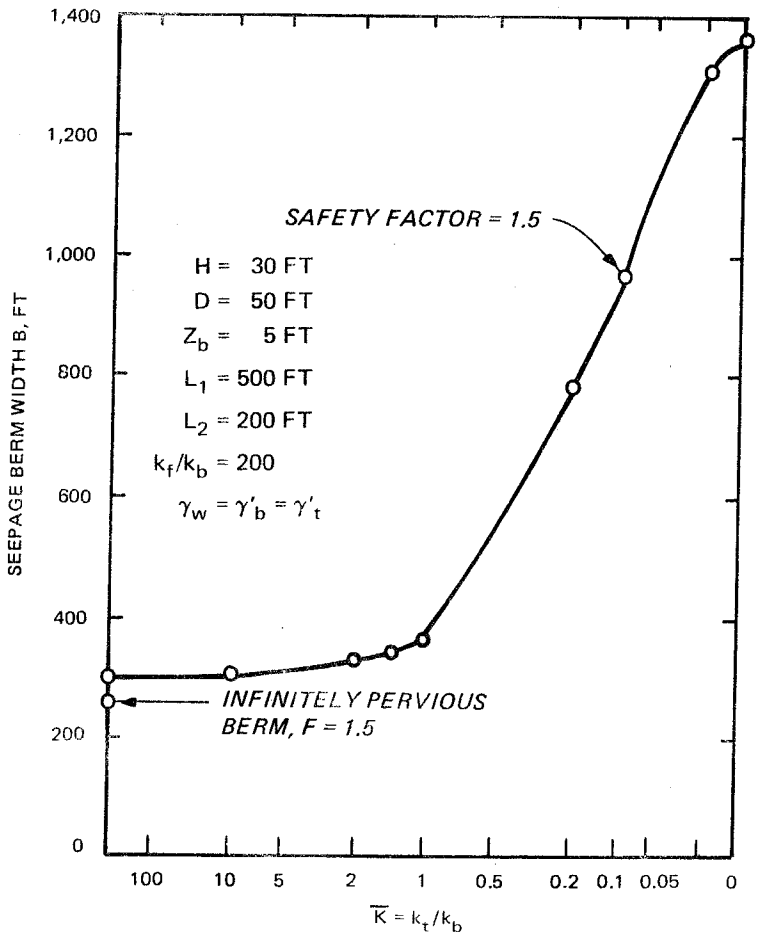


Figure 1. Variation of required width of seepage berm with ratio of berm permeability to blanket permeability (Barron 1984)

(1) Infinitely Permeable Berm

$$B = L_{LS} \cdot \ln\left(\frac{F \gamma_w h_t}{Z_b \ \gamma_b'}\right)$$

$$h_t = \frac{H \cdot L_{LS}}{X + L_2 + L_{LS}} \text{ (calculate } h_t \text{ before B)}$$

(2) Completely Impermeable Berm

$$B = \frac{F \ \gamma_w \ H \ L_{LS}}{Z_b \ \gamma_b'} - (X + L_2 - L_{LS})$$

$$h_t = \frac{H(B + L_{LS})}{X + L_2 + B + L_{LS}} \text{ (calculate B before } h_t\text{)}$$

where $L_{LS} = \sqrt{\frac{k_f}{k_b} \cdot D \cdot Z_b}$

$$X = L_{LS} \cdot \tan h\left(\frac{L_1}{L_{LS}}\right)$$

F = factor of safety against uplift

$\gamma_b'$ = buoyant unit weight of blanket

$\gamma_w$ = unit weight of water

Definitions of other terms shown in Figure 1

Figure 2. Formulas for calculating required berm lengths for infinitely permeable and impermeable berms

(1) Factor of Safety Against Uplift of Both Blanket and Berm

$$F = \frac{Z_b \gamma_b' + t \gamma_t'}{(h - t) \gamma_w}$$

(2) Factor of Safety Against Uplift in the Seepage Berm

$$F = \frac{\gamma_t' \left(t + Z_b \frac{k_t}{k_b}\right)}{(h - t) \gamma_w}$$

where $F$ = factor of safety against uplift

$\gamma_b'$ = buoyant unit weight of blanket

$\gamma_t'$ = buoyant unit weight of berm

$Z_b$ = blanket thickness

$t$ = berm thickness

$k_b$ = blanket permeability

$k_t$ = berm permeability

$h$ = head at bottom of blanket, measured from ground surface as datum

Figure 3. Formulas for calculating factors of safety against uplift in the natural blanket and the seepage berm

$$t = \frac{h - \dfrac{Z_b \, \gamma_b \, \dfrac{k_t}{k_b}}{F\gamma_w}}{1 + \dfrac{\gamma_t}{F\gamma_w}} \quad \text{for } \frac{k_t}{k_b} < 1$$

$$t = 0 \text{ for } \frac{k_t}{k_b} \geqq 1$$

where $t$ = berm thickness required at downstream end of berm

$Z_b$ = thickness of natural blanket

$\gamma_t'$ = buoyant unit weight of berm

$\gamma_b'$ = buoyant unit weight of blanket

$k_t$ = berm permeability

$k_b$ = blanket permeability

$h$ = head at downstream end of berm, measured from ground surface as datum

Figure 4. Formula for calculating required berm thickness at the downstream end of the seepage berm

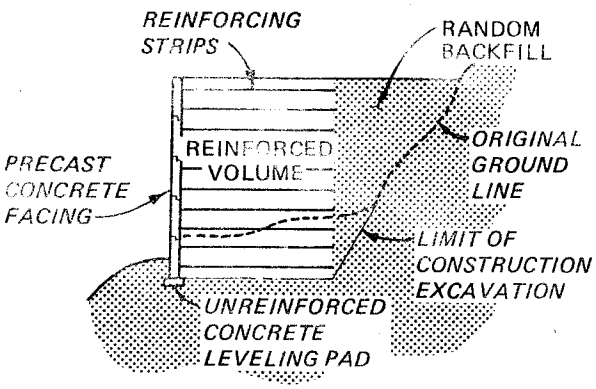


TYPICAL SECTION OF A REINFORCED EARTH RETAINING WALL

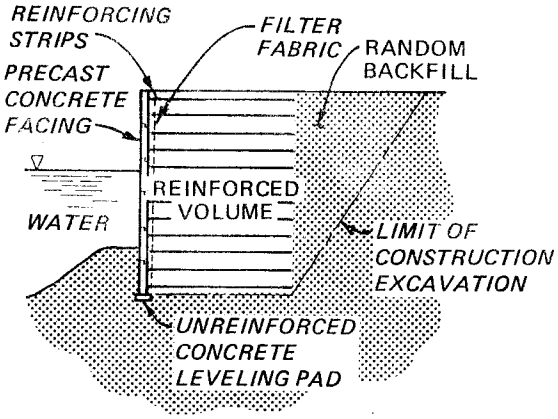


TYPICAL SECTION OF A REINFORCED EARTH MARINE BULKHEAD. FILTER FABRIC IS USED BEHIND ALL PANEL JOINTS TO AVOID WASHOUT OF FINE BACKFILL MATERIAL

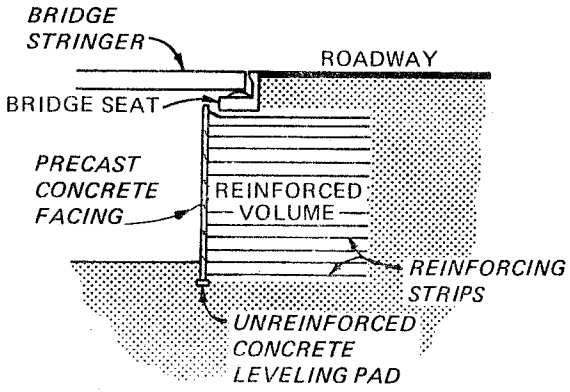


TYPICAL SECTION OF A REINFORCED EARTH ABUTMENT. NOTE THAT THE BRIDGE SEAT RESTS DIRECTLY ON THE REINFORCED VOLUME.

Figure 5. Reinforced Earth walls

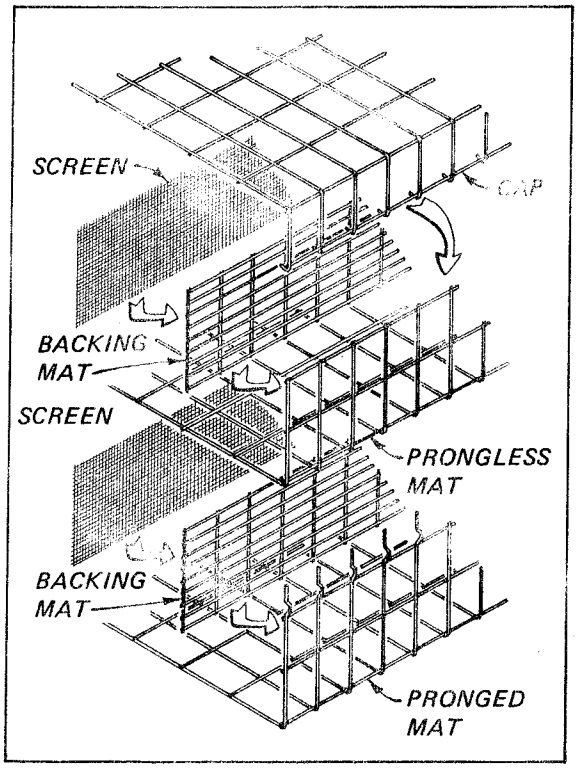


HILFIKER
WELDED WIRE WALL COMPONENTS

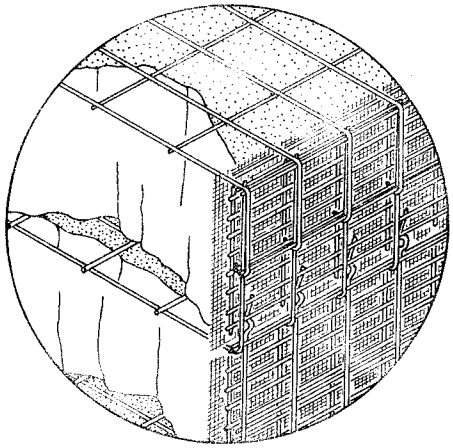

ASSEMBLED
WELDED WIRE WALL COMPONENTS

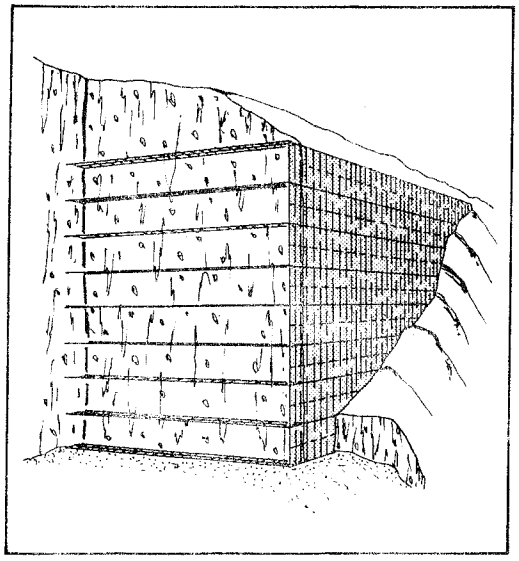

STANDARD WELDED
WIRE WALL

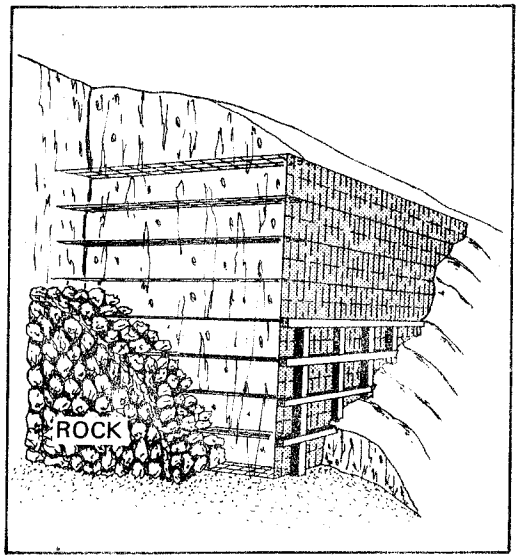


WELDED WIRE WALL
WITH ROCK ANCHORS

Figure 6. Hilfiker Welded Wire Walls

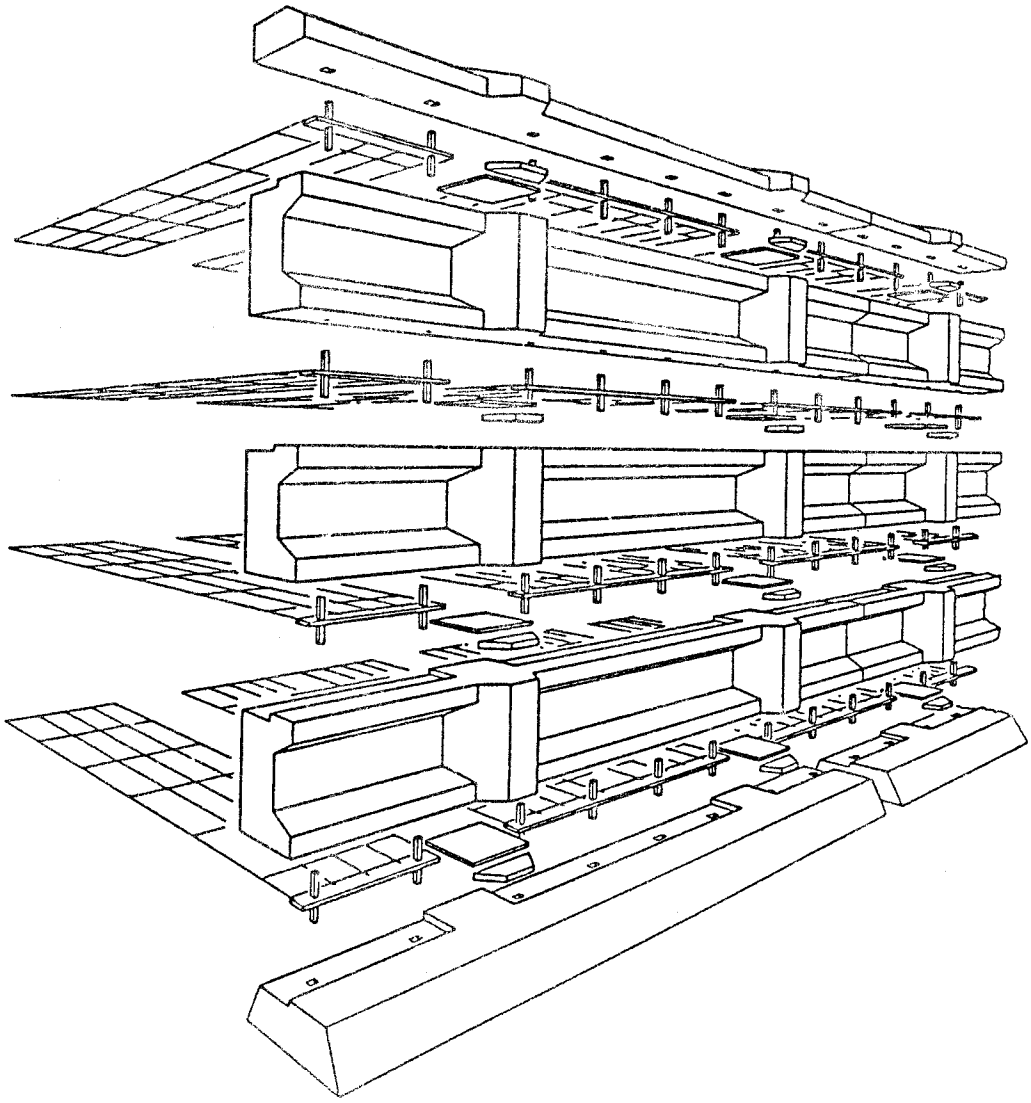

Figure 7. Hilfiker Reinforced Soil Embankments

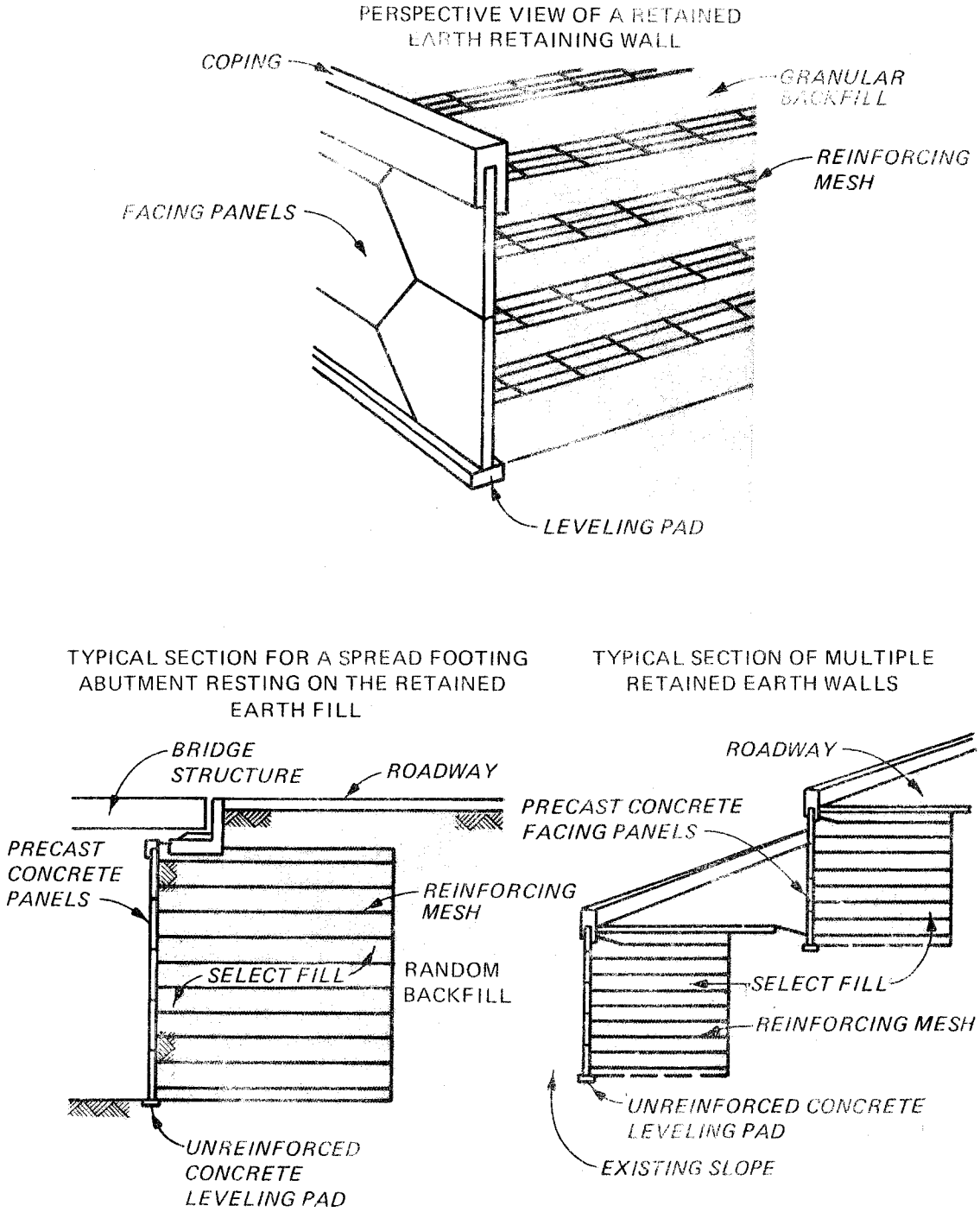


Figure 8. VSL Retained Earth Fill walls

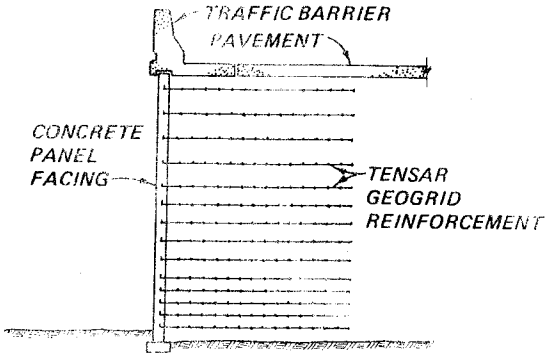


CROSS-SECTIONAL VIEW OF TENSAR GEOGRID REINFORCED SOIL RETAINING WALL WITH CONCRETE PANEL WALL FACING

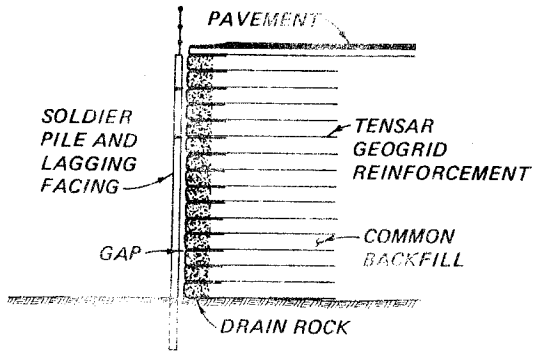


CROSS-SECTIONAL VIEW OF A "WRAPAROUND" RETAINING WALL STRUCTURE WITH A NON-LOAD BEARING FACING. IN THIS APPLICATION, ALL LATERAL EARTH PRESSURES ARE RESISTED BY THE TENSAR GEOGRID REINFORCEMENT, AND ANY CONNECTION BETWEEN FACING AND BACKFILL IS ONLY TO ALIGN AND/OR SUPPORT THE FACING

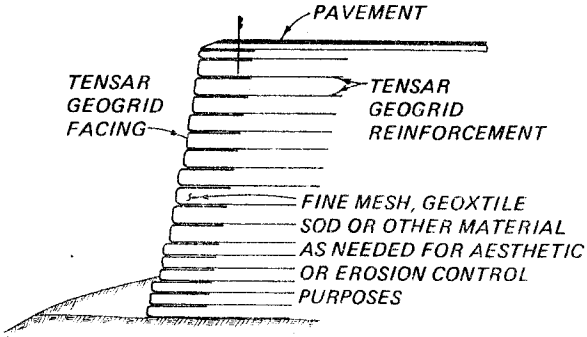


CROSS-SECTIONAL VIEW OF A REINFORCED SOIL RETAINING WALL USING THE "WRAPAROUND" FACING TECHNIQUE WHEREIN THE TENSAR GEOGRID IS USED AS THE FACING ELEMENT.

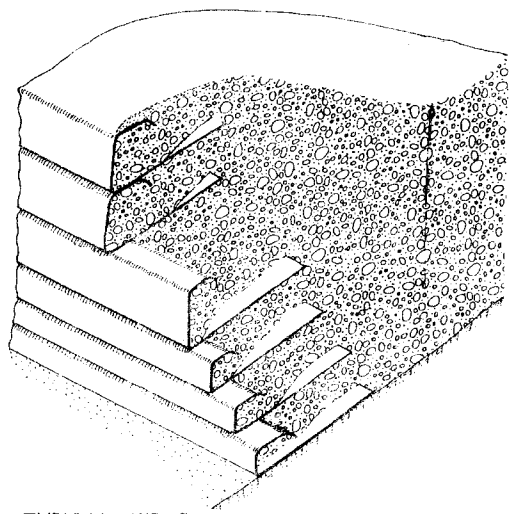

TYPICAL "WRAP-AROUND" APPLICATION

Figure 9. Tensar Geogrid-reinforced walls and slopes

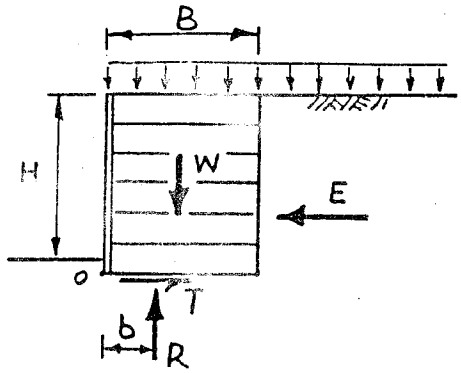


q = surcharge

Earth pressure force, E, includes effect of surcharge. E is determined using earth pressure coefficient, K, from field measurements. $K = K_o$ at surface, decreasing to $K = K_a$ at depth of 20 feet.

Design Criteria

(1) Sliding

$$F = \frac{R \tan \phi}{T} \geq 1.5$$

(2) Overturning

$$F = \frac{M_W}{M_E} \geq 2.0$$

$$b = \frac{M_W - M_E}{W} \geq \frac{B}{3}$$

(3) Bearing Pressure

$$P = \frac{W + q \cdot B}{2b} \leq \text{allowable bearing pressure}$$

$$b = \frac{M_W + M_q - M_E}{W + qB}$$

(4) Reinforcement Stress

$$f_r = \frac{\sigma_h A}{A} \leq \text{allowable stress}$$

(5) Pullout Resistance

$$F = \frac{\text{Pullout Resistance}}{\text{Pullout Load}} \geq 1.5$$

B = width of reinforced zone
= length of reinforcement

H = wall height

E = earth pressure force

W = weight

q = surcharge

R = vertical reaction

T = horizontal reaction

$M_W$ = moment due to W
$M_q$ = moment due to q
$M_E$ = moment due to E
} about toe of wall - point 0

b = offset of R from toe

$\sigma_h$ = horizontal earth pressure at a particular depth

A = area of wall face loading reinforcing element

a = cross-sectional area of reinforcing element

Figure 10. Design procedure for Reinforced Earth, Hilfiker, and VSL Reinforced Walls

# PLASTIC CONCRETE CUTOFF WALLS

George J. Tamaro
Mueser Rutledge Consulting Engineers

## Introduction to Slurry Wall Technology

1. There are basically three methods of achieving an impermeable cutoff wall using slurry wall techniques:

   a. Soil-bentonite backfill slurry trench.

   b. Cement-bentonite backfill slurry trench.

   c. Plastic or rigid concrete backfill slurry trench.

### Soil-bentonite backfill slurry trenches

2. Soil-bentonite (SB) backfill slurry trenches are excavated in a continuous manner to practical depths down to 100 ft. For depths of approximately 50 ft, excavation is performed by hydraulic backhoe or drag line excavators. For depths in excess of 50 ft, a combination of either backhoe or drag line and clamshell operation is necessary to effectively perform the excavation. A chisel is used to excavate hard lenses of soil or rock and, if necessary, to cut a key into rock. The slurry trench excavation is kept open by replacement of excavated soil with a bentonite slurry. Bentonite slurry stabilizes the sidewalls of the excavation until such time as a mixture of soil and bentonite slurry can be replaced in the trench to provide the permanent cutoff (Figure 1). This procedure is most appropriate in shallow trenches (depths down to 50 ft) where the backhoe can effectively dig a continuous trench without the need for clamshell or chisel operation. The thickness of the soil-bentonite backfill is usually related to the hydraulic gradient i (pressure differential in feet of water divided by the wall thickness in feet), which is a measure of the hydraulic head differential across the cutoff wall. Conventional practice suggests that a maximum gradient of 10 (using a factor of safety of 3) be applied to soil-bentonite cutoffs in order to minimize the possibility of either hydraulic fracturing or migration of fines under hydraulic gradient.* These criteria may be excessively

---

* For a more complete discussion of the blowout requirements of soil-bentonite slurry trench cutoffs, see EM 1110-2-1901, pp 9-24 to 9-25.

conservative and are more often than not, not followed. These criteria would require a 5-ft-thick soil-bentonite backfill slurry trench for a cutoff wall extending 50 ft below ground-water levels. Because of the nature of the geology at certain sites, it may not be economical, practical, or even possible to excavate to a full 5-ft width. Laboratory tests on properly designed and blended backfill indicate permeabilities in the range of $1 \times 10^{-6}$ to $1 \times 10^{-7}$ cm/sec.

Cement-bentonite backfill slurry trenches

3. Cement-bentonite (CB) slurry trenches are excavated either as a continuous trench, as described in the foregoing paragraph, or in panels, that is, a segmented wall excavated as shown in Figure 2. The cement-bentonite slurry trench differs from the foregoing technique inasmuch as a mixture of cement and bentonite in slurry form is substituted for the conventional bentonite slurry. The cement-bentonite slurry provides a two-fold function. First, it supports the trench during excavation, and second, it provides the permanent backfill material for the trench as the cement bentonite solidifies in place.

4. Because of variations in the geology at certain sites where the occurrence of various hard and soft materials makes it difficult to predict and estimate accurately the rate of progress of the trench excavations, it is possible that the cement bentonite would harden in the trench at a rate faster than the rate of excavation. As a result, it becomes necessary to reexcavate cement bentonite which has hardened, wasting a significant portion of completed work. Cement-bentonite backfill undergoes shrinkage and cracking during drying; large variations in ground-water levels can render this backfill pervious if drying occurs. Laboratory tests on properly designed CB backfills indicate permeabilities of about $1 \times 10^{-6}$ cm/sec.

Plastic concrete backfill slurry trenches*

5. Plastic concrete (PC) backfill slurry trenches are constructed in panels using the following procedure (Figure 2). First, a panel is excavated by auger (Figure 3), backhoe, and/or clamshell bucket (Figure 4) down to the specified panel subgrade. The excavation is filled with a bentonite stabilizing slurry as the excavation advances downward. At the completion of the

---

* The design of PC mixers and construction of PC cutoff walls is covered in subsequent paragraphs.

excavation of a panel, the bentonite slurry is cleaned through a desanding operation (Figure 5). The panel is then filled with a specially designed PC mix (Figure 6 or 9). The PC mix is designed to provide ultimate strengths $f'_c$ at 28 days in the range of 500 to 1,000 psi (Figure 12) and nominal permeability k of approximately $1 \times 10^{-7}$ cm/sec.

6. This method is most practical for the construction of deep cutoff walls in dense soils and soft rock requiring a key into impervious strata since excavation can be performed in panels using heavy clamshell buckets and chisels to remove hard lenses of soil and rock. The method is not time-dependent inasmuch as panels can remain open for as long as necessary to complete the excavation. The method can be used in remedial work on existing dams and levees since the short panels are stable and cause minimal disruption to existing soil.

7. Due to the low permeability and high strength of the PC backfill it is possible to use a thinner cutoff wall. Furthermore, PC backfills have sufficient structural strength that hydraulic fracturing or migration of fines under hydraulic head is not of concern. For this method, the thickness of the cutoff wall is, in most cases, dictated by the minimum width of the excavating tools. With 2-ft-wide tools the panels can be excavated to depths far in excess of 100 ft.

8. This method is an extension of the conventional slurry wall technology that has been successfully used to cut off seepage from dams, dikes, and levees, and to construct deep basement and subway structures since the late 1940's.

9. The joining of individual panels is obtained either through the reexcavation of previously placed plastic concrete when constructing adjacent panels (Figure 7) or by the slip forming of joints at the ends of consecutive panels through the use of end stops or pipes (Figures 8, 9, 10, and 11). The former is known as the overbite method and the latter as the end pipe method. Laboratory tests on properly designed PC backfills indicate permeabilities in the range of $1 \times 10^{-7}$ to $1 \times 10^{-10}$ cm/sec, with permeability increasing with sample age.

## Guide Walls

10. Guide walls are essential for the accurate control of the alignment

and elevations of a PC cutoff wall. They serve as a guide for the excavation and prevent the collapse of the trench at ground surface.

## Panel Dimension and Arrangement

11. Panel dimensions are usually controlled by both the technical requirements of the work and the type and size of equipment available. Panel lengths can be no shorter than the length of the bucket and no thinner than the width of the bucket. Short panel lengths are usually in the range of 7 ft and should be used in loose unstable materials or in areas where there are very high surcharge pressures from adjacent structures or slopes. Longer panels, ranging up to 30 ft in length, can be used in cohesive soils or other stable materials. Wall thickness is usually 24, 30, or 36 inches.

12. The bottom of wall elevations are governed by the location of the top of rock, by the need to embed the wall in impervious strata, and by the need to prolongate flow lines through pervious strata.

13. If the bottom of the wall is to be seated on rock, care must be taken to verify the location and nature of the top of the rock. The top of the rock must be satisfactorily cleaned prior to the placement of concrete in the panel.

14. If the bottom of the wall is to be seated in a rock socket, the rock socket should be sufficiently deep to provide the function required, i.e., lateral support, load bearing, or watertightness. Reinforcing cages are usually not required.

## Construction Joints Between Panels

15. Construction joints between panels are achieved in a variety of ways. The most basic and simplest method is the half-round joint formed by a stop end pipe or a joint formed with steel wide-flanged sections. Less often used are joints formed by square-end buckets and joints incorporating sheet-pile sections or break-away keys set into the pour. Complicated joint details are expensive, as well as difficult to install, and perform unsatisfactorily in less than ideal conditions.

16. Occasionally the overbite method is used. Great care must be taken to ensure sufficient overlap and lateral alignment. Overstrength concrete can hamper excavation of the overbite.

## Design of Plastic Concrete Mixes

17. Plastic concrete mixes incorporate various proportions of cement, bentonite, fly ash, local aggregates, and local water with the intended purpose of providing an economical mix that is easily placed, highly impervious, and resistant to local permeant water.

18. Because of variations in materials, mixing equipment, and skilled labor, it is difficult to recommend a specific concrete mix design; however there are several rules that should be followed in the design of the mix. Hard gravel is preferred over crushed, gap-graded stone; the aggregates used in the mix should be well-graded. A sandier (45 to 50 percent sand) mix similar to pump-crete mix will flow better in a tremie pipe and throughout the panel and is therefore preferred. Plasticizers and air entrainment mixtures are recommended. Design mixes should be of as low an ultimate strength as practical (less than 1000 psi) (Figure 12) and should be designed and tested with enough water to guarantee that an 8-in. slump will be achieved.

19. Tests should be conducted to determine the lowest practical strength for the intended use. A low modulus of elasticity and high strain at failure are desirable (Figures 13 and 14).

20. It is important that all personnel involved in the execution of the work understand that an 8-in. slump is essential for the proper casting of panels and that the field staff will not be permitted to tamper with the mix. Laboratory testing of the mix should be performed to determine the following:

a. Permeability with site water.

b. Ultimate strength.

c. Modulus of elasticity.

d. Strain at failure.

## Concrete Placement

21. If excavations are performed in fine sand, or with percussion tools used to drill boulders or bedrock, it is imperative that the panel be cleaned prior to the placement of the concrete. Otherwise, fine sand particles will settle to the bottom of the panel or, if held in suspension by the bentonite, will mix with the concrete and form pockets of "mud" in the panel.

22. Panel cleaning can be done by an airlift and desander (Figure 5) at the trench, by complete replacement of contaminated bentonite with fresh bentonite, or by cleaning the bottom with a "toothless" clamshell bucket.

23. A single 8- or 10-in.-diam tremie pipe centrally located within the panel is recommended. The tremie hopper should be large enough to receive the occasional surge of concrete and prevent the spillage of concrete from the hopper into the trench (Figure 11).

24. The concrete pour should proceed as rapidly as possible. However, it should always be timed in such a manner that a continuous placement of concrete is maintained. Disruptions in the delivery of concrete guarantee a cold joint in the panel and a future source of leakage.

25. At the conclusion of concrete placement, the stop end pipe must be extracted from the excavation; it must be removed at a rate slow enough that it is never raised above the level at which the concrete has already set and at a rate fast enough that the pipe will not become stuck within the panel (Figure 9). In the overbite method, the concrete is permitted to set and gain minimal strength. Excavation of an adjacent panel must take place within a short period of time in order to permit easy removal of the fresh concrete.

## Quality of the In-Place Concrete

26. If a correctly designed mix has been properly placed, it is almost impossible for the concrete not to achieve its designs strengths. (The problem is that the concrete usually exceeds desired strength.) Experience has shown that cylinders taken during the pour usually show concrete strengths 10 to 50 percent greater than the strength specified, and that cores taken from a wall even under the most disadvantageous placement conditions are apt to have strengths equal to, or more than, 50 percent greater than the strength specified. The goal in plastic concrete mixes is to obtain a low strength, low modulus of elasticity, and a high strain at failure (Figures 12 to 14).

## Accuracy, Tolerances, and Finish

27. Construction accuracy and finishes are dependent upon the geology of the site and the contractor's skill and tools. However, properly executed construction should fall within the following tolerances:

The vertical joint at the end of a panel formed with an end pipe should fall within 6 in. of the specified location. The wall should be within 1 percent of verticality.

28. Properly executed cutoff walls are watertight throughout the panel. Occasionally seepage will occur at the vertical joint between panels or at cold joints.

29. Leaks are the responsibility of the slurry wall contractor and will be sealed with chemical or cement grout inserted into the soil directly behind the wall at the location of the leak. Occasionally grout pipes are placed directly in the joint and pressure grouted after the concrete sets.

## Conclusions

30. Plastic concrete cutoff walls can be successfully constructed to depths in excess of 100 ft in various geologic environments. The walls can be keyed into hard, impervious strata and can be joined, panel to panel, using a variety of techniques.

31. High-strength impervious concrete backfills can be obtained using mixtures of coarse and fine aggregates, cement, bentonite, and fly ash. Low strength, low modulus of elasticity, and high strain at failure are desirable properties.

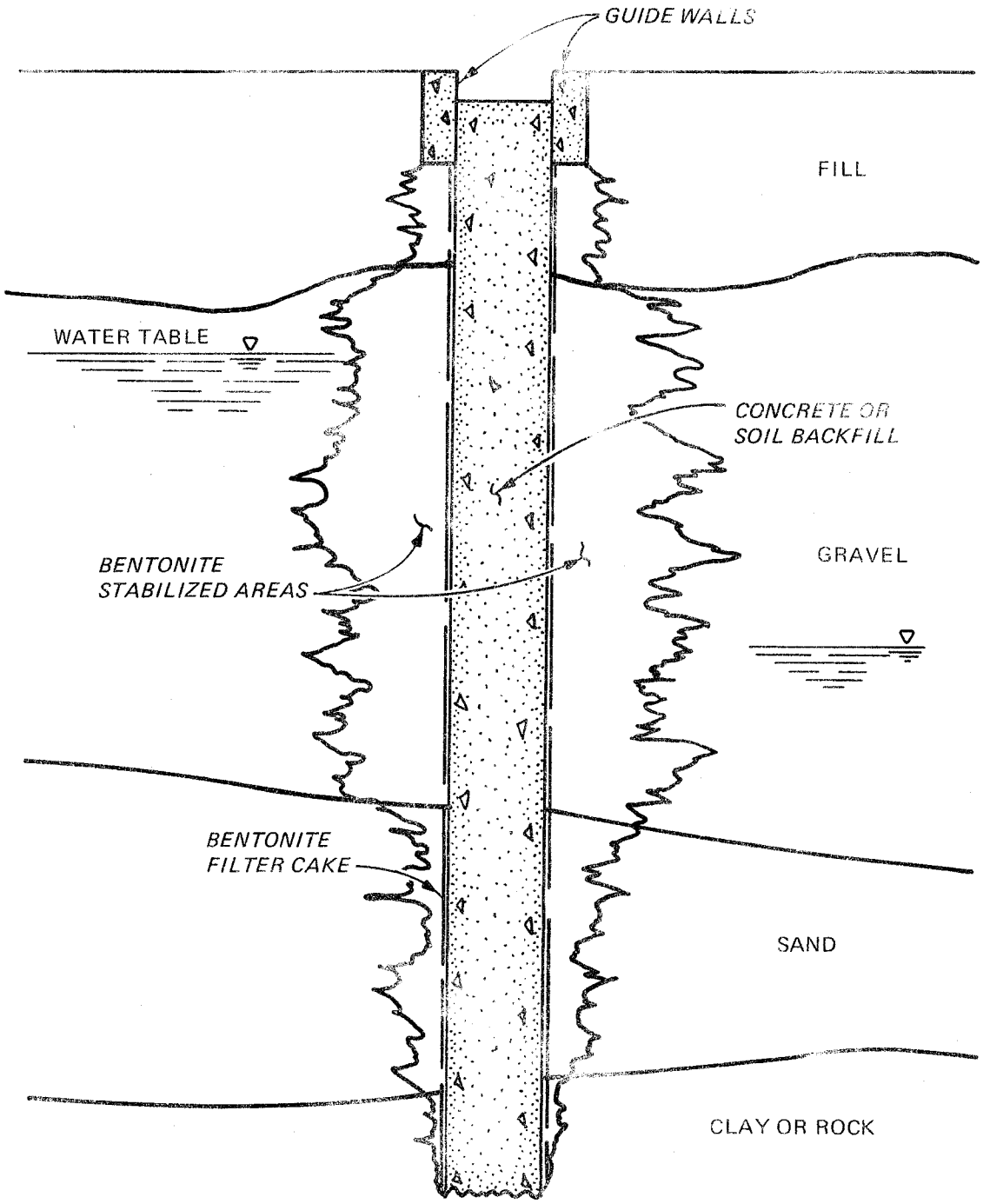


Figure 1. Bentonite slurry in various soils

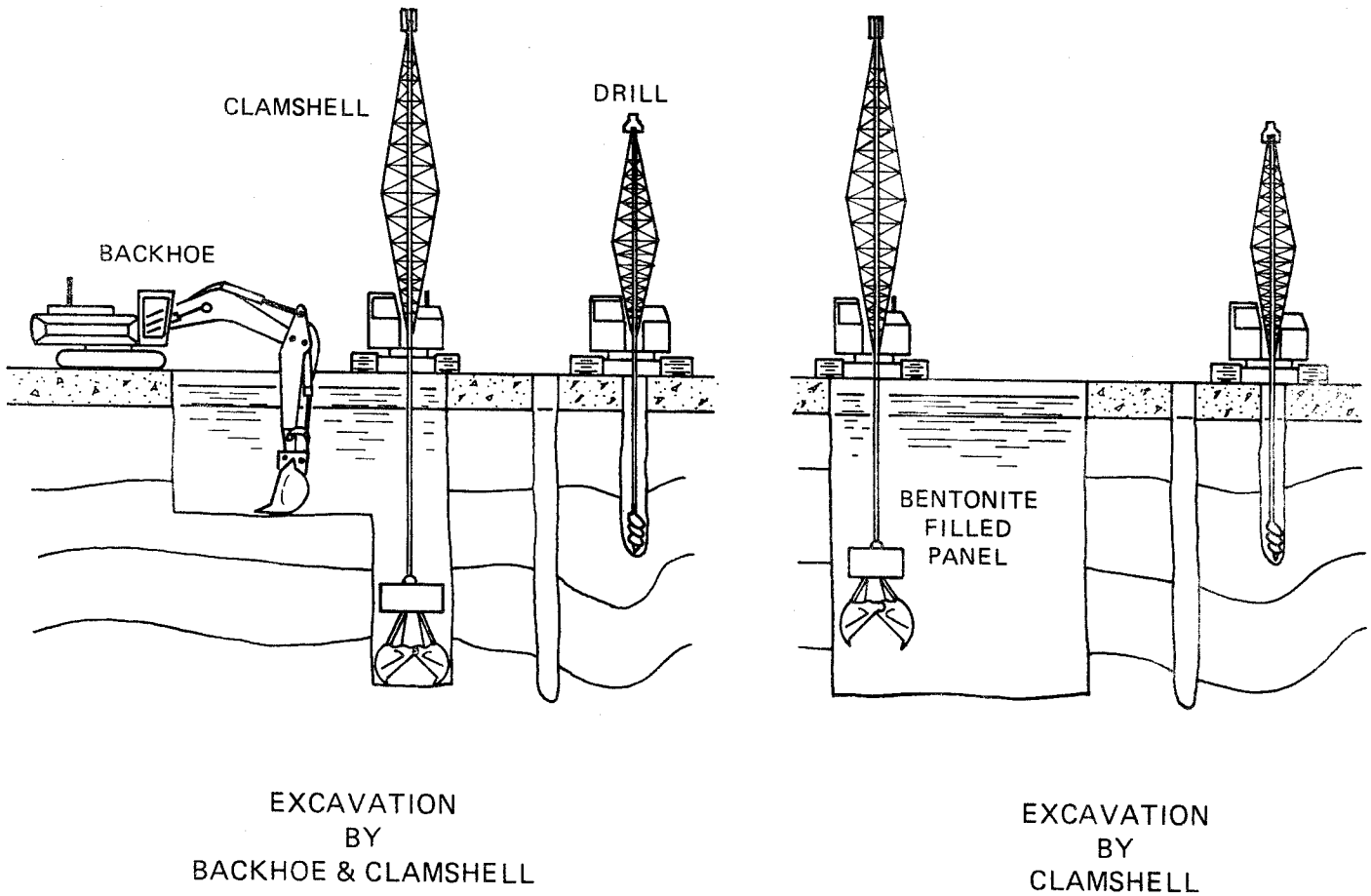


Figure 2. Panel wall construction

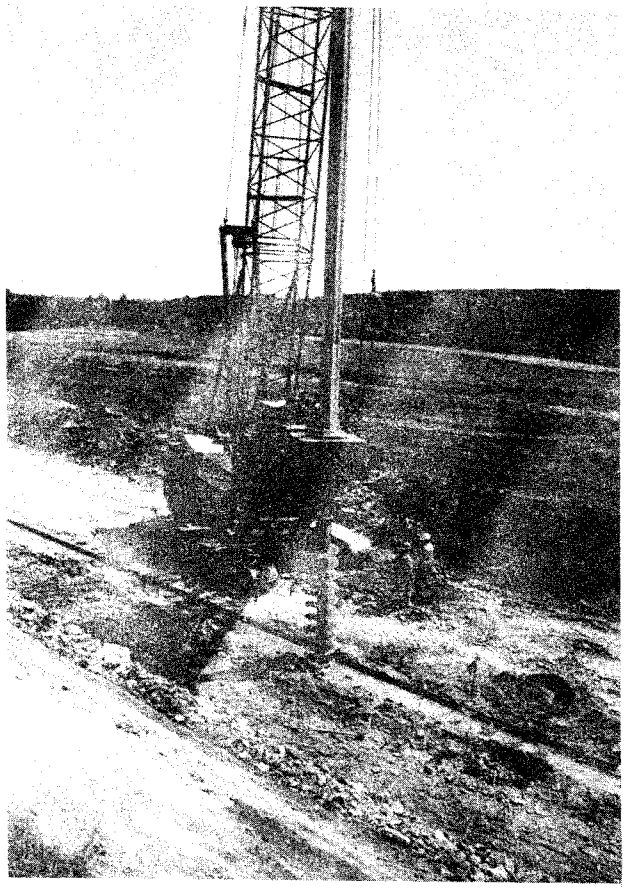

Figure 3. Auger

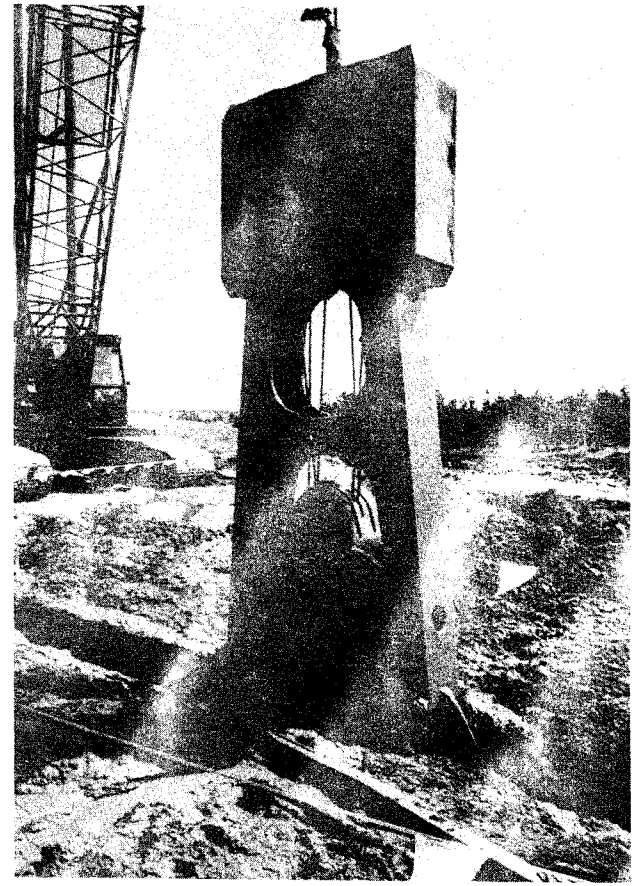

Figure 4. Clamshell bucket

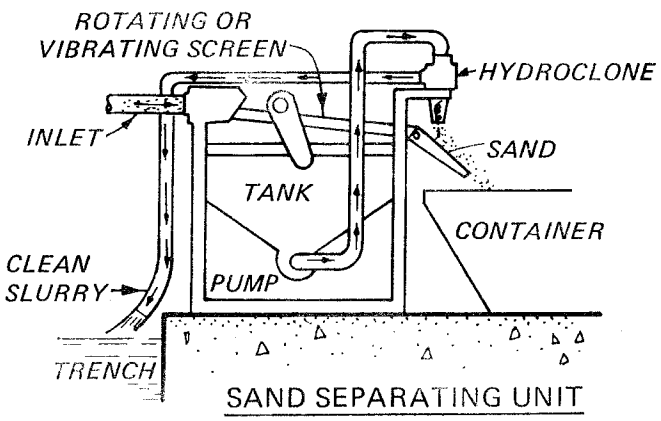


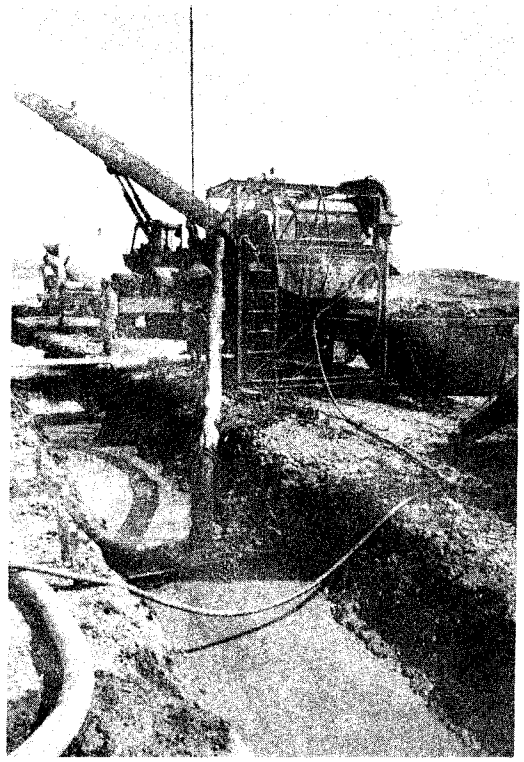

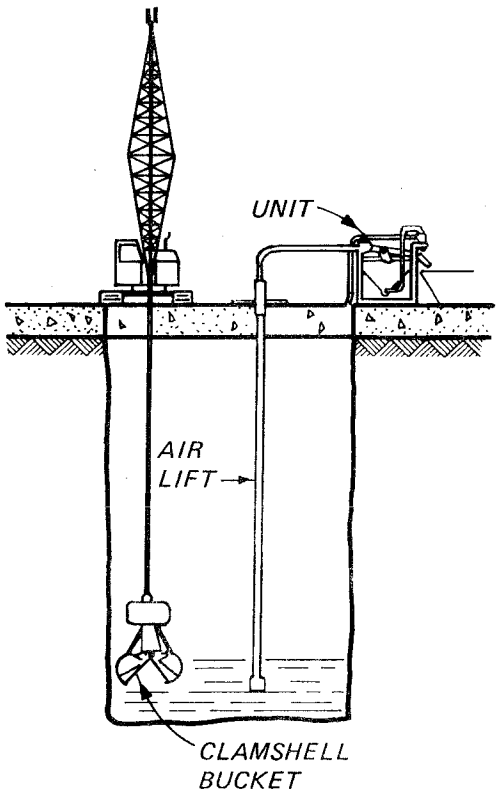


Figure 5. Cleanup with sand separator unit

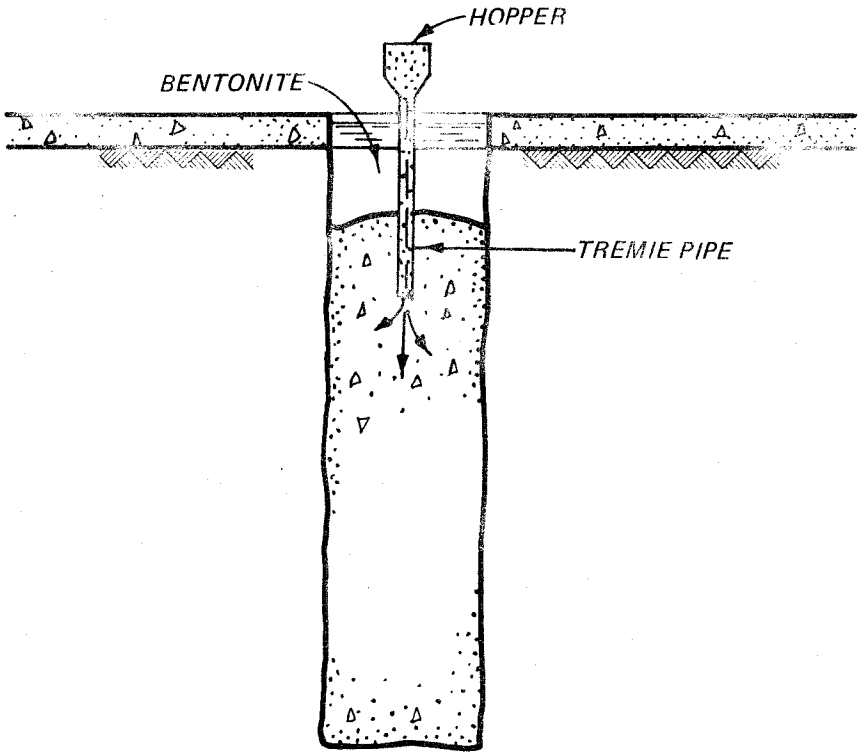


Figure 6. Placement of concrete overbite method

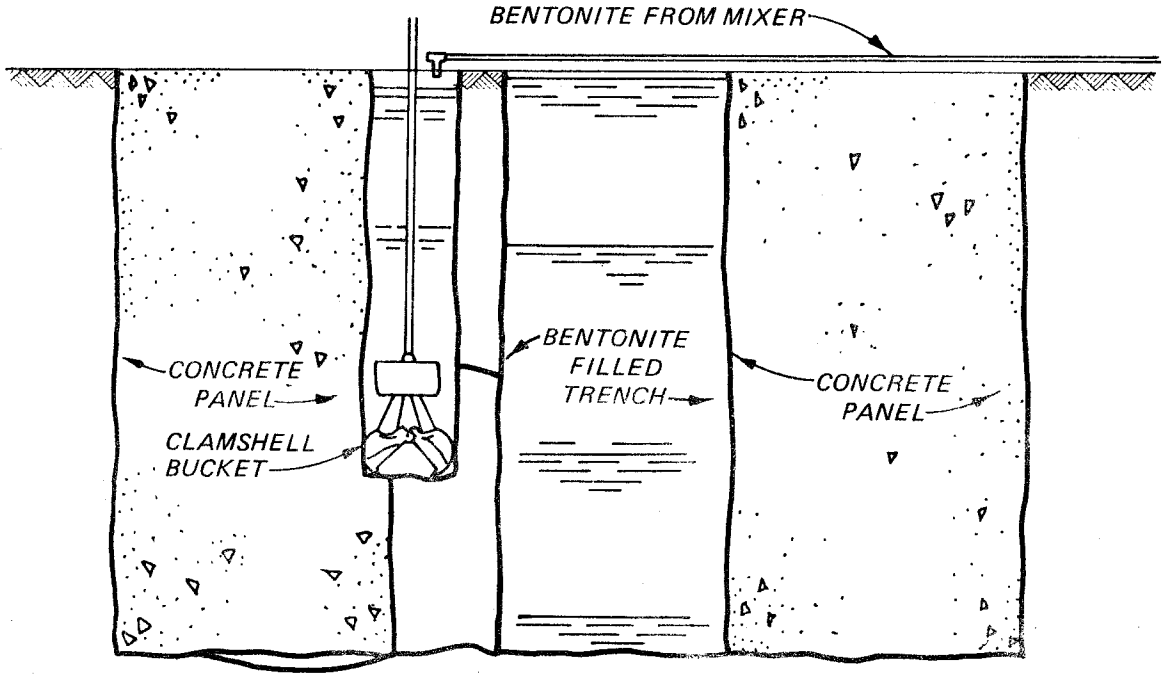


Figure 7. Excavation by clamshell bucket overbite method

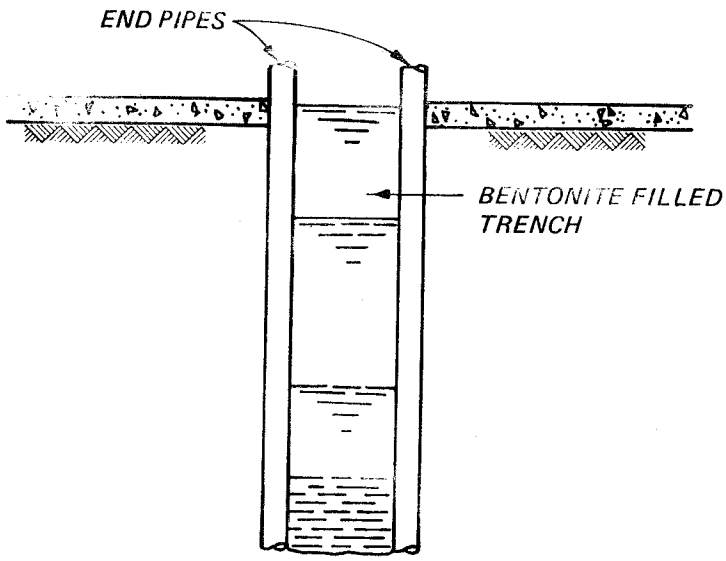


Figure 8. Preparations for concrete placement end pipe method

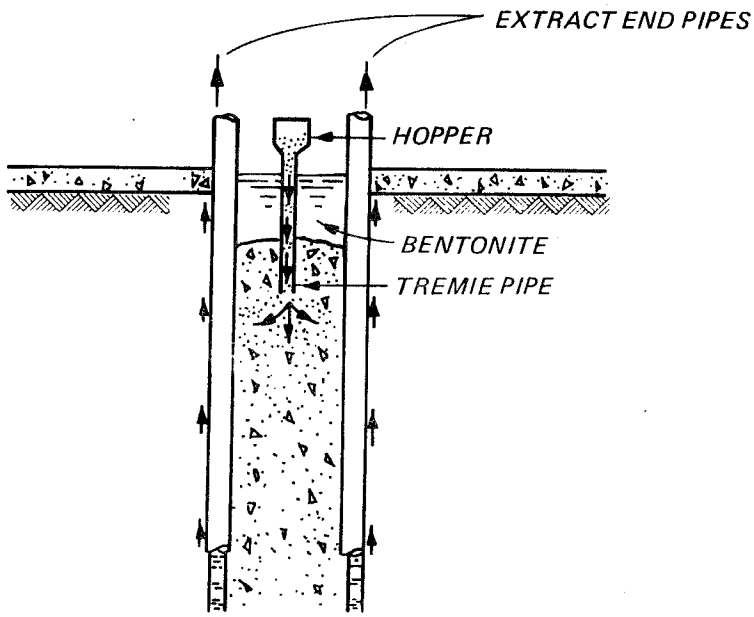


Figure 9. Placement of concrete end pipe method

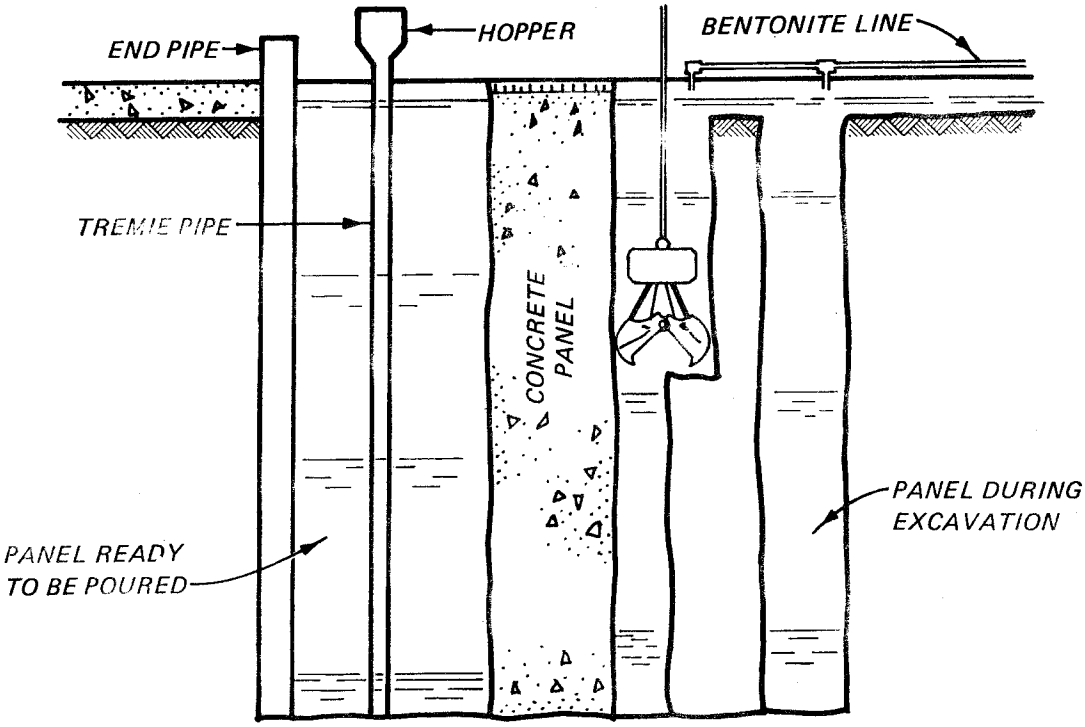


Figure 10. Different phases of construction end pipe method

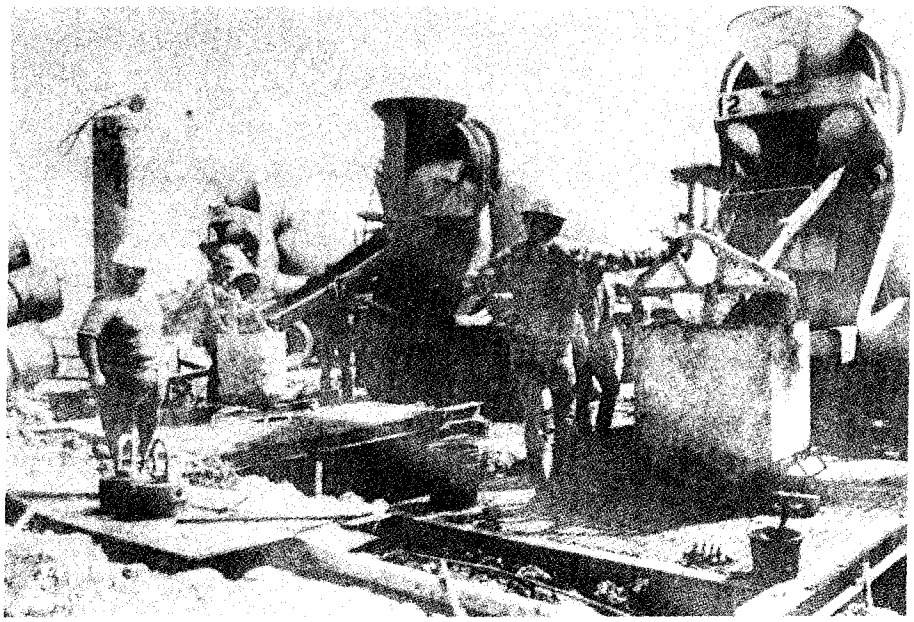

Figure 11. Concrete placement with two tremie pipes and end pipes in place

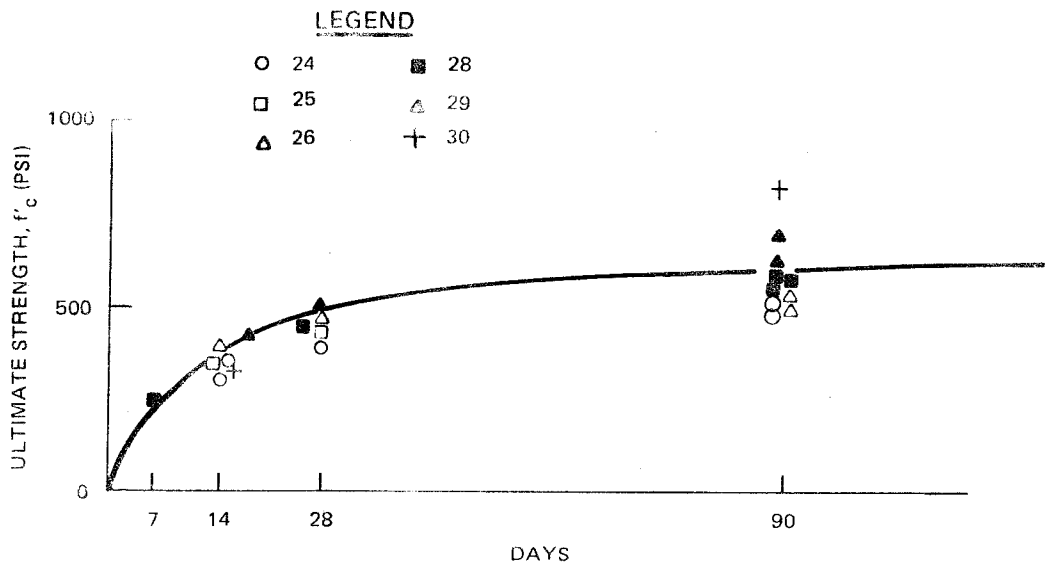


Figure 12. Plastic concrete ultimate strength

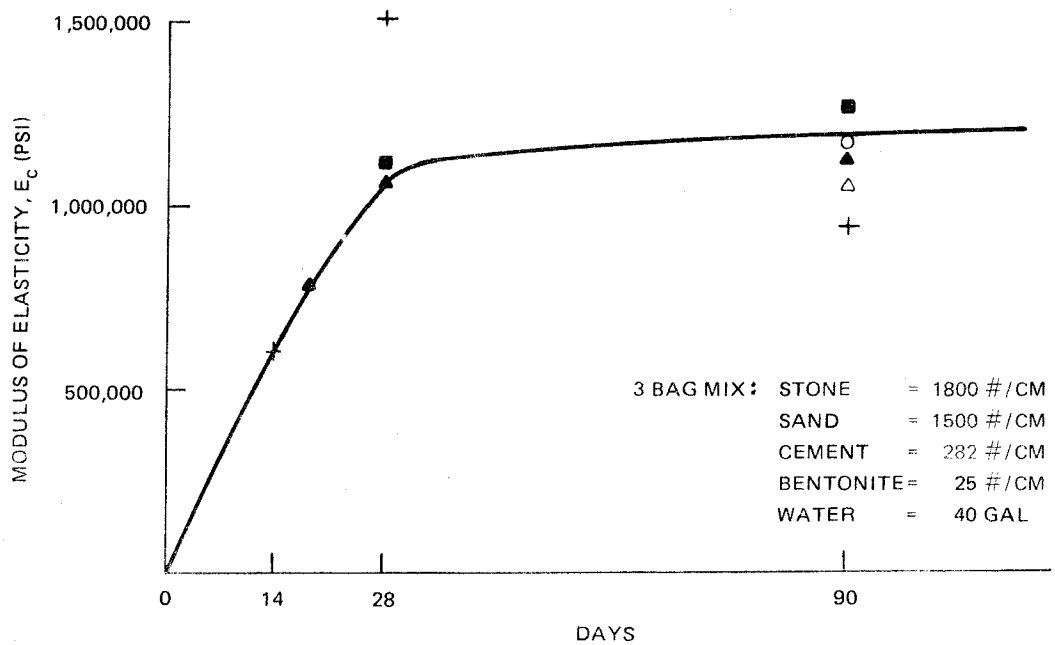


NOTE: EACH NUMBER REPRESENTS THE RESULTS FROM A BATCH POURED INTO A PANEL ON A PARTICULAR DAY.

Figure 13. Modulus of elasticity

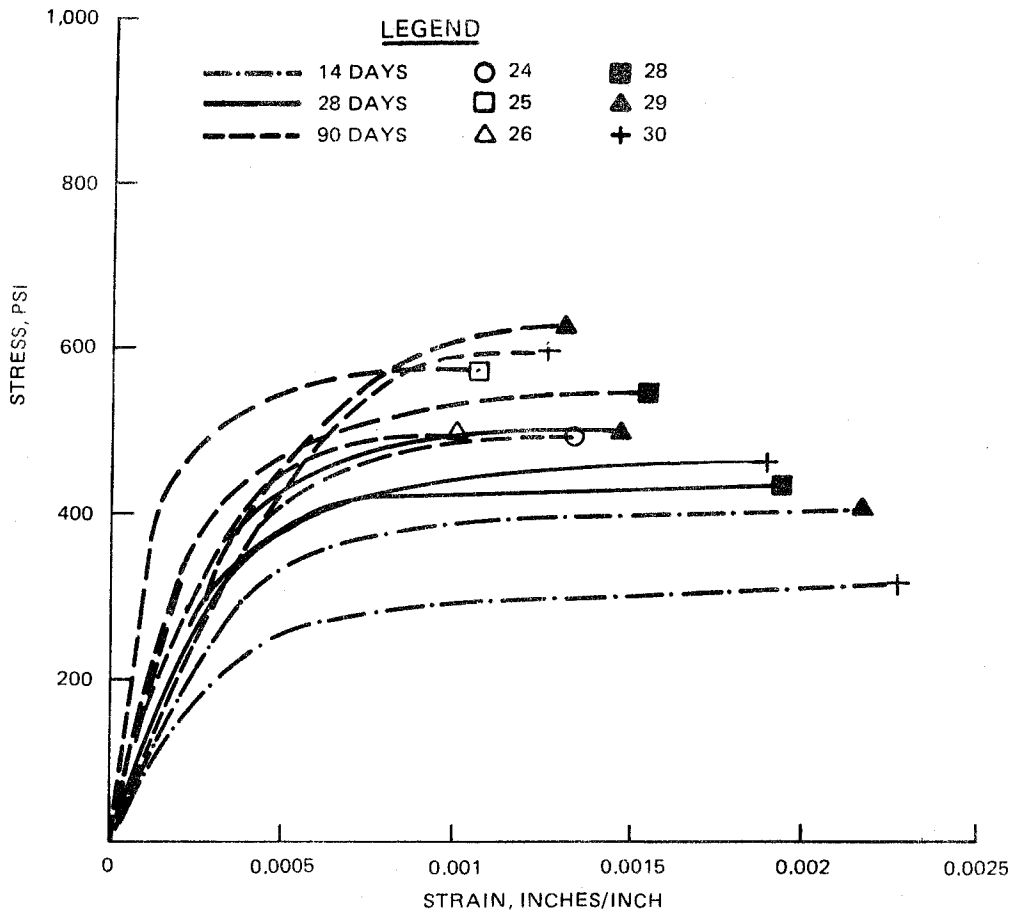


NOTE: EACH NUMBER REPRESENTS THE RESULTS FROM A BATCH POURED INTO A PANEL ON A PARTICULAR DAY.

Figure 14. Stress-strain relationship

# GROUND FREEZING AS A CONSTRUCTION EXPEDIENCY FOR EXCAVATING CUTOFF TRENCHES AND/OR INSTALLATION OF DRAINS

John A Shuster
Geocentric

## Background

1. Controlled ground freezing for mining and construction applications has been in use for over a century. Despite the great technological evolution which has occurred during this period, the application of new developments to the art of ground freezing, especially in the United States, has been slow. Considering the fact that freezing is a more widely specified and successfully used construction procedure in Europe and Asia, and that common alternatives normally used for temporary construction are becoming more costly in the United States, it is important that US industry become aware of this important construction technique.

## Purpose and Scope

2. In view of the current state-of-the-art, it is desirable to examine ground freezing in light of recent technical developments, together with highlights on some of the apparent advantages, disadvantages and economics of the various alternative construction approaches. The purpose of this paper is to attempt briefly such an examination, with particular emphasis on the practical application of presently available technology.

## General Description of Construction Ground Freezing

3. Ground freezing employs the use of refrigeration to convert in-situ pore water to ice. The ice then acts as a cement or glue bonding together adjacent particles of soil or blocks of rock to increase their combined strength and make them impervious. Ice is the only thing that makes frozen ground different from unfrozen ground. It is the key component of the system, and its mechanical properties are much more dependent on time and temperature than the geology of the strata in which it occurs.

4. Essentially all ground freezing projects require one or more of the following:

a. Structural support by stressed frozen earth, or

b. Structural support by the mass of an essentially slightly-stressed zone of frozen ground, or

c. Ground water control by an impervious frozen earth barrier.

5. Ground freezing may be used in any soil or rock formation, regardless of structure, grain size or permeability; however, it is better suited to soft ground rather than rock conditions. Freezing may be used for analysis, shape or depth of excavation and the same physical plant can be used from job to job despite wide variation in these factors.

6. Freezing is normally used to provide:

a. Structural underpinning,

b. Ground stabilization,

c. Temporary support for an excavation, or

d. To prevent groundwater flow into an excavated area.

As the impervious frozen earth barrier is constructed prior to excavation, it generally eliminates the need for additional ground support or dewatering, or the concern for adjacent ground subsidence during dewatering or excavation. However, lateral groundwater flows may result in failure of the freezing program if not properly considered during planning. Further, though subsidence may not be of concern, ground movements resulting from frost expansion of the soil during freezing may occur under certain conditions, and this potential must be considered in planning.

7. Contrary to popular belief, freezing can be completed rapidly if necessary, or desirable. However, the freezing rate can be directly related to overall costs and rapid freezing, particularly with Liquid Nitrogen or Liquid Carbon Dioxide, is relatively more costly than slower freezing.

8. Frozen ground behaves as a visco-plastic material with strength properties which are primarily dependent on the ice content, duration of applied load, and the temperature of the ground. The type and texture of the ground are relatively less important. For this reason, a frozen ground barrier is extremely versatile. Within limits, it is relatively insensitive to advance geologic prediction. This is particularly advantageous for tunneling by changing the temperature or duration of loading, it will usually be possible to

accommodate all types of ground conditions on a project with one freezing scheme.

## Initial Evaluation of Technical Feasibility

### Site related factors

9. A brief examination of the overall site geology, together with the geometry of the planned excavation relative to existing structures, is probably the first step in limiting the practical construction alternatives for a project - whether an open-surface excavation or a subsurface excavation, such as a tunnel.

a. Excavation geometry - configuration, depth, space for open cut, proximity to existing structures and utilities (above and below ground).

A frozen earth barrier will normally be a meter, or more thick; hence, may require greater clearances, but it is not limited by depth, as say piling or dewatering would be. A frozen barrier can also be installed in any geometry and any angle from vertical to horizontal. Furthermore, as it is installed prior to excavation, it may function as underpinning for adjacent structures as well as excavation support and groundwater control.

b. Soil and rock conditions - Because a frozen earth barrier is less sensitive to geologic conditions and prediction than other alternatives, it is probable that site geology will frequently be the main reason for selecting freezing.

Freezing is attractive where pile driving depth is limited, or where driving is difficult or would cause unwanted settlements. Freezing can be conducted in areas underlain by building rubble, piles and old foundation where other alternatives would be extremely difficult. Soft or running ground and high lateral soil or water pressures favor freezing. Soil and rock profiles which are too heterogeneous to grout predictably may readily be frozen.

On the negative side, soils of low thermal conductivity such as silts and clays, or inorganic sea shells, take a long time to freeze and have poor structural properties when frozen. Depending on the specific conditions, some silty and clayey soils will undergo considerable volumetric expansion when frozen.

In heterogeneous ground, the frozen zone will be irregular in shape. Even without laboratory tests a general knowledge of the materials to be frozen will provide valuable insight as to the probable shape of the frozen zone and facilitate prediction of those areas which may be critical.

As a rule, in the absence of flowing water, the shape of the frozen zone after a relatively short freezing period is

primarily dependent upon the frozen thermal conductivity of the strata. This parameter may vary by a factor of only 4 or 5 being lowest for organic silts and clays and highest for sand and rock. In comparison, the permeabilities of these strata would range over several orders of magnitude. It is this fundamental difference between the possible ranges of thermal conductivity and permeability which makes freezing more controllable than grouting in a heterogeneous profile.

For any given refrigerant temperature, the relatively thinner frozen zones will normally occur in silts, clays, organic soils, and sea-shell beds. These are also the weaker strata; hence, structural analysis and design will frequently be dictated by these materials.

Frozen bedrock is not necessarily stronger than the overlying soil. The performance of frozen jointed rock is largely a function of the joint system and the behavior of the interstitial ice. Though the ice will serve to bond jointed rock, the ice itself has little long-term strength.

c. Site groundwater conditions - Most of the problems and failures which have occurred on freezing projects have been related to groundwater flow. If water flowing into the freezing zone supplies energy at a greater rate than it can be removed by the refrigeration plant, the zone will not freeze. For circulating coolant systems, the maximum rate of water flow which can routinely be frozen is of the order of 1 to 2 m per day. Rates of flow greater than this require special consideration. For liquid nitrogen systems, flows as high as 50 m per day have been stopped. However, the amount of energy and time required are increased substantially. The increase in required time is directly proportional to the increase in energy which must be removed.

As with most thermal considerations, the spacing of the freezing elements, the temperature and flow the refrigerant (coolant) are critical. Empirical techniques have been developed for approximately calculating the maximum spacing which can be used for any given temperature and groundwater flow. These techniques provide useful guidelines, but they are imprecise. A rule of thumb approach is to combine the normal refrigeration load per unit length of freezing element with the additional load which may be expected, for any given element spacing, due to water flow. The refrigeration plant selected must then have a capacity, at the prescribed temperature, greater than these combined loads - including a safety factor.

At present the critical factors which control freezing in the presence of groundwater flow are reasonably well-known and they have been combined into a comprehensive analytic approach for design. However, sufficient data from projects are not yet available to confirm the design procedure. Considering the importance of this information, additional research is needed in this area. As a practical matter where groundwater flows are expected, freezing element spacing should be close and alignment

carefully controlled. Further, the coldest practical refrigerants should be used.

The feasibility of dewatering and the potential effect of dewatering on adjacent structures may govern the selection of the freezing approach. On sites where dewatering is either not feasible or economically impractical, freezing becomes an attractive alternative. Also, for excavations where site or work conditions require the use of a pump(s) manned twenty-four hours a day, freezing automatically becomes more attractive. The same man who would have operated the pump can operate the refrigeration plants instead; thus combining excavation support with groundwater control at little or no additional labor cost.

Ground which is too dry - say less than 10% saturated - cannot be frozen unless water can be introduced prior to, or during, freezing. This has been done on projects in the past, but requires special considerations.

The quality of the groundwater may significantly affect the performance of the frozen barrier. The presence of dissolved salts or hydrocarbons in large quantities will prevent freezing or reduce the strength of frozen material at any given temperature. Because of this, the salinity of the groundwater or the concentration of hydrocarbons should be determined when there is doubt. Further, where saline groundwater conditions exist, frozen strength properties should be determined by laboratory tests or extrapolation of data from prior tests on saline soils. Extrapolation of existing strength data obtained for materials containing fresh water is not recommended.

With proper understanding and planning, almost anything can be frozen.

d. Anticipated loading - Static loads imposed by earth, water and existing structural pressures will normally govern design. However, dynamic loading must be checked when applicable, and for structures such as Class I structures for nuclear power plants, the design will probably be governed by seismic or other disaster-type loadings. In fine-grained soils where the soils are confined, ice pressure must also be considered.

e. Ground movement - The settlement, heave and lateral displacement criteria for adjacent structures and utilities will be an important influence on the decision whether or not to use freezing. Freezing under the right conditions will essentially provide a rigid support system eliminating any concern for movements of any kind. Conversely, under the wrong conditions, freezing can induce movements which would not otherwise occur.

Two type of potential ground movements must be considered in the design of a temporary frozen ground support system; these are movements due to creep, and frost effects.

Ground movements after excavation can theoretically occur due to creep relaxation of the frozen zone after prolonged loading. However, as a practical matter it is rarely of concern. The

amount of creep which will occur under any given stress is small and determinable hence, displacements under field conditions are small and more or less predictable and within the control of the designer.

Ground movements due to frost expansion occur only in some soils. The movements result from two different phenomena:

(1) Basic frost expansion due to the conversion of existing pore water to ice during freezing, and

(2) Secondary frost expansion due to pore water migration and ice segregation with time at the freezing isotherm or in the frozen zone.

These two phenomena occur simultaneously; however, they differ in predictability and magnitude. Further, when secondary frost expansion occurs, it may continue after the freezing isotherm is no longer advancing. For these reasons, the two phenomena are considered separately.

Clean free draining sands and gravels are generally not susceptible to either type of frost expansion. Basic frost expansion is avoided in these soils because of their high permeability. During freezing, water is forced out of the soil at the same rate as freezing progresses resulting in a lower frozen water content without volume change. Secondary frost expansion is closely related to capillarity and pore water pressure. In clean free draining sands and gravels, the potential capillary head is small or non-existent; hence, the soil will not support appreciable water migration, and secondary frost expansion will not occur. As the percentage of silt and clay size particles increases in a soil, the permeability is reduced, capillarity increased, and basic frost expansion may occur if the water conditions are right and the freezing rate exceeds the rate at which the water can be forced out. Confining pressure will reduce the apparent frost expansion, particularly in coarser materials.

Basic frost expansion is relatively small and predictable (9% or less of the pore volume). It does not increase with time. In contrast, secondary frost expansion is more difficult to predict and may be much greater. Furthermore, it continues as long as the soil and water conditions remain unchanged and freezing continues.

As a rule, fine silts and lean silt-clay mixtures below the water table usually represent the worst combination of potential combined pressure and permeability. Further, an additional consideration of secondary frost expansion, particularly in these soils, is the possible subsidence and loss of strength which may occur upon thawing.

f. Thermal loads - In addition to the ground movement criteria discussed above, it is necessary to consider thermal criteria, particularly in-service water, sewage or stream lines which would pass through or adjacent to the frozen barrier. Unless

these lines are stagnant for very long periods of time, the thermal load they represent normally are more of a threat to the frozen barrier than vice versa. Because of potential condensation problems, stream lines are probably the most sensitive of the various utilities.

g. Preliminary design - If the aforementioned factors have been considered and freezing appears to be an attractive alternative, then a preliminary structural analysis and design must be undertaken to determine the approximate geometry of the frozen barrier, and whether or not it should be designed as a stressed or unstressed section. The results of this analysis are important for evaluating the economic feasibility of freezing for the project.

Job related factors

10. In addition to the characteristics of the site, there will normally be project constraints which are important. As a rule, such constraints usually have a more important effect on the economic than technical feasibility of the work.

a. Time - two time periods are important. First, how much time is available to form the frozen barrier (prefreezing time). This would be analogous, for example to how much time is available to drive sheeting, dewater and excavate. Longer available time means less expensive freezing. However, where circumstances warrant, and frozen barrier can be completed in a matter of hours after the freezing elements have been installed.

The second important time period is how long must the frozen barrier be maintained after it is in place? In general, where there are other competitive alternatives, frozen barriers are most attractive if they do not have to be maintained for a long period of time.

b. Continuity of work - Can the barrier be installed in one continuous operation, or does the work require multiple mobilizations and complex scheduling which could make for poor equipment utilization?

c. Power, water and space requirements - Refrigeration plants for field use are normally mobile mounted on truck trailers which need only be connected to water, power and the in-situ freezing elements. About 3.5 kilovolt-ampere (440 volts, 3 phase) of power per ton or refrigeration will be required. Where commercial power is not available, diesel generators must be used. The availability and cost of electric energy is a major factor in determining economic feasibility, and may result in the selection of liquid nitrogen or liquid carbon dioxide as an alternative. Water use will normally be of the order of 5 - 10 gallons per minute. For a large project, available storage space for multiple refrigeration plants may be a concern.

d. Personnel and equipment availability - Large mobile refrigeration plants are not commonly available in the United States.

However, it is possible to rent or lease a plant; though it may have to be mobilized a long distance. If obtained from anyone other than a specialty ground freezing subcontractor, the mobilization may be quite costly, as all of the ancillary equipment which is normally an integrated part of a mobile plant must be assembled on multiple skids, shipped to the site and field connected. This factor may offer an economic advantage for LN or LCO2 on some projects, as no refrigeration plant is required when expendable refrigerants are used.

Because of the rather unique nature of mobile refrigeration plants, the availability of equipment to do the work may govern the technical feasibility of a project.

The availability of trades personnel to install and operate a freezing system should be no problem. Normally, on union projects, the work is distributed between the Operating Engineers and the Laborers; the installation being much the same as a well point dewatering system. However, though the craftsmen may be available to assemble and operate the equipment, it may be difficult to locate anyone sufficiently familiar with the process to design, organize and control the work. Ground freezing is much like chemical grouting in that a thorough understanding is necessary to ensure success. The availability of such personnel, usually from speciality firms may govern the technical feasibility of a project.

As a rule, because of the specialized equipment and personnel constraints, ground freezing is normally a speciality subcontract item. It has been used with varied success by General Contractors marginally familiar with it. In general, it is important to be very selective in choosing a ground freezing subcontractor or consultant. A careful review of credentials and past performance are a must.

Material availability - Ground freezing require a relatively small amount of materials, principally steel (or aluminum), pipe, rubber hose and plastic tubing. Most alternative construction methods, particularly those for excavation support require large amounts of timber, concrete, and steel. These materials are becoming increasingly costly and difficult to obtain with reliably delivery. Further, from the standpoint of conservation, freezing does not deplete these natural resource materials by using them for temporary construction applications where they will be abandoned with the permanent construction is in place.

Because of these concerns, freezing will probably be increasingly attractive in the future.

## Initial Evaluation of Economic Feasibility

11. Excluding considerations of the contractor's capability, the actual direct costs of freezing for a specific project will depend largely on the

ground conditions, the spacing of the freezing elements, the time available, and the type of refrigeration system used.

12. Given a competent freezing contractor, the relative economics of ground freezing are critically dependent on the specific conditions and requirements of a project. Furthermore, to properly evaluate the relative economics of various alternatives means of temporary ground support, it is necessary to consider their effect on the total project costs, rather than the direct costs of the specific alternative as a single item of work. In some cases, the direct costs of freezing alone may appear somewhat higher than the direct costs of another alternative; however, when indirect costs required with the alternatives are considered - such as dewatering, compressed air, shield, congested excavation and building area, spoil disposal, space required, material availability, etc., the actual total costs may favor the freezing approach.

13. Any consideration of costs must include an estimate of the probability of success. For example, grouting may appear economically competitive or advantageous for a project. However, heterogeneity of the formation and a wide range in permeability, which commonly occurs, may cause the approach to be unsuccessful. Freezing is more predictable and less difficult to control than grouting; hence, because of increased confidence, a properly engineered freezing scheme may be more attractive.

14. Though it is difficult to make any generalized statements regarding the relative costs of freezing, it is probable that the method will be competitive for supporting open excavations greater than about 7 to 8 meter deep in bouldery, soft, or running ground, particularly sands, and for subsurface excavations in similar soils or mixed soil-rock face, particularly below the water table. These generalizations will probably be especially true in urban areas where concern for underpinning of adjacent structures and utilities is a major concern.

## Design Considerations

15. If, after a preliminary feasibility analysis, it appears desirable to consider freezing as one of the prime alternatives for the work, then a complete design must be undertaken to obtain a final evaluation. This initial design need not be as thorough and detailed as will be required for

construction, but it should be adequate to cover all of the important considerations. Though a presentation of detailed design procedures is beyond the scope of this seminar, we will briefly discuss several of the more important factors which must be considered in planning and executing a ground freezing project, and our present ability to predict field performance as related to each of them. As a rule, design is based on a number of interrelated factors; hence, an optimum design is normally a trial and error iterative process. The amount of effort put into such optimization obviously depends on the relative size and importance of the project.

16. If the frozen barrier is for groundwater control only, or will be essentially unstressed, then structural design is a simple matter of statics and the available time for completion of the barrier will be the key factor governing design. The design in this case would be primarily based on thermal analyses.

17. If the barrier is to be stressed then the ground temperatures and duration of applied stresses will be important. Under these circumstances, the thermal and structural design procedures proceed more or less in parallel - starting from initial separate assumptions and converging to a compatible result. For circular shafts the procedure is simple; for tunnels, diaphragms, arches, etc., the procedure becomes complex. Though the thermal and structural design is normally combined, we will separate the two for clarity.

Thermal analyses

18. The thermal design consists of the following:

a. Thermal properties and methods of obtaining them - The thermal properties (latent heat, specific heat and conductivity) of the ground are primarily dependent on the mineral/textural nature of the ground and its water content. Tests of laboratory samples are of limited value and published data are probably adequate for most jobs. The range of values for the variables is fairly small, and the resultant thermal calculations will be most critically affected by water content. The more water the slower the rate of freezing and the more energy required.

In-situ methods of measurements are available. They have been used primarily for measuring glacial ice properties, but it is only a matter of time before they will be applied to soil and rock.

Freezing rates - The amount of thermal energy and duration of time necessary to complete freezing may be approximately calculated. The conventional closed form analytic approach is based

on two-dimensional heat conduction theory and assumes isothermal boundary conditions at the freezing elements and in the surrounding ground at some large distance from the freezing elements. Heat transfer during freezing in normally heterogeneous ground is quite complex and more accurate closed form solutions are not presently available. However, for projects of unusual geometry, or with nonuniform thermal loads, the use of finite elements or difference techniques on a digital computer will provide more accurate results and may be justified. Computer analyses may cost several thousand dollars in labor and computer time to set up, run and interpret for several sets of conditions, even with an available program; hence, they would normally be used only for critical situations or more important projects. In view of this, for many smaller or less critical projects of regular geometry, approximate closed form analytic solutions may be expected to remain the principal technique of analysis. Regardless of the analytic technique used, for any given material properties and geometry of frozen earth structure, the most important factors which govern the thermal performance of a freezing project are the size and spacing of the freezing elements. In fact the amount of drilling and material required, the capacity of the refrigeration plant and the time required to complete freezing are all critically dependent on these factors.

The prefreezing period - prior to excavation - is composed of the duration of time necessary for the barrier to close between adjacent freeze elements ($T_1$), and the subsequent time ($T_2$) during which the barrier thickens to meet the requirements of the structural design.

Other things being equal, $T_1$ is exponentially proportional to the relative spacing of the freezing elements ($R^1$). Secondary factors which affect the variation in both $T_1$ and $T_2$ for any given value of R' are soil and refrigerant (coolant) properties. For any given spacing of freezing elements, the required prefreezing time is directly proportional to the energy to be removed from the ground, and inversely proportional to the relative temperature of the outside of the freezing element. For any given ground conditions, relative refrigerant temperature, and spacing of the freezing elements' prefreezing time is significantly affected by the heat transfer efficiency between the refrigerant (coolant) and the freezing element.

The combined effects of very efficient boiling heat transfer, very low temperatures and changes in soil thermal properties at these temperatures account for dramatic differences between the relatively slow freezing time required for a closed circulating coolant system and rapid freezing with an liquid nitrogen system. However, with improper field control of the liquid nitrogen freezing process, the potentially great savings in time may not be realized. Liquid nitrogen is much more difficult to control effectively under field conditions than is circulating coolant.

b. Energy requirements - The thermal energy required to freeze ground is directly proportional to the groundwater content. For coarse-grained soils, the energy requirements are relatively low if no lateral groundwater flow occurs. In fine-grained silt and clay soils, the energy requirement will generally be higher. As a rule of thumb, the energy requirements in K calories per cubic meter of soil frozen will be between 2200 and 2800 times the water content in percent.

The total energy required is dependent on the frozen volume; hence, it is directly proportional to the total length of freezing elements in operation. The total refrigeration load is also dependent on the total length of freezing element. For any given geometry of zone to be frozen, the closer the freezing elements are spaced the greater the total length of elements in operation and the greater the initial refrigeration load, or cost of refrigeration plant. The cost of drilling and materials also goes up as the spacing between adjacent elements is decreased. The net effect of these two factors results in an exponential increase in direct cost and attendant reduction in time. If time is of the essence and an approximate dollar value can be attached to it, it is possible to determine the optimum economic spacing of freezing elements. At close spacing the cost of refrigeration plants with sufficient capacity and related energy exceed the cost of using an expendable refrigerant. When the value of time is considered the optimum spacing, which corresponds to this economic crossover point, may be increased.

The maximum freezing time is theoretically infinite; however, as a practical matter, pipe spacings greater than about 15 times the pipe diameter are not normally used, except with liquid nitrogen systems. Furthermore, at spacings greater than the thickness of the desired frozen zone, the efficiency of energy utilization drops sharply.

The preceding discussion of time, energy and related effects on costs is based on the fundamental assumption that a constant refrigerant (coolant) temperature is maintained in the distribution system and that the refrigeration load varies with time. This is the most rapid, readily controlled and desirable freezing approach. Furthermore, with reliquefaction or expendable refrigerant systems it is the only practical approach. However, when a refrigeration plant of adequate capacity to maintain the desired coolant temperature is not available for a project, the plant is normally run at full constant load and the coolant temperature varies with time. Under these conditions the effect of spacing on direct costs is markedly reduced and the required freezing time is substantially increased. For reasons of plant costs and availability, many projects have been conducted this way. To optimize costs and reduce time when sufficient plant capacity is not available, it may be possible to use an expendable refrigerant to pre-chill the coolant during the initial freezing period when the peak refrigeration load occurs. The use of the expendable refrigerant can be

discontinued when the refrigeration load has been reduced to a point where the plant can maintain the desired coolant temperature.

Within the framework of available technology all of the thermal considerations mentioned are reasonably well understood and the various time-energy relationships can be calculated with acceptable accuracy. Greater information on the thermal properties of earth and their temperature dependence, together with increased use of digital computers, should enhance the flexibility and accuracy of these calculations.

Structural analyses

19. Structural analyses and design with frozen ground is much the same as for unreinforced concrete. The design depends primarily on ground type, groundwater conditions, ground temperatures, rate of excavation, and duration of loading.

a. Selection of material properties and methods of obtaining them - For an essentially unstressed barrier the material properties can be rather crudely estimated. For a stressed barrier, a careful laboratory determination must be made of the actual properties of the frozen soils of the site. On occasion, and especially for smaller projects, data obtained in the past from similar soils may be used with an appropriate factor of safety.

   Frozen ground behaves visco-plastically. Its long term strength and stress-strain characteristics are primarily a function of ice content, temperature and duration of applied load. Presently available test procedures may be used with reasonably good confidence to characterize frozen soil, and to a lesser extent fractured rock. The creep test procedures are straight forward, but they require complex temperature-controlled equipment which is available in very few laboratories in the United States. Further, the interpretation of the test results is technically involved and should be done by someone knowledgeable in frozen ground technology.

b. Structural design - If the mechanical properties of the ground and the maximum probable duration of loading prior to the placement of the permanent ground support is known, a designer can select compatible allowable stresses and ground temperatures. Though design will frequently be dependent on the strength characteristics, it is also necessary to evaluate the displacements which may be expected.

   Though structural designs based on complicated plastic creep analysis are possible for some simplified conditions, most designs are presently based on "cut and try" elastic analysis using parametric values from creep tests, and loading conditions, which are compatible for a given duration of loading. Normally, two trials at different durations of loading will be sufficient to define the most critical duration.

If the delay between initial excavation and the installation of permanent ground support is less than about one shift, the most critical condition will probably occur within two to four hours after excavation. In this short interval, the frozen ground loses a great deal of its initial strength due to primary creep, but has undergone insufficient creep displacement to appreciably reduce the surrounding earth pressures. Design loads for this condition will normally be between at-rest and passive.

If the delay between the initial excavation and the installation of permanent ground support will exceed about one shift, the most critical condition will probably occur at the end of the delay. After this period, the frozen ground has lost most of the strength it will ever lose (at the given temperature) and secondary creep has probably caused some redistribution and reduction of ground pressures. Design loads for this condition will normally be between at-rest and active.

Digital computers can be programmed to include load-history in structural analyses directly; further, they can handle nonlinear material properties and any structural geometry. However, such analyses are relatively costly and would normally be used only for major properties and loadings modified for creep behavior, will probably continue to be the most common technique of analysis for many projects.

Overall design considerations

20. During ground freezing, a number of somewhat unusual factors must be considered. Some of the more important items are discussed below.

21. To control the freezing process and ensure completion of a satisfactory frozen zone, it is necessary to monitor ground temperatures at critical locations. Multi-sensor termistor or copper-constantan thermocouple strings are good for this purpose. However, they may be supplemented by frost penetration monitors. Both types of instrumentation are read periodically to determine ground temperatures and rates of frost penetration. The proper installation and interpretation of this instrumentation is vital. An otherwise successful project may be unnecessarily costly or experience difficulties because of a lack of instrumentation, or proper interpretation of the data obtained from good instrumentation.

22. Ground freezing in areas containing steam, water or sewage lines is best avoided; however, it need not be a matter of particular concern providing:

a. The Contractor knows the utilities are there,

b. That he insulates them sufficiently to maintain the isotherm within the insulation during freezing, and

c. That he monitors their surface temperatures periodically to ensure that the insulation is performing as planned.

23. Steam lines probably represent the most difficult consideration; primarily because any cooling of saturated steam causes undesirable condensation. For this reason, insulation should be sufficient to protect the utility against condensation during minimum flow periods and minimum adjacent ground temperatures. Water and sewage lines should be protected for the same minimum conditions; however, they may be subjected to much greater temperature changes than steam lines without suffering ill effects. Because of this, less insulation will normally be required. The thickness of insulation must also be sufficient to maintain the freezing isotherm within the utility; otherwise, thawing of the frozen zone may occur. A simple alternative to insulating the utilities, themselves, is to insulate the adjacent freeze pipes where they are near sensitive utilities.

24. One of the easiest, most effective, and economical methods of insulation is to excavate all of the potentially affected water, steam and sewage utilities, throughout the area where they will intersect the frozen zone, and spray them in-situ with foam plastic. If an open excavation will be part of the project, many of the utilities will be re-routed during construction and insulation for the remainder can be completed simultaneously.

25. In addition to insulating utilities, it may be necessary to insulate the exposed surfaces of the excavation from the sun to minimize surface sloughing and reduce the load on the refrigeration plant. In general, this will not be necessary in shafts and tunnels, but will be a concern with open surface excavations exposed to the sun. A single layer of reflective plastic is frequently sufficient. Where greater protection is required, foam plastic applied over wire mesh is probably one of the most effective and least expensive of the available insulating methods. Furthermore, this type of insulation may be acceptable as a water-stop concrete can be single-formed directly against it.

26. Even without insulation, concrete can be poured directly against frozen earth. The principal concern being that the concrete not freeze before it has attained its initial set. In many cases, particularly with structural sections over 20 centimeters thick, the heat of hydration is sufficient to

offset freezing during the initial critical period. When the ordinary heat of hydration may be inadequate, high early strength cement and/or additives such as calcium chloride should be sufficient to eliminate the problem.

27. When the freeze elements will intersect the ground surface three dimensional heat flow as well as seasonal ground temperature effects will affect the shape of the frozen zone. In fall or early winter, the surface soils (to a depth of about 3 m) will be appreciably warmer than deeper strata. The combined seasonal and three dimensional effects may result in a conical shape of the frozen zone near the ground surface and difficulty may be experienced in obtaining closure between adjacent freeze elements at shallow depths. Additional shallow refrigeration or surface insulation around the freeze pipes will materially reduce this effect. During the later winter months, this will not be a problem.

## Alternative Construction Freezing Methods

28. The refrigeration plant and refrigerant or coolant distribution system represent a major portion of the direct cost of a freezing project. Furthermore, the direct cost as well as the time required to complete adequate freezing are all dependent to some extent on the type of freezing approach used. There are about five basic alternative freezing approaches available.

29. All of these approaches consist of a primary source of refrigeration and a secondary distribution system to circulate the coolant or refrigerant in the ground.

### Primary plant and pumped loop secondary coolant (brine system)

30. This freezing approach is the one used on most projects today. It was developed by F. H. Poetsch in Germany about 100 years ago. It is simple, straight forward and well understood. For projects requiring only a single installation of all elements and a prolonged period of maintenance freezing after completion of the initial frozen earth barrier, this system is still very attractive.

a. The primary source of refrigeration for this approach is a conventional one or two-stage ammonia or freon refrigeration plant (frequently two stage for temperatures below -25 C). These plants are commonly available in wide range of capacities, and can be rented completely assembled in portable modules for

field use. These plants use either diesel or electric prime movers, they have a high thermal efficiency and their technology is well understood. The condensers may be air or water cooled, the latter requiring a cooling tower. New plant costs would typically be of the order of 1500 dollars per ton of refrigeration capacity (TR) and rental might be about 90 to 180 dollars per TR per month with some minimum total amount.* These plants may be available new for a specific project in two to three months. Though plants could theoretically be built to any capacity, 500 TR probably represents about the largest unit that could be assembled in a convenient and practical mobile configuration. Multiple smaller plants can be, and frequently are, ganged together to obtain high capacity with better overall efficiency as well as a measure of redundancy in case of malfunction.

b. Distribution system - The distribution system for this freezing approach typically consists of an insulated coolant supply manifold, a number of parallel connected freezing elements in the ground with inner supply and outer return lines, and an insulated return manifold. This system is simple but cumbersome and thermally inefficient. Heat transfer occurs between the coolant and the freeze element by convection, no phase change occurs. Because of this, large quantities of coolant must be circulated to cause freezing and an inherent thermal gradient exists in the system during the active freezing periods. Large flows require large volumes of coolants and large fixed plumbing systems. Furthermore, the circulating pumps put energy into the system in direct opposition to the primary refrigeration plant. Though it is possible to reduce the refrigeration capacity or individual freezing elements, it is not possible to increase it without increasing the capacity of the entire system. The flexibility to independently increase the capacity of individual elements is desirable to facilitate control of unique localized conditions such as unexpected water flows.

Coolant - The secondary coolant distribution system limits the attractiveness and usefulness of this basic freezing approach. Despite drawbacks and inefficiencies, energy costs for this system are low, probably of the order of 15,000 to 20,000 effective Kilo-calories per dollar (based on 0.06 dollars per kilo-watt hour).

Though many different types of coolant have been used with this system (diesel oil, propane, glycol-water mixtures, and brines), the most common is calcium chloride brine. The calcium chloride is added to water in sufficient quantities to depress its freezing point below that attainable by the refrigeration plant during on-line operation. These brine solutions have a high specific heat; however, they are also dense, relatively viscous and corrosive. Other fluids may have more attractive properties under some conditions, but flammable or toxic coolants must be avoided for obvious reasons.

---

* Based on 1987 costs.

c. Freezing elements - On many projects, the pipes used for freezing elements represent a substantial cost. For circulating coolant refrigeration systems, ordinary steel pipe is adequate. For lower temperatures (less than about -40 C) non-ferrous metals or alloys, such as aluminum or nickel steel, are desirable to eliminate problems related to brittle fracture. The pipe wall thickness will normally depend on either internal hydraulic pressure, external confining pressure, or stresses imposed during installation. Plastic pipe should be avoided, except for inner tubing or surface piping, because of its poor thermal properties. All connections between pipes must be tight, and the system should be pressure tested for leaks prior to starting freezing. A subsurface leak in a circulating coolant freezing system, particularly one containing brine, may make it very difficult o obtain an adequate frozen zone. Leaks in expendable refrigerant systems are undesirable, but not critical as the refrigerant will vaporize at low temperature and dissipate.

Primary plant with in-situ evaporator

31. This approach employs a primary refrigeration plant such as that previously described. However, recognizing the inefficiencies inherent in a large distribution system, the secondary coolant is eliminated and a much smaller volume of high pressure refrigerant is circulated directly from the condenser to the freezing elements where evaporation is allowed to occur. The resulting vapor is then returned to the compressor. This approach has merit and might be advantageous for some applications, however, it has not been used in recent years. For many of the commonly used refrigerants the evaporator must operate at less than atmospheric pressure (vacuum). Leaks are difficult to detect and may critically affects its operation. Of the available refrigerants which operate with positive evaporator pressures carbon dioxide has been used. Several projects have been successfully completed using carbon dioxide in this manner; however, a number of difficulties were encountered in the physical control of the system. Most of these difficulties apparently involved transmission of high pressure fluids, low temperature embrittlement of metals, and plugging of orifices due to phase change and entrapped moisture.

32. The application of modern refrigeration technology has resulted in the development of solutions for all of these problems, but they have not yet been field tested.

Reliquefaction plant with in-situ second stage

33. This freezing approach employs the best features of both of the preceding approaches. It uses a primary refrigeration plant thermally coupled to a distribution system containing either the same refrigerant, or one that is thermodynamically compatible.

a. Plant - Though any primary refrigeration plant could theoretically be adapted for this purpose, only a few alternatives would be practical. Some of the most likely combinations of primary plant and secondary refrigerant are:

| Primary Plant | Secondary Refrigerant | Typical Operating Ranges: Temperature deg C | Typical Operating Ranges: Kilograms per square centimeter |
|---|---|---|---|
| Nitrogen | Nitrogen | -170 to -190 | 1.7 - 10.6 |
| Carbon Dioxide | Carbon Dioxide | - 40 to -55 | 5.6 - 10.6 |
| Ammonia | Carbon Dioxide | - 15 to -40 | 10.6 - 21.1 |

The main difference in the various reliquefaction systems is the relative horsepower requirements of the different plants. Furthermore, though carbon dioxide plants are presently available in capacities and costs somewhat comparable to those previously given for ammonia plants, nitrogen plants are not commonly available. These plants are presently in use only within the liquefied gas industry and would have to be specially made for field applications.

b. Distribution system - The principal advantage of a reliquefaction freezing approach stems from the improved distribution system. Heat transfer in the freezing elements is by boiling phase change. This results in energy capacities per liter of fluid circulated of the order of 50 times greater than those obtained by circulating secondary coolants. Because of this, much smaller volumes of fluid need to be circulated, and small diameter pressure hoses with quick-connect couplings can be used to replace large diameter pipe plumbing. Though somewhat more exotic tubing materials are required to handle the low temperatures, these are available at competitive cost and they are essentially 100 percent salvageable for reuse without modification. The potential savings in assembly and disassembly labor for quick connect hoses, as compared to steel pipe, are obvious.

The temperature range of the reliquefaction system is dependent on the plant, secondary refrigerant, and circulating pump used. However, each freezing element is an independent evaporator connected in parallel, and therefore can be adjusted to operate

anywhere within this range. This flexibility enables one or more freezing elements to be operated at lower temperatures than the remainder of the system; thus allowing the operator complete flexibility to increase or decrease the refrigeration capacity of an element to handle unique localized or unexpected conditions.

To date reliquefaction systems have been proven, but they have not been used in the field. It is likely that the reliquefaction refrigeration approach will eventually replace the primary refrigeration and circulating secondary coolant approach for ground freezing construction in the future.

Expendable refrigerants

34. For single projects of short duration (a few hours to a week or two), or for projects where the cost of delay is high, expendable refrigerants are very attractive. No refrigeration plant is required, but the cost of energy is high, probably of the order of 1000 to 2000 K cal per dollar, even when purchased in large quantities. Furthermore, outside of the main urban areas, the refrigerants may not be available in quantities sufficient to conduct the work.

a. Liquid nitrogen - Uniform boiling of liquid nitrogen throughout a series of freezing elements represents the fastest, thermally most efficient means of ground freezing presently possible. However, it is usually not possible to attain this objective with an open system.

The principal difficulties encountered with the use of expendable refrigerants involve control of the system. The relatively unconfined venting of liquid nitrogen in a series of vertical or horizontal freezing elements frequently results in a waste of refrigerant and a very irregular frozen zone. the irregularity occurs because the heat transfer coefficient varies by orders of magnitude depending on the quality of the liquid/vapor mixture and its velocity. A supply and exhaust manifold with appropriate valves at each end of a series of freezing elements permits reverse flow which tends to even out the irregular freezing characteristics.

b. Carbon dioxide - Sublimating carbon dioxide is thermally less efficient than liquid nitrogen and harder to control. Solid dry ice, even in pelletized form, is bulky and difficult to handle. However, dry ice used with a mixing tank and a circulating secondary coolant is effective.

Liquid carbon dioxide may be employed with a temperature controlled sewo-system to chill a circulating coolant. This type of liquid carbon dioxide control equipment can readily be mounted on a conventional refrigeration plant employing circulating coolant. The system is thermally effective, but problems frequently develop because of the high solubility of liquid carbon dioxide.

When using expendable refrigerants it is necessary to provide positive exhaust for the vapor. Neither carbon dioxide nor nitrogen are flammable or toxic. However, they are heavier than air and in very large quantities can cause suffocation; therefore, in addition to adequate ventilation, emergency oxygen should be available for underground or confined work.

## Critical Construction Cost Factors

35. The following remarks apply primarily to the use of a circulating coolant freezing system. The use of reliquefaction equipment or expendable refrigerants is too unique at this time to justify generalized comments on costing.

### Mobilization

36. The location of the project relative to the location of the freezing plants, drill rigs, materials and available personnel will have an important influence on the cost of the work. Hauling the equipment, all necessary loading and unloading, labor, plus materials and initial positioning of the equipment is considered part of mobilization. Mobilization is normally priced as a lump sum.

a. Site power and water facilities - If adequate electric power is not available at the site, then mobilization will include its installation or provision of comparable generating capacity. The same is true of water service. Frequently, these services will be needed for subsequent construction anyway, and all, or a portion of, the cost of providing them can be carried against the total project, rather than just the construction freezing aspect of it.

b. Site accessibility - Where the site is difficult or inaccessible to trucks, mobilization may include the building or up-grading of roads, provisions of a temporary working camp, etc. Again, under these circumstances, such costs would be carried against the total project, not just the construction freezing portion of it.

c. Timely notice - Timely notice prior to mobilization is important to facilitate scheduling of equipment, personnel, and the development of detailed economical designs. Late, or emergency, notice will cost money because of the need of quickly conceived probably over-conservative designs.

### Drilling and casing of freeze holes

37. The cost of drilling and casing freeze holes mainly depends on the site surface conditions, the soil and rock conditions, the required depth of the holes, and the acceptable deviation of the holes. The cost of drilling is

normally based on the total linear footage of subsurface refrigeration pipe to be installed. It is usually included in the lump sum price for installation and prefreezing of the frozen barrier, but may on occasion be included separately as a linear footage unit price.

a. Site surface conditions - The ideal situation is an open level surface with no above or below ground obstacles. Side slopes, uneven ground, existing utilities which have to be taken care of, and limitation of working space due to traffic requirements will reduce the drilling production, sometimes considerably, thus increase the cost.

b. Ground conditions - Homogeneous soil - particularly silts and sands - allow quick inexpensive drilling. Intermediate layers of harder material will, or course, reduce production but not result in excessive extra cost. However, large cobbles, boulders, or other obstructions will really slow down the drilling. The principal reason is that their presence requires the use of little or no down pressure on the drill in order to avoid unacceptable deviation of the holes. It may also be necessary to use modified procedures or special equipment to complete the holes. Drilling costs under these conditions would routinely be two to three times higher than those in soft uniform soils. If cased rotary diamond drilling is required the price would be higher yet.

c. Depth of holes - The average drilling cost per linear foot generally decreases with increasing depth because the cost for mobilization, rig moving time and setting up for each hole is a decreased percentage of the total cost. This holds true as long as the maximum depth does not require heavier and therefore more expensive drilling equipment in the first place.

d. Hole deviation - Tough specification for the alignment of holes costs money! On the other hand, accuracy of hole alignment is of great importance for a successful freezing operation. With close hole spacing, drilling costs go up and larger deviations are tolerable. At larger spacing drilling costs go down, but deviation becomes critical, as the frozen barrier might not close or might be structurally unsatisfactory in the affected area. Because of this, it is necessary for each project to determine the optimum relation between the minimum number of pipes (maximum spacing) and the maximum probable deviations of the pipes which will still allow freezing to be completed on time at the minimum cost, and with the required safety.

Installation of refrigeration
plant and coolant distribution system

38. The important factors which influence the cost of on-site plant installation for a specific freezing job are the site surface conditions, the magnitude and duration of the project, the total volume of ground to be frozen and its properties, and the overall time schedule for the job. The cost of

the plant installation for a given site and allowable prefreezing period are normally related to the total linear footage of subsurface freeze pipe. The cost of the surface distribution system is normally related to the surface length (perimeter) of the frozen barrier. Both costs are usually included in the lump sum price for installation and prefreezing of the frozen barrier.

a. Site surface conditions - The nature of the site surface conditions and the proximity of adjacent buildings, streets, utilities, etc., has more or less the same overall effect on onsite plant installation as on drilling. Also, corollary to this are site restrictions on noise, air or water pollution or vibration. Under very confined conditions the continuously running plants may require sound deadening enclosures. As the plants are normally electric powered, this is rarely a concern.

b. Magnitude and duration of project - The magnitude and duration of a freezing job influences the on-site installation cost of the surface piping (distribution) system for supply and of the brine between the plant and individual freeze elements. Larger projects of long duration will require essentially permanent well-insulated and protected surface piping. In contrast, a small job of short duration may be conducted with uninsulated quick connect surface piping.

c. Volume of frozen zone and available time - The total volume and the water content of the ground to be frozen are important factors which determine the plant capacity to be installed for a specific job. Equally important is the overall time schedule for the freezing operation. The larger the volume of ground to be frozen within a given period of time - the more refrigeration capacity has to be installed. More capacity means higher installation cost.

In general, the refrigeration load at the start of the prefreezing period will be two or three times as high as the load during the period of maintenance freezing. Because of this, it may frequently be possible to stage the work so as to limit the maximum load to that of the installed plant capacity at any one time. This applies in particular to sequential projects such as multiple shafts or tunnels which are constructed in a series of sections.

Initial prefreezing period

39. The cost of initial freezing - the so-called prefreezing time necessary to complete the frozen barrier to the required thickness depends on the ground conditions, the number and capacity of plants operating during this period, the number and capability of personnel on site, and the cost of energy. The cost of prefreezing for a given site and allowable prefreezing period is normally related to the total linear footage of subsurface freeze

pipe installed. The price for prefreezing is usually included in the lump sum price for installation and prefreezing of the frozen barrier.

40. The factor which influences the prefreezing cost the most is usually the water content of the ground. The more water which as to be frozen the more energy which must be removed and the longer the prefreezing period required for any given plant capacity. The only alternative other than using expendable refrigerants being to increase the capacity to meet a specified time. In any case, increasing water content means increasing cost.

41. Basically freezing is a labor saving construction method. Nevertheless, the cost of personnel, primarily operators for the refrigeration plants, is an item which has to be carefully evaluated when estimating a freezing job. As far as technical necessity is concerned, no operator is required. This is a result of the fact that modern refrigeration equipment is completely automated and requires little attention. However, in some areas the unions require the contractor to employ personnel to monitor plant operation which, or course, results in higher costs - sometimes much higher. As a rule, the union jurisdiction for freezing in a given location will be the same as those required for installation and operation of an around-the-clock dewatering system.

42. Once drilling and installation of the plant is complete, the only personnel needed on a freezing job are the plant operation(s) and periodic supervisory and maintenance staff.

43. Since freezing requires energy, the local price for obtaining or generating electricity influences the overall cost of a freezing operation considerably.

Long term maintenance freezing period

44. Maintenance freezing commences as soon as the frozen barrier is completed sufficiently to allow subsequent construction, such as excavation, to start. The cost of maintenance freezing is affected by the location and type of excavation, and more importantly by the required duration of the maintenance period. The price for maintenance freezing is normally based on a unit price per week.

a. Location and type of excavation - A large open excavation in a hot, dry climate may cause an increase in refrigeration load on the plants after excavation and the face of the excavation must be insulated to minimize this effect. In contrast, the refrigeration load after excavation of a shaft or tunnel, especially

in a cool moist climate, may be lower than before excavation and insulation would not be required. As still air is an insulator relative to the earth itself, an open surface excavation in any climate does not represent an impossible refrigeration load. In fact, in cool climates a single sheet of light-colored plastic hung over the face of such an excavation is frequently all that is required to minimize the long term maintenance refrigeration costs.

b. Duration of maintenance period - The cost of maintaining a freeze wall is directly related to time. Extension of maintenance time will increase maintenance cost proportionally. Therefore, it is of the greatest importance to plan the entire project in a way that minimizes maintenance time. Doing so, can save a great deal of money. Initial installation of a frozen barrier is frequently less expensive than other alternatives, but if the required maintenance period is long, the combined cost of installation and maintenance becomes excessive. Even on projects where freezing is potentially much less expensive, if the subsequent construction operations which must be completed prior to stopping refrigeration are not planned and scheduled together efficiently, no savings may be realized. Changing an excavation procedure, steel erection, concrete or backfill schedule to "get out of the ground" faster may cost some money, but when combined with the reduction in maintenance freezing time, the net result may be a handsome savings.

45. Ground freezing is a proven construction technology which has been in use successfully on a wide variety of projects, for over a century. As with any geotechnical construction technique, its suitability and cost-effectiveness for a project will be directly related to the specific site and job conditions which we have discussed in this Seminar. Properly designed and constructed frozen earth structures are a powerful tool for the foundation construction industry.

## BIOGRAPHICAL INFORMATION ON SPEAKERS AND AUTHORS

1. Victorio D. Altan - Mr. Altan is the Technical Director of Suelotechnica, LTDA, Buenos Aires, Argentina. He is a graduate of Buenos Aires University, Argentina. He has worked on numerous jet grouting projects including the construction of a deep cutoff wall at the Paleocauce-Piedra del Aquia Dam in Argentina.

2. James M. Duncan - Professor Duncan is the W. Thomas Rice Professor of Civil Engineering at Virginia Polytechnic Institute and State University in Blacksburg, Virginia. He is a graduate of the Georgia Institute of Technology and the University of California, Berkeley. He is a member of the National Academy of Engineering and numerous professional organizations. He received the Collingwood Prize, Walter L. Huber Research Prize, and Thomas A. Middlebrooks Award from the American Society of Civil Engineers. He has served as a consultant for many organizations including the US Army Corps of Engineers, Bureau of Reclamation, United Nations, and World Bank. He has authored more than 140 professional papers and research reports on geotechnical engineering subjects.

3. Giorgio Guatteri - Dr. Guatteri is the President of Novatecna Consolidacoes E Construcoes LTDA, Sao Paulo, Brazil. He is a graduate of the University of Modena, Italy. He is the founder of Novatecna, which specializes in soil improvement by means of jet grouting. Over 150,000 metres of jet grouted columns have been installed in Brazil, Argentina, and the United States.

4. Reuben H. Karol - Professor Karol is a Professor of Civil Engineering at Rutgers University in New Brunswick, New Jersey. He is a graduate of Rutgers University and is a member of numerous professional organizations. He has served as a consultant on grouting problems for many organizations including the US Army Corps of Engineers, Bureau of Reclamation, Environmental Protection Agency, Harza Engineering Company, and Dames and Moore. He has authored more than 50 professional papers and research reports and 4 books on geotechnical engineering subjects including the textbook on Chemical Grouting.

5. Joseph L. Kauschinger - Professor Kauschinger is Assistant Professor of Civil Engineering at Tufts University. He is a graduate of Manhattan College, Rutgers University, and the University of Texas. He has worked for ICOS Corporation of America, New Jersey Department of Environmental Protection, and

Meuser Rutledge Consulting Engineers. He is a member of numerous professional organizations and has authored more than 10 professional papers and research reports on geotechnical engineering.

6. Paolo Mosiici - Mr. Mosiici is the Technical Director of Novatecna Consolidacoes E Construcoes LTDA, Sao Paulo, Brazil. He is a graduate of the University of Pisa, Italy. He has participated in the installation of over 150,000 meters of jet grouted columns in Brazil, Argentina, and the United States.

7. William R. Morrison - Mr. Morrison has worked for over 25 years with the Bureau of Reclamation specializing in seepage and erosion control materials. He is a graduate of the University of Colorado. He is a member of numerous professional organizations and has authored more than 15 professional papers and research reports on seepage and erosion control materials.

8. Jonathan J. Parkinson - Mr. Parkinson is Vice-President of Soletanche and Rodio, Inc., in Paris, France. He is a graduate of Cambridge University and Imperial College. He has worked for Binnie and Partners in London and Soletanche and Rodio, Inc. (formerly Recosol), in the United States and France.

9. Walter C. Sherman, Jr. - Mr. Sherman is Adjunct Professor of Civil Engineering at Tulane University in New Orleans, Louisiana. He is a graduate of Purdue University, Harvard University, and Imperial College. He was employed with the US Army Engineer Waterways Experiment Station for 33 years where he worked on projects involving earth dams, hydraulic structures, stability of nuclear excavated slopes, dredged material disposal, expansive clays, and pile foundations. He has served as a consultant for many organizations and has authored more than 40 professional papers and research reports on geotechnical engineering subjects.

10. John A. Shuster - Mr. Shuster is the President of Geocentric Engineering in Lorton, Virginia. He is a graduate of the University of Alaska and Stanford University. He has over 20 years of experience in heavy construction and foundation engineering of which 13 years is in ground freezing. He has published numerous papers on construction ground freezing and engineering with frozen earth.

11. George J. Tamaro - Mr. Tamaro is a partner in Mueser Rutledge Consulting Engineers in New York. He is a graduate of Manhattan College, Lehigh University, and Columbia University. He has worked in the engineering design

and construction field for a variety of agencies and international firms including Pier Luigi Nervi Architects, Rome, Italy; The Port Authority of New York and New Jersey; ICOS Corporation of America and ICOS Orient; and ICANDA Corporation. He holds United States and Canadian patents in slurry wall construction methods and equipment.