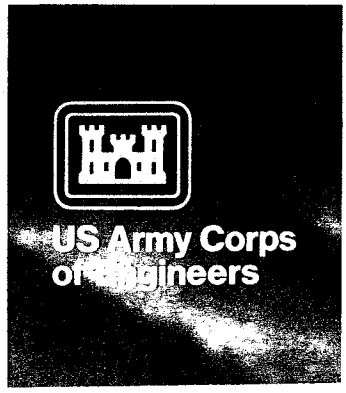

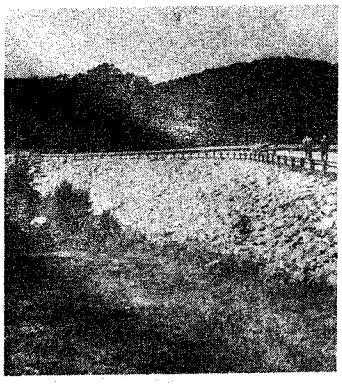

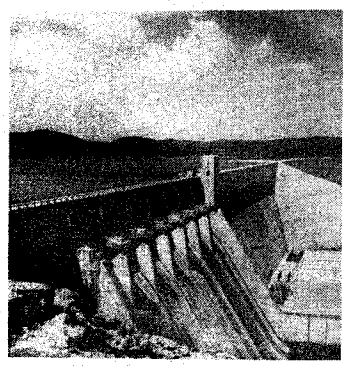

REPAIR, EVALUATION, MAINTENANCE, AND REHABILITATION RESEARCH PROGRAM

TECHNICAL REPORT REMR-GT-19

DAMSEAL–AN EXPERT SYSTEM FOR EVALUATING DAM SEEPAGE

by

Roger L. King

Mississippi State University
Mississippi State, Mississippi 39762

and

Wendell O. Miller

Geotechnical Laboratory

DEPARTMENT OF THE ARMY
Waterways Experiment Station, Corps of Engineers
3909 Halls Ferry Road, Vicksburg, Mississippi 39180-6199

November 1992

Final Report

Distribution limited to US Government agencies only; computer program documentation; November 1992. Other requests for this document must be referred to US Army Engineer Waterways Experiment Station, 3909 Halls Ferry Road, Vicksburg, Mississippi 39180–6199.

Prepared for DEPARTMENT OF THE ARMY
US Army Corps of Engineers
Washington, DC 20314-1000

Under Contract No. DACW39-89-K-0010

The following two letters used as part of the number designating technical reports of research published under the Repair, Evaluation, Maintenance, and Rehabilitation (REMR) Research Program identify the problem area under which the report was prepared:

	Problem Area		Problem Area
CS	Concrete and Steel Structures	EM	Electrical and Mechanical
GT	Geotechnical	EI	Environmental Impacts
HY	Hydraulics	OM	Operations Management
CO	Coastal		

Destroy this report when no longer needed. Do not return it to the originator.

The findings in this report are not to be construed as an official Department of the Army position unless so designated by other other authorized documents.

This program is furnished by the Government and is accepted and used by the recipient with the express understanding that the United States Government makes no warranties, expressed or implied, concerning the accuracy, completeness, reliability, usability, or suitability for any particular purpose of the information and data contained in this program or furnished in connection therewith, and the United States shall be under no liability whatsoever to any person by reason of any use made thereof. The program belongs to the Government. Therefore, the recipient further agrees not to assert any proprietary rights therein or to represent this program to anyone as other than a Government program.

The contents of this report are not to be used for advertising, publication, or promotional purposes. Citation of trade names does not constitute an official endorsement or approval of the use of such commercial products.

COVER PHOTOS:

TOP — Dike, Beaver Dam, Arkansas.

BOTTOM — Beaver Dam, Arkansas.

REPORT DOCUMENTATION PAGE

Form Approved
OMB No. 0704-0188

Public reporting burden for this collection of information is estimated to average 1 hour per response, including the time for reviewing instructions, searching existing data sources, gathering and maintaining the data needed, and completing and reviewing the collection of information. Send comments regarding this burden estimate or any other aspect of this collection of information, including suggestions for reducing this burden, to Washington Headquarters Services, Directorate for Information Operations and Reports, 1215 Jefferson Davis Highway, Suite 1204, Arlington, VA 22202-4302, and to the Office of Management and Budget, Paperwork Reduction Project (0704-0188), Washington, DC 20503.

1. AGENCY USE ONLY *(Leave blank)*

2. REPORT DATE
November 1992

3. REPORT TYPE AND DATES COVERED
Final report

4. TITLE AND SUBTITLE
DAMSEAL - An Expert System for Evaluating Dam Seepage

5. FUNDING NUMBERS
Contract No.
DACW39-89-K-0010

6. AUTHOR(S)
Roger L. King
Wendell O. Miller

7. PERFORMING ORGANIZATION NAME(S) AND ADDRESS(ES)
Mississippi State University, Drawer EE, Mississippi State, MS 39762, USAEWES, Geotechnical Laboratory, 3909 Halls Ferry Road, Vicksburg, MS 39180-6199

8. PERFORMING ORGANIZATION REPORT NUMBER
Technical Report
REMR-GT-19

9. SPONSORING/MONITORING AGENCY NAME(S) AND ADDRESS(ES)
US Army Corps of Engineers
Washington, DC 20314-1000

10. SPONSORING/MONITORING AGENCY REPORT NUMBER

11. SUPPLEMENTARY NOTES
See reverse.

12a. DISTRIBUTION/AVAILABILITY STATEMENT
See reverse.

12b. DISTRIBUTION CODE

13. ABSTRACT *(Maximum 200 words)*

Artificial Intelligence (AI) systems have been proved to offer important user benefits. One of the major benefits is to provide a mechanism to increase complex problem-solving and decision-making effectiveness and capability. This benefit is achieved through the application of expert systems.

This report documents an expert system containing the Corps of Engineers best diagnostic capabilities for seepage analysis and control at dams. This capability was achieved through exhaustive interviews and workshops with those geotechnical engineers/geologists identified by the Office, Chief of Engineers as being expert in remedial seepage analysis. In a real sense, DAMSEAL is the corporate memory of the Corps for seepage as many of the geologists/engineers interviewed have retired.

DAMSEAL is written in the Level 5 Expert System Shell and gives access to

(Continued)

14. SUBJECT TERMS
See reverse.

15. NUMBER OF PAGES
284

16. PRICE CODE

17. SECURITY CLASSIFICATION OF REPORT
UNCLASSIFIED

18. SECURITY CLASSIFICATION OF THIS PAGE
UNCLASSIFIED

19. SECURITY CLASSIFICATION OF ABSTRACT

20. LIMITATION OF ABSTRACT

11. Continued.

A report of the Geotechnical problem area of the Repair, Evaluation, Maintenance, and Rehabilitation (REMR) Research Program. This report is available from the National Technical Information Service, 5285 Port Royal Road, Springfield, VA 22161. Computer diskettes of the expert system are available from the Waterways Experiment Station, 3909 Halls Ferry Road, Vicksburg, MS.

12a. Continued.

Distribution limited to US Government agencies only; computer program documentation; November 1992. Other requests for this document must be referred to US Army Engineer Waterways Experiment Station, 3909 Halls Ferry Road, Vicksburg, MS 39180-6199.

13. Continued.

the existing Corps of Engineers DAMS database using dBase III. Another database, Seepage.dbf contains information on dams that have experienced seepage problems. DAMSEAL is a self-contained system with no other software requirements. Hardware requirements are an IBM-compatible PC, 640 RAM, and a hard disk with a 2 MB of available memory.

14. Continued.

Abutments
Artificial intelligence
Dams
Data base
Expert systems
Foundations
Remedial actions
Seepage

PREFACE

The work described in this report was authorized by Headquarters, US Army Corps of Engineers (HQ USACE), as part of the Rock Problem Area of the Repair, Evaluation, Maintenance, and Rehabilitation (REMR) Research Program. The work was performed under Contract No. DACW39-89K-0010, Selection of Remedial Control Measures, for which Mr. Wendell O. Miller was Principal Investigator. Mr. Lewis A. Gustafson (CECW-EG) was the REMR Technical Monitor for this work.

Mr. Jesse A. Pfeiffer, Jr. (CERD-C) was the REMR Coordinator at the Directorate of Research and Development, HQ, USACE; Mr. James E. Crews (CECW-O) and Dr. Tony C. Liu (CECW-EG) served as the REMR Overview Committee; Mr. William F. McCleese (CEWES-SC-A), US Army Engineer Waterways Experiment Station (WES), was the REMR Program Manager; Mr. Jerry S. Huie was the Problem Area Leader.

The work was performed at both the Mississippi State University (MSU) and WES. The work performed at MSU was directed by Dr. Roger L. King under Contract No. DACW39-89K-0010. The work performed at WES was directed by Mr. Wendell O. Miller, under the direct supervision of Mr. Jerry S. Huie, Chief, Rock Mechanics Branch, and under the general supervision of Dr. Don C. Banks, Chief, Soil and Rock Mechanics Division (S&RMD), and Dr. William F. Marcuson III, Director, Geotechnical Laboratory (GL). Dr. Paul F. Hadala, Assistant Chief, GL, was Senior Technical Reviewer.

Members of the Advisory Panel were Mr. Ben Kelly, CECW-EG (Retired); Mr. Loyd Underwood, CECW-EG (Retired); Dr. James Erwin, CESAD-EN-F (Retired); Mr. Robert James, CESWD-ED-G (Retired); and Dr. Thomas Wolff, Consultant.

At the time of publication of this report, Director of WES was Dr. Robert W. Whalin. Commander was COL Leonard G. Hassell, EN.

CONTENTS

	Page
PREFACE	1
CONVERSION FACTORS, NON-SI TO SI (METRIC) UNITS OF MEASUREMENT	4
PART I: INTRODUCTION	
Background	5
Objective	5
Approach	6
PART II: SYSTEM DESIGN	
General Considerations	7
System Architecture	7
DAMSEAL Knowledge Base	10
DU Knowledge Base	12
DC Knowledge Base	12
DB Knowledge Base	13
DDS Knowledge Base	15
DFR Knowledge Base	16
DH Knowledge Base	18
DMM Knowledge Base	22
DPR Knowledge Base	26
DTS Knowledge Base	28
DWS Knowledge Base	30
Databases	35
PART III: SYSTEM OPERATION	
General Considerations	36
Delivery	36
System Installation and Execution	37
Operation of DAMSEAL	37
PART IV: CONCLUSIONS AND RECOMMENDATIONS	45
APPENDIX A: DAMSEAL Knowledge Base Printout	A1
APPENDIX B: DB Knowledge Base Printout	B1
APPENDIX C: DC Knowledge Base Printout	C1
APPENDIX D: DDS Knowledge Base Printout	D1
APPENDIX E: DFR Knowledge Base Printout	E1
APPENDIX F: DH Knowledge Base Printout	F1
APPENDIX G: DMM Knowledge Base Printout	G1
APPENDIX H: DPR Knowledge Base Printout	H1
APPENDIX I: DTS Knowledge Base Printout	I1
APPENDIX J: DU Knowledge Base Printout	J1
APPENDIX K: DWS Knowledge Base Printout	K1
APPENDIX L: Figures used in DAMSEAL	L1

LIST OF TABLES

No.		Page
1	Purpose and Size of Files Used in DAMSEAL	9
2	Divisions and Districts Available Through DAMSEAL	11

LIST OF FIGURES

No.		Page
1	Block diagram of DAMSEAL expert system	8
2	Information flow diagram for knowledge bases	10
3	Form to be used by user to update seepage database	13

CONVERSION FACTORS, NON-SI TO SI (METRIC) UNITS OF MEASUREMENT

Non-SI units of measurement used in this report can be converted to SI (metric) units as follows:

Multiply	By	To Obtain
acre-feet	1,233.489	cubic metres
cubic feet	0.02831685	cubic metres
feet	0.3048	metres
miles (US statute)	1.609347	kilometres

DAMSEAL-AN EXPERT SYSTEM FOR EVALUATING DAM SEEPAGE

PART I: INTRODUCTION

Background

1. Under a previous contract*, the US Army Engineer Waterways Experiment Station (WES) developed a prototype expert system for diagnosing seepage problems associated with dams. Known as EXSEL, an acronym for EXpert System for SEepage and Leakage, this system proved the feasibility of the concept. Although the feasibility was proved, there were limitations in the system that prevented its usefulness. Chief among its limitations were its user interface, failure to make an expert recommendation, and inability to access a database of Corps of Engineers (CoE) experience with seepage problems from dams across the United States. These limitations were not addressed in the original contract because of funding constraints.

Objectives

2. The objectives of this research were twofold. First, EXSEL was to be converted from Arity-prolog into the Level5 Expert System Shell and given access to the existing CoE dams databases. This change in delivery system corrected the user interface problem and provided a convenient procedure for accessing the existing seepage databases. Second, a team of Corps experts developed specific recommendations for solutions for the typical types of seepage problems encountered on Corps projects.

3. The payoff for this research is an expert system containing the CoE's best diagnostic capabilities for seepage analysis and control at dams. The ultimate goal of this expert system was to make available to field personnel the years of experience and knowledge obtained by various Corps'

---

* Asgian, M. I., Arulmoli, K., and Sanjeevan, K. August 1987. "Expert System for Diagnosing Seepage Problems Associated with Dams."

experts who have retired or will retire shortly. Reference is also made to official publications*.

4. It should be noted here that the computer program developed by this effort is not intended to replace consultation with senior engineers or geologists regarding specific problems. Rather, it is intended to provide young field personnel with a means for determining the immediacy of seepage problems and a means for comparing efficiency of design based upon past Corps' experience.

Approach

5. Artificial Intelligence (AI) systems have been proved to offer important user benefits. One of the major benefits is to provide a mechanism to increase complex problem-solving and decision-making effectiveness and capability. This benefit is achieved through the application of expert systems.

6. Very simply, an expert system is a computer system that functions at, or near, the level of a human expert. An expert system is designed to use an expert's knowledge and experience to solve narrowly focused, complex problems. These systems are based on AI research in the areas of knowledge representation, inference methods, explanation, and natural language interpretation.

7. This report will detail this study. Part II of the report will discuss the design of the new expert system. Part III will illustrate its operation, and conclusions and recommendations are given in Part IV.

---

* EM 110-2-1901. 30 September 1986. "Engineering and Design: Seepage Analysis and Control of Dams."

PART II: SYSTEM DESIGN

General Considerations

8. To provide an identity for the new expert system, the name DAMSEAL, an acronym for DAM SEepage And Leakage, was given. This will help users identify the use of the expert system with the domain of dams.

9. Initially, meetings were held with the Advisory Panel to discuss the general approach to be used in solving a user's problem and to decide what information would be made available to DAMSEAL. Figure 1 illustrates this general approach in the form of a block diagram.

10. A dam is identified by first selecting the appropriate division and/or district. Selection of a particular dam would be made from a list of dams displayed on the screen. Using this approach eliminates problems associated with misspelled dam names, abbreviations, etc. After the dam is identified and the database information retrieved, it is interpreted (i.e. changed from the codes used in the database into something intelligible) and displayed to the user. Although the project originally was going to use only a dBase III file of dams that had experienced seepage, it was decided to also include access to a CoE Dams dBase II file of all dams under the oversight of the CoE.

11. Following this, the consultation would then progress to the identification of the specific seepage or leakage problem occurring at the dam. DAMSEAL would then diagnose the problem and recommend an appropriate action.

System Architecture

12. DAMSEAL is composed of a total of eleven different knowledge bases. Eight of the eleven knowledge bases are problem-solving knowledge bases and are based on primary seepage manifestations observed by the user. Information on all eleven of the knowledge bases is contained in Table 1. The facts field shows how many new independent facts may be introduced during the execution of this knowledge base. DAMSEAL has been designed to share 147 independent facts among the knowledge bases. The rules field is how many production rules are used in a specific knowledge base and the lines field furnishes the number of

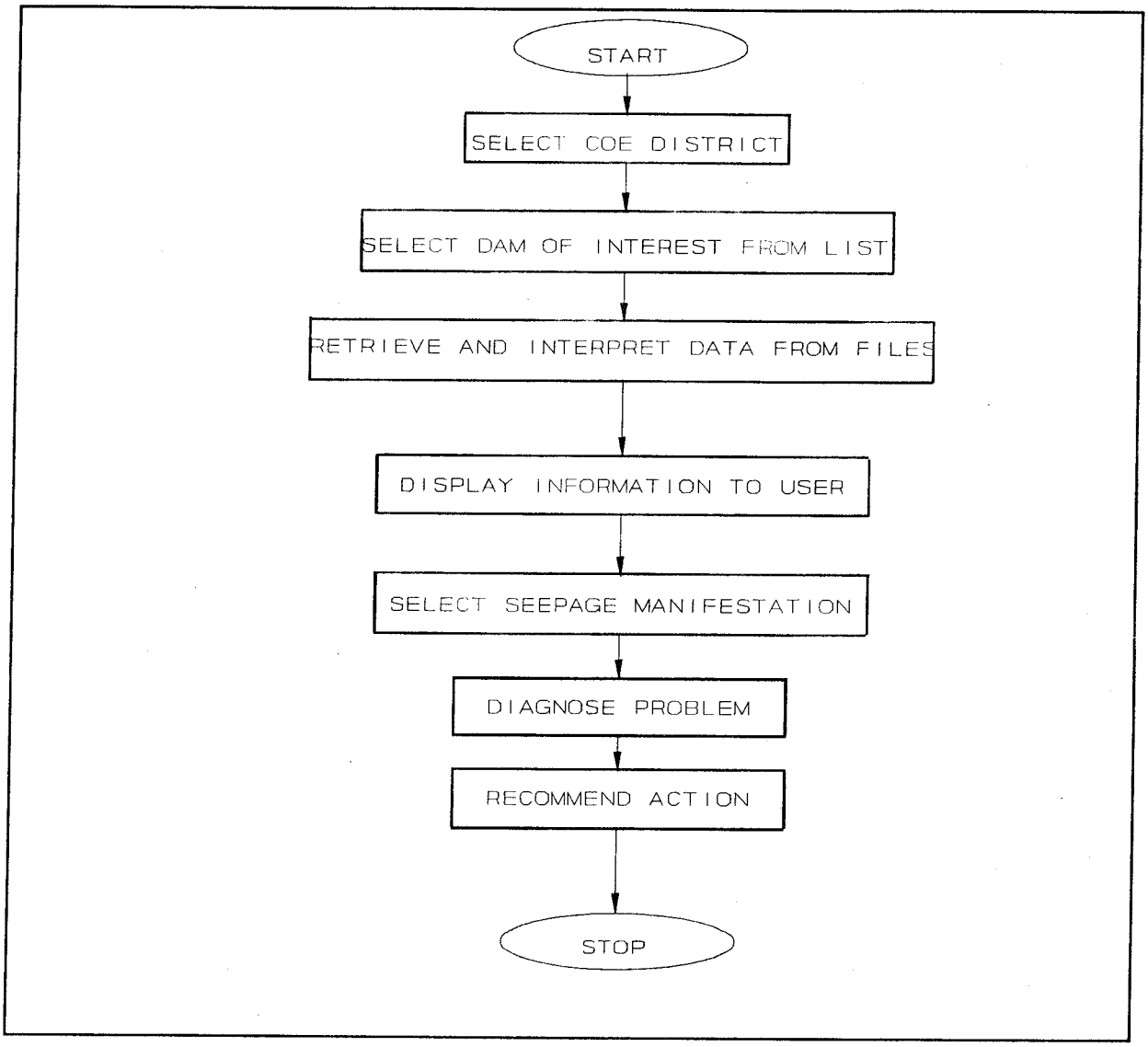

Figure 1. Block diagram of DAMSEAL expert system

Table 1

Purpose and Size of Files Used in DAMSEAL

KNB File	Purpose	Facts	Rules	Lines
DAMSEAL	Start	1068	296	3513
DU	User Data	436	233	3286
DC	Control	27	15	348
DB	Boils	26	10	293
DDS	Damaged Structures	19	6	253
DFR	Changes in Toe Flow Rate	17	5	201
DH	Holes	58	20	748
DMM	Mass Movement	56	20	703
DPR	Piezometric Readings	28	6	296
DTS	Turbid Seepage	40	11	441
DWS	Wet Spots	66	20	811
Totals		1841	642	10,893

lines of programming in a knowledge base.

13. Note that all knowledge bases for DAMSEAL begin with the letter D. This will help to distinguish the knowledge bases for DAMSEAL from other knowledge bases. Also, after the D there are only one or two other letters used to distinguish the knowledge base. This has been done to help reenforce to the user that the knowledge base entitled DAMSEAL is the start.

14. It is important to understand how different aspects of a consultation are divided among the different knowledge bases. Figure 2 illustrates the flow of information during a consultation.

15. The consultation begins with the DAMSEAL knowledge base. If the dam has had previous seepage, that data will be accessed from DAMSEAL and

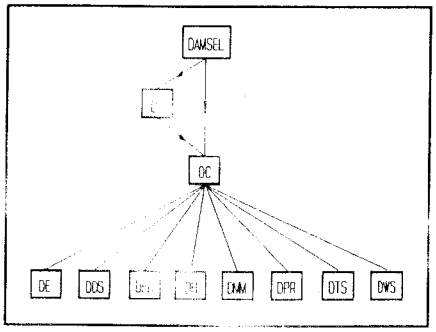

Figure 2. Information flow diagram for knowledge bases

displayed to the user. Then, the system will move or chain to the DC knowledge base to decide where to go for the problem-specific information. If the dam had no record of previous seepage or, if there are no records of CoE dams in the district, then control of the system moves to the DU knowledge base. After the information is retrieved from the databases, it is displayed to the user. Then, as with the DAMSEAL knowledge base, the system will chain to the DC knowledge base to decide where to go for the problem-specific information.

DAMSEAL Knowledge Base

16. The DAMSEAL knowledge base is where the consultation begins. The knowledge base displays the CoE logo and a disclaimer when the system is initiated. Next, the division is identified and a subsequent district. The divisions and districts available through DAMSEAL are given in Table 2.

17. The DAMSEAL knowledge base will provide information on dams that have had previous seepage problems. If the dam of interest is not contained in the list of dams displayed on the screen, it is not contained within the seepage database. At this time, control of the consultation would then be passed on to the DC.KNB. If the dam is on the displayed list, the dam is selected and information about its seepage history is displayed. Information from the CoE DAMS database may also be displayed. It is important to note that DAMSEAL will interpret the codes used to store the information in the dBase III files. For example, if the database records the purpose of a dam as a code of letters -- CC, CD, CIHR, etc.-- DAMSEAL contains the knowledge to interpret the purpose of these dams as CC = flood control, CD = flood and debris control, CIHR = flood control, irrigation, hydroelectric, and recreation.

Table 2

Divisions and Districts Available Through DAMSEAL

Division	District
Lower Mississippi Valley	Memphis, New Orleans, St. Louis, Vicksburg
Missouri River	Kansas City, Omaha
North Atlantic	Baltimore, New York, Norfolk, Philadelphia
North Central	Buffalo, Chicago, Detroit, Rock Island, St. Paul
New England	New England
North Pacific	Alaska, Portland, Seattle, Walla Walla
Ohio River	Huntington, Louisville, Nashville, Pittsburgh
Pacific Ocean	Far East, Honolulu, Japan
South Atlantic	Charleston, Jacksonville, Mobile, Savannah, Wilmington
South Pacific	Los Angeles, Sacramento, San Francisco
Southwest	Albuquerque, Fort Worth, Galveston, Little Rock, Tulsa

18. Once all of the information from the two databases has been displayed, the user is asked to pick one of eight primary manifestations of seepage observed at the dam. These are:

a. Boils.

b. Evidence of damage to appurtenant structures.

c. Changes in flow rates in toe drainage system.

d. Abnormally high piezometric readings.

e. Holes or depressions.

f. Signs of mass movement.

g. Turbid seepage or seepage carrying fines.

h. Wet, soft, or quick spots or marshy areas.

After selecting one of these manifestations of seepage, the DC knowledge base is chained where a decision will be made as to what occurs next.

DU Knowledge Base

19. The DU knowledge base serves the same function as the DAMSEAL knowledge base. The knowledge base will provide information on dams that have not had previous seepage problems. The dam of interest is selected from the displayed list, and, then, information from the CoE DAMS database (e.g. purpose, nearest city, etc.) is displayed.

20. Once the information from the database has been displayed, the user is asked to pick one of eight primary manifestations of seepage observed at the dam. These are the same as were listed for the DAMSEAL knowledge base. After selecting one of these manifestations of seepage, the DC knowledge base is chained where a decision will be made as to what occurs next.

21. The DU knowledge base will also seek pertinent information about a dam if there is no record of a dam in either of the two databases. In this case the only information requested will be the name of the dam and the type of construction (i.e. earth, rock, or concrete). Then, the primary seepage manifestation observed will be asked and control will be passed onto the DC knowledge base.

DC Knowledge Base

22. This knowledge base will control the consultation process once a dam has been selected. The user arrives at this knowledge base initially via the DAMSEAL or DU knowledge base. At that time, a primary seepage manifestation will be known and this knowledge base will chain the appropriate diagnostic knowledge base.

23. This knowledge base is also where the diagnostic knowledge bases will return when they have finished with their diagnosis and recommendations. At that time, the user is given the opportunity to rerun DAMSEAL or to quit. If the user selects the rerun option, he can either select a new dam or continue to use the dam he was previously exploring. DC will then chain to the appropriate knowledge base and remember only pertinent information so the user is not beleaguered with the same questions again and again.

24. If the user elects to quit, DAMSEAL will then ask that a completed data form about their seepage experience be returned to WES. The purpose of this form is to help in updating the seepage database. The form is shown as

Figure 3. Note that most of the information on the top of the form is completed for the user by DAMSEAL.

Dam - [Name of dam]
Division - [Division name]
District - [District name]
Dam construction - [Type of dam]
Dam ID Number - [Dam ID]

Please describe the seepage or leakage problem you have been experiencing and what you have done to remedy the problem. Use additional pages if necessary.

Name -
Address -

Telephone number -
Date -

Please send the completed form to:

W. O. Miller
USAE Waterways Experiment Station
ATTN: CEWES-GS-R
3909 Halls Ferry Road
Vicksburg, MS 39180-6199

Figure 3. Form to be used by user to update seepage database

DB Knowledge Base

25. This knowledge base contains the knowledge necessary to draw conclusions and make recommendations if the primary seepage manifestation is a boil(s). This knowledge base has the ability to make four different conclusions about the cause of the boils based on specific information provided by the user during the consultation. The first of these conclusions is that what the user may think are boils located on the embankment are probably best

solved using the turbid seepage knowledge base. The other three conclusions and recommended actions are for boils. These conclusions and recommendations are illustrated as follows:

1. CONCLUSION

I do not believe that these are truly boils by the classical definition. Since the "boils" are located on the embankment, the buildup of a ring of transported fines around the seepage exit would be difficult. The line of questioning is therefore being changed to address turbid seepage or seepage carrying fines, which is anticipated to be the problem. Also, remedial actions for the embankment would be different from that used downstream of the dam where boils would typically be discovered.

2. CONCLUSION

The boils are probably due to high piezometric gradients and velocities at exit in silty/sandy foundation.

RECOMMENDATION

Reduce the piezometric head in the foundation with new or additional relief wells.

If relief wells are insufficient or impractical, install a downstream berm to increase the seepage path and reduce the gradient.

3. CONCLUSION

The boils are probably due to high piezometric gradients and velocities at exit from cavities and fractures in the rock foundation.

RECOMMENDATION

Install either an upstream blanket or cutoff, if one does not already exist. If it presently exists, it is in need of repair.

4. CONCLUSION

The boils and/or silt volcanoes in the vicinity of the dam are probably due to liquefaction of noncohesive materials during the recent earthquake.

RECOMMENDATION

Continue to monitor the boils for decreasing flow rate and inspect the [Name of dam] for evidence of new seepage.

26. Of course, the fifth conclusion that could be drawn is that DAMSEAL is unable to determine the cause of the seepage. This conclusion will also be applicable to all of the other diagnostic knowledge bases.

DDS Knowledge Base

27. This knowledge base contains the knowledge necessary to draw conclusions and make recommendations if the primary seepage manifestation is a damaged structure(s). This knowledge base has the ability to make five different conclusions about the cause of the damage to appurtenant structures based on specific information provided by the user during the consultation. These conclusions and recommendations are illustrated as follows:

1. CONCLUSION

The misalignment/damage to the conduit is probably due to settlement of the conduit and subsequent separation of the joints.

RECOMMENDATION

Grout the perimeter around the conduit to prevent additional movement. The displaced joints should be resealed and refinished to provide a smooth hydraulic surface.

2. CONCLUSION

The misaligned conduit is probably due to differential settlement of the conduit foundation.

RECOMMENDATION

Grout the perimeter around the conduit to prevent additional movement. The displaced joints should be resealed and refinished to provide a smooth hydraulic surface.

3. CONCLUSION

The damaged or misaligned structures on or in the vicinity of the dam is probably due to the earthquake.

At present, this is not a seepage problem. However, it could develop into one and should be evaluated.

RECOMMENDATION

Remedial actions should be taken to repair the damaged structures and to monitor the response of the structure in the future. A detailed inspection of other structures at [Name of dam] should be made since some damage has already been observed.

4. CONCLUSION

The damage to the structures on or in the vicinity of the dam is probably due to deterioration of the asphalt/concrete because of thermal stress, frost heave, corrosion of reinforcement, weathering, and/or swelling soils.

At present, this may not be a seepage problem. However, it could lead to one if appropriate measures are not taken.

RECOMMENDATION

Remedial actions should be taken to repair the damaged structures and to monitor the response of the structure in the future. If swelling soils are considered to be the problem, the structure should be anchored.

5. CONCLUSION

The damage/misalignment of the structures in the vicinity of the dam is probably due to uplift from high piezometric levels.

RECOMMENDATION

Relief wells/drains, or underdrains should be installed or rehabilitated to reduce the piezometric heads around the structure. The structure should then be dewatered and repairs made to the damaged area.

DFR Knowledge Base

28. This knowledge base contains the knowledge necessary to draw conclusions and make recommendations if the primary seepage manifestation is change in flow rate in the toe drainage system. This knowledge base has the ability to make three different conclusions about the cause of the increase or decrease in the toe drainage flow rate based on specific information provided by the user during the consultation. These conclusions are illustrated as follows:

1. CONCLUSION

The flow rate increases in the toe drainage may be due to one of the following:

Inadequate filter design.
Failure of the core.
Dispersive material in the core.
Breach in membrane and/or cutoff.
Development of cracks due to hydraulic fracturing.
Internal cracking or piping.

1. RECOMMENDATION

Consider an immediate reduction in the pool level.

Contact the [Division name] Foundation and Material Branch.

2. CONCLUSION

The decreasing flow rates in the toe drainage system may be due to sedimentation of the reservoir.

Sedimentation is not a safety issue and therefore does not require any action from the standpoint of seepage/leakage control.

RECOMMENDATION

Take soundings in the reservoir to verify this conclusion and update reservoir storage capacity records.

3. CONCLUSION

The decreasing flow rates in the toe drainage system may be due to clogged drains or filters caused by internal piping or they may be due to clogged relief wells.

RECOMMENDATION

Evaluate the current efficiency of the existing relief wells in the toe drainage system.

If there has been an appreciable decrease in the efficiency of the relief wells, they should be rehabilitated by a chemical treatment or horizontal jetting.

If the relief wells are not the problem, install additional internal drainage such as finger or trench drains.

DH Knowledge Base

29. This knowledge base contains the knowledge necessary to draw conclusions and make recommendations if the primary seepage manifestations are holes in the abutment, embankment, or foundation of the dam. This knowledge base has the ability to make sixteen different conclusions about the cause of the holes based on specific information provided by the user during the consultation. These conclusions are illustrated as follows:

1. CONCLUSION

The holes or depressions at the abutment/embankment interface may be due to hydraulic fracturing resulting from poor or inadequate abutment preparation.

RECOMMENDATION

An immediate reduction in pool level should be considered to evaluate the problem.

Contact the [Division name] Foundation and Material Branch.

2. CONCLUSION

The holes were probably made by animals.

RECOMMENDATION

The holes should be filled and compacted with an impervious material. Where practical, the animals should be trapped and relocated. If relocation is not possible, or practical, preventative measures, such as wire mesh or riprap, should be used to discourage the burrowing activities in the vicinity of the dam.

3. CONCLUSION

The holes or depressions on the embankment are probably caused by embankment materials transported into voids in the foundation.

RECOMMENDATION

Flow through the foundations rock must be reduced and the voids filled. A positive upstream cutoff, such as a slurry wall or concrete cutoff wall, is recommended for reducing the underseepage.

In addition, the foundation, in the areas of the suspected seepage path, should be grouted to fill the voids and to reduce the permeability.

4. CONCLUSION

The holes on the embankment are probably due to piping of dispersive soil.

RECOMMENDATION

The soil in the area of the holes needs to be lime stabilized. It is recommended that a shallow layer of filter material be placed at the bottom of the hole (after stabilization) and the hole(s) be filled and compacted with an impervious backfill.

5. CONCLUSION

The holes or depressions on the abutment of the dam are probably due to collapse of the overburden into solutioned, soluble, or highly fractured foundation materials.

RECOMMENDATION

Flow through the foundation rock must be reduced and the voids filled. A positive upstream cutoff, such as a slurry wall or concrete cutoff wall, is recommended for reducing the underseepage.

In addition, the foundation, particularly in the areas of the suspected seepage path, should be grouted to fill the voids and to reduce the permeability.

6. CONCLUSION

The holes or depressions on the foundation of the dam are probably due to collapse of the overburden into solutioned, soluble, or highly fractured foundation materials.

RECOMMENDATION

Flow through the foundation rock must be reduced and the voids filled. A positive upstream cutoff, such as a slurry wall or concrete cutoff wall, is recommended for reducing the underseepage.

In addition, the foundation, particularly in the areas of the suspected seepage path, should be grouted to fill the voids and to reduce the permeability.

7. CONCLUSION

The holes or depressions on the embankment, over or around the pipe or conduit, are probably due to piping along the pipe or conduit because of boundary seepage along the pipe or conduit, or because of a leaky or rusted conduit or pipe.

RECOMMENDATION

The pipe or conduit must be repaired or replaced to eliminate the seepage path along the outside surface.

Grout the perimeter around the conduit to prevent additional movement and to seal the seepage path. Any displaced joints should be resealed and refinished, if possible, to provide a smooth hydraulic surface.

8. CONCLUSION

The holes near the structural interface (wing wall, etc.) are probably due to piping through backfill which is insufficiently compacted.

RECOMMENDATION

The holes or depressions should be backfilled and compacted. The seepage path at the structural interface should be repaired by either grouting the interface or by excavating and placing filter material between the backfill and the structure.

9. CONCLUSION

The holes or depressions in the embankment are probably due to the inappropriate selection of embankment material (e.g., broadly graded soil) or to coarsely graded rockfill left in the embankment.

RECOMMENDATION

The area beneath and around the holes should be probed or drilled to determine if any voids are present. If any are detected they should be filled by placement or injection of sand. The holes should then be repaired (backfilled) with an impervious material.

10. CONCLUSION

The holes or depressions in the embankment are probably due to inadequate core filters or inadequate cutoff, or to inadequate foundation preparation.

RECOMMENDATION

Flow through the foundation rock must be reduced and the voids filled. A positive upstream cutoff, such as a slurry wall or concrete cutoff wall, is recommended for reducing the underseepage.

In addition, the foundation, particularly in the areas of the suspected seepage path, should be grouted to fill the voids and to reduce the permeability.

11. CONCLUSION

The strong motion of the earthquake probably triggered large deformations in lenses of liquefiable foundation material, thus causing the holes or depressions in the vicinity of the dam.

RECOMMENDATION

Since apparent deformations occurred in the foundation, the entire dam should be closely inspected for other signs of distress. The holes or depressions should be backfilled and compacted and monitored for any future settlement or movement.

12. CONCLUSION

The holes upstream of the dam are probably due to piping of the upstream blanket into improperly graded foundation materials or into a foundation with cavities, fissures, or fractures.

RECOMMENDATION

The upstream blanket must be repaired or extended or an impervious membrane placed on the upstream face of the dam. To repair the blanket, the pool should be reduced to expose the upstream toe of the dam and the blanket should be both thickened and extended. If a membrane is used, consideration should be given to keying the upstream end into a positive cutoff wall, as shown in the following figures.

13. CONCLUSION

The holes upstream of the dam are probably due to piping of the upstream blanket into improperly graded foundation materials or into a foundation with cavities, fissures, or fractures.

RECOMMENDATION

The upstream blanket must be repaired or extended. To repair the blanket the pool should be reduced to expose the upstream toe of the dam and the blanket should be both thickened and extended.

14. CONCLUSION

The holes or depressions on the dam foundation are probably due to settlement or consolidation of lenses of weak foundation material or they may be due to decaying organic matter in the foundation.

RECOMMENDATION

Backfill and compact the holes or depressions with impervious material and monitor the situation for any future movement.

If the holes reappear, consideration should be given to consolidation grouting of the foundation in the affected area.

15. CONCLUSION

The holes or depressions near a relief well are probably due to piping of the well filter and/or the foundation material because of an inappropriate filter or because of a deteriorated well screen.

RECOMMENDATION

Backfill the damaged well with sand.

Install a new relief well with a graded filter adjacent to the old well to prevent further piping of foundation materials.

16. CONCLUSION

The holes or depressions near the toe are probably due to a collapse of the toe drainage system or to a failure of a joint in a pipe.

RECOMMENDATION

The toe drainage system must be repaired or replaced to accommodate the through seepage and prevent an increase in piezometric levels within the dam.

Alternatively, relief wells can be installed in the affected area to intercept the flow increase caused by the damaged drain.

DMM Knowledge Base

30. This knowledge base contains the knowledge necessary to draw conclusions and recommendations if the primary seepage manifestations are signs of mass movement. This knowledge base has the ability to make thirteen different conclusions about the cause of the mass movement based on specific information provided by the user during the consultation. These conclusions are illustrated as follows:

1. CONCLUSION

The massive slide is probably due to a decrease in shear strength caused by the decrease in effective stress from the high seepage pressures. Since materials are apparently being lost from the embankment, poor or inappropriate embankment zonation may be causing the problem.

RECOMMENDATION

The high piezometric levels must be reduced in the embankment and preferably at the seepage entrance. An upstream membrane, blanket, or positive cutoff is recommended. In addition, consideration may be given to the placement of a downstream berm to increase the safety factor of the slope after the slide has been repaired.

2. CONCLUSION

The cracks, slides, bulges, or sags, or misaligned structures on the embankment, are probably caused by inadequate strength due to a reduction in effective stress caused by high seepage pressures.

RECOMMENDATION

The seepage pressures have to be reduced by either improving the upstream cutoff or enhancing the internal drainage. Normally, the pool level should be reduced and an upstream membrane or blanket or positive cutoff should be installed.

If pool reduction and upstream repairs are impractical, the toe drainage system should be improved to enhance the internal drainage. In this case, additional relief wells or filter drains are recommended.

3. CONCLUSION

The shallow sloughs on the embankment are probably due to excess pore pressures and decreases in effective stress. This is not normally considered to be a dam safety problem unless the sloughing is deep and progressive.

RECOMMENDATION

Remedial actions should be taken to repair the damaged area and the repairs should be monitored for future signs of distress.

If future rapid drawdowns are anticipated, consider installing a weighted pervious blanket on the upstream slope to assist in stabilization during these periods.

4. CONCLUSION

The progressive sloughing on the downstream slope of the embankment is probably due to too steep a slope or to decreases in effective stress and shear strength because of seepage pressures. Another possibility is settlement caused by saturation, possibly related to poor construction.

RECOMMENDATION

Flatten the downstream slope or add a sloping weighted filter berm to stabilize the slope until excess pore or seepage pressures dissipate.

Or, monitor the piezometric levels within the embankment and if they appear to be excessive and tied to the reservoir pool levels, improve the upstream cutoff measures with either an upstream blanket or trench cutoff.

5. CONCLUSION

The heave at the toe of the downstream slope of the embankment may be due to sloughs caused by too steep a slope or to decreases in effective stress and shear strength because of seepage pressures. Another possibility is settlement caused by saturation, possibly related to poor construction.

RECOMMENDATION

Flatten the downstream slope or add a sloping weighted filter berm to stabilize the slope until excess pore or seepage pressures dissipate.

Or, monitor the piezometric levels within the embankment and if they appear to be excessive and tied to the reservoir pool levels, improve the upstream cutoff measures with either an upstream blanket or trench cutoff.

6. CONCLUSION

The cracks, slides, sloughs, bulges, sags, or misaligned structures were probably caused by the earthquake.

RECOMMENDATION

Remedial actions should be taken to repair the damaged area or structure and the repairs should be monitored for future signs of distress. A detailed inspection of other areas and structures at [Name of dam] should be made since some damage has already been observed.

7. CONCLUSION

The heave of the toe at the downstream slope of the dam may be a result of sloughing caused by the earthquake.

RECOMMENDATION

Remedial actions should be taken to repair the damaged area and the repairs should be monitored for future signs of distress. A detailed inspection of other areas and structures at [Name of dam] should be made since some damage has already been observed.

8. CONCLUSION

The cracks in the dam are probably due to shrinkage, differential movement, expansion, seismic activity, overstress, etc. At present, they may not be a seepage problem, but they could precipitate seepage in the future.

RECOMMENDATION

Determine the extent of the cracks and repair them.

Monitor, on a regular basis, for additional cracking or the development of wet areas or leakage.

The stability of the dam may require reevaluation depending upon the location and extent of the cracking.

9. CONCLUSION

There is apparent communication between the reservoir and the crack which could indicate a serious seepage or leakage problem depending upon the quantity of seepage.

RECOMMENDATION

Locate the source (entrance) of the seepage either by lowering the pool level or by using a controlled dye release along the upstream face. The cracks should then be sealed and repaired or the upstream section of the dam refaced to prevent further seepage. In addition, the stability of the dam may require reevaluation depending upon the location and extent of the cracking.

10. CONCLUSION

The cracks or sags or misaligned structures on the embankment are probably due to settlement or differential settlement of the embankment and/or to foundation consolidation. The settlement by itself is not considered to be a seepage problem, but it can and may have already precipitated seepage.

RECOMMENDATION

Repair the settled area, install settlement plates and surface monuments, and monitor the area regularly to determine the location of the movement.

In addition, increase monitoring activities for seepage on the downstream slope and for fines in the toe drainage system. If either start to show an increase, damage to the core may be occurring and seepage control measures may be required.

11. CONCLUSION

The cracks or sags or misaligned structures on the embankment are probably due to loss of embankment materials into subsurface cavities or fissures and fractures. The movement by itself is not primarily a seepage problem, but it can and may have already precipitated seepage.

RECOMMENDATION

The high piezometric levels must be reduced in the foundation and preferably at the seepage entrance. An upstream membrane or blanket may solve the problem, but a more positive cutoff, such as a grout curtain, slurry wall, or concrete cutoff walls, is recommended.

12. CONCLUSION

The heave near the toe is probably due to uplift from confined pervious layers.

RECOMMENDATION

Relief wells or trench drains should be installed to reduce the piezometric heads around the area of the heave.

13. CONCLUSION

The heave at the toe of the downstream slope may be due to the beginning of a massive slide. The probable cause is a decrease in shear strength caused by a decrease in effective stress due to the high seepage pressures. Since material is apparently being lost into the toe drainage system, poor or inappropriate embankment zonation may be causing the problem.

RECOMMENDATION

The high piezometric levels must be reduced in the embankment and preferably at the seepage entrance. An upstream membrane, blanket, or positive cutoff is recommended. In addition, consideration should be given to the placement of a downstream berm to increase the safety factor of the downstream slope after the slide area and heave have been repaired.

DPR Knowledge Base

31. This knowledge base contains the knowledge necessary to draw conclusions and make recommendations if the primary seepage manifestation is abnormally high piezometric levels. This knowledge base has the ability to make four different conclusions about the cause of the high piezometric readings based on specific information provided by the user during the

consultation. These conclusions are illustrated as follows:

1. CONCLUSION

The high piezometric levels in the abutment may be due to a direct hydraulic connection to the reservoir and to insufficient downstream relief.

RECOMMENDATION

Extend or add an upstream impervious blanket onto the abutment intake zone.

2. CONCLUSION

The high piezometric levels in the embankment may be due to inadequate internal drainage, clogged drains, abnormally wet fill, abutment leakage into the embankment, or to inadequate cutoff.

RECOMMENDATION

Add an impervious blanket or membrane on the upstream face of the dam if one does not exist.

Add trench or finger drains if there is an existing impervious upstream blanket on the face of the dam.

3. CONCLUSION

The high piezometric levels in the foundation may be due to a breach in the blanket or to an inadequate blanket.

RECOMMENDATION

Add additional impervious materials to the upstream blanket.

If this is not practical, install a slurry trench near the top of the upstream face of the dam.

4. CONCLUSION

The high piezometric levels in the foundation may be due to a breach in the cutoff or to an inadequate cutoff.

RECOMMENDATION

If the piezometric levels are manageable, then install additional relief wells to reduce the downstream heads.

If this proves to be inadequate, install additional positive cutoffs such

as, a slurry trench.

DTS Knowledge Base

32. This knowledge base contains the knowledge necessary to draw conclusions and make recommendations if the primary seepage manifestation is turbid seepage or seepage carrying fines. This knowledge base has the ability to make eight different conclusions about the cause of the turbid seepage based on the additional specific information provided by the user during the consultation. These conclusions are illustrated as follows:

1. CONCLUSION

The turbid seepage on the downstream slope may be due to piping because of inadequate design and construction (e.g. too steep slope, lenses of improper material, absence of zonation, etc.).

RECOMMENDATION

If the seepage is emerging relatively low on the embankment slope, the seepage path can be increased by the addition of a filter berm on the downstream toe of the embankment. Otherwise, the seepage must be cutoff, or intercepted. A positive cutoff can be accomplished by either the addition, or repair, of an upstream impervious membrane on the embankment or by construction of a cutoff wall within the embankment.

If the seepage is to be intercepted, the remedial measure depends upon the extent of the problem. If the turbid seepage is very localized, trench drains or filtered collector pipe systems may be installed. If the seepage is extensive, an inclined drain must be installed and connected to the horizontal drainage system within the drain.

2. CONCLUSION

The turbid seepage on the downstream slope may be due to piping resulting from inadequate filter design, insufficient internal drainage, clogged drains, or filters.

RECOMMENDATION

If the seepage is emerging relatively low on the embankment slope, the seepage path can be increased by the addition of a filter berm on the downstream toe of the embankment. Otherwise, the high (excess) piezometric levels must be reduced. This can be accomplished either within the embankment by construction of a cutoff wall or at the exit by construction of a trench drain or filtered pipe collector system.

3. CONCLUSION

The turbid seepage emerging through the toe drainage system may be due to piping resulting from inadequate filter design or from failure of a pipe.

RECOMMENDATION

Additional relief wells should be installed. If the turbid seepage is emerging from a relief well, the well screen and/or filter are not functioning properly and the well should be backfilled with filter material (sand). A new relief well should then be installed adjacent to the "abandoned" well.

If the turbid seepage is emerging through cracks, construction joints, or other structural features of the toe drainage system, there is an excess seepage gradient which should be reduced by adding additional relief wells in the area of the turbid seepage.

If the problem is wide spread, i.e., affecting the entire toe drainage system, pool reduction should be considered with the installation of a cutoff wall in the embankment.

4. CONCLUSION

The turbid seepage from or around the conduit may be due to piping in improperly graded or compacted conduit bedding/backfill, hydraulic fracturing of backfill adjacent to the conduit, voids in backfill due to overhangs and foundation rock which were disturbed during construction, or piping along a leaky conduit or into a conduit at a leaky joint.

RECOMMENDATION

If the fines, or turbid seepage, are emerging from inside the conduit, the construction joint(s) or crack(s) permitting the material access into the conduit should be sealed and the area outside the conduit grouted.

If the seepage is emerging downstream around the perimeter of the conduit, partial cutoffs, or limited grout curtains, should be installed at several locations along the length of the conduit to increase the seepage path and reduce the gradient. Also, the immediate area behind the conduit should be grouted to replace any material removed by piping.

5. CONCLUSION

The turbid seepage adjacent to a spillway or stilling basin slab may be due to piping because of an inadequate filter.

RECOMMENDATION

If the turbid seepage is emerging through cracks, construction joints, or other structural features of the spillway or stilling basin, there is an excess seepage gradient which should be reduced by adding additional

relief wells in the area of the turbid seepage.

Alternatively, weepholes or underdrains with properly graded filters can be installed to reduce the excess seepage gradient at the structure. If voids have been created beneath, or around the structure, they should be grouted to maintain the stability of the structure.

6. CONCLUSION

The turbid seepage adjacent to a spillway or stilling basin slab may be due to piping because of an inadequate filter.

RECOMMENDATION

Install either an upstream blanket or cutoff, if one does not already exist. If it presently exists, it is in need of repair.

7. CONCLUSION

The turbid seepage emerging from the foundation is probably due to liquefaction by the earthquake.

RECOMMENDATION

Continue to monitor the boils for decreasing flow rate and inspect the [Name of dam] for evidence of new seepage.

8. CONCLUSION

The turbid seepage in the relief well may be due to piping of the well filter and/or foundation material because of improper well filter design or because of well screen failure.

RECOMMENDATION

Additional relief wells should be installed. If the turbid seepage is emerging from a relief well, the well screen and/or filter are not functioning properly and the well should be backfilled with filter material (sand). A new relief well should then be installed adjacent to the "abandoned" well.

DWS Knowledge Base

33. This knowledge base contains the knowledge necessary to draw conclusions and make recommendations if the primary seepage manifestation is wet, soft, or quick spots on the dam. This knowledge base has the ability to make seventeen different conclusions about the cause of the wet spots based on

specific information provided by the user during the consultation. These conclusions are illustrated as follows:

1. CONCLUSION

The localized wet, soft, or quick spots on the embankment near the abutment or other structural interface are probably due to hydraulic fracturing.

RECOMMENDATION

If the flow rates are increasing, then an immediate reduction in pool level should be considered.

Contact the [Division name] Foundation and Material Branch.

2. CONCLUSION

The wet, soft, or quick spots on the embankment are probably due to insufficient internal drainage or to clogged drains or filters.

RECOMMENDATION

If the flow rates are not excessive, install a trench drain collector system to reduce the water table and drain the area.

If the flow rates are significant, install a membrane or blanket on the upstream face of the dam to reduce the inflow into the embankment.

3. CONCLUSION

The localized wet spots on the embankment are probably due to the inappropriate selection and/or placement of embankment materials resulting in permeable layers.

RECOMMENDATION

Install vertical sand or wick drains if a horizontal drain is located beneath the downstream toe of the dam.

If no horizontal drain exists, install a downstream filter berm.

4. CONCLUSION

The wet spots on the embankment are probably due to temporary saturation because of recent precipitation. The wet spots are not considered to be a safety problem.

RECOMMENDATION

If the flow rates are not excessive, install a trench drain collector system to reduce the water table and drain the area.

5. CONCLUSION

The wet, soft, or quick spots on the embankment are probably due to loose or inadequately compacted material at the abutment or embankment interface or they may be due to improper foundation preparation.

RECOMMENDATION

If the flow rates are not excessive, install a trench drain collector system to reduce the water table and drain the area.

If the flow rates are significant, install a downstream filter berm.

6. CONCLUSION

The wet, soft, or quick spots on the embankment are probably caused by high groundwater levels in the abutment due to pool impoundment.

RECOMMENDATION

Extend or add an upstream impervious blanket onto the abutment intake zone.

7. CONCLUSION

The extensive wet, soft, or quick spots on the embankment are probably caused by a lack of filters, by improper filter design (gradation, thickness, or clogged filter), or by an inadequate core or cutoff.

RECOMMENDATION

If the extensive wet spots are along the toe of the embankment, install a downstream filter berm.

If the elevation of the wet spots is too high to make installation of a berm practical, install a membrane or blanket on the upstream face of the dam to reduce the inflow into the embankment.

8. CONCLUSION

The excess seepage on the downstream slope of the embankment is probably due to leakage through cracks, joints, or fissures in the upstream facing. The cracks and fissures may, in turn, be caused by deterioration of the facing, settlement of the embankment or foundation, and/or to the collapse of embankment material into voids in the foundation.

RECOMMENDATION

If the seepage from the wet spots is stable, make plans to repair or replace the upstream facing.

If the seepage is increasing, consider an immediate reduction in the pool level and make plans to repair or replace the upstream facing.

9. CONCLUSION

The excess seepage on the downstream slope of the embankment is probably due to cracks in the core which have occurred as a result of shrinkage, differential settlement, and/or load transfer between zones.

RECOMMENDATION

If the seepage from the wet spots is stable, make plans to repair or add an upstream facing.

If the seepage is increasing, consider an immediate reduction in the pool level and make plans to repair or add an upstream facing.

10. CONCLUSION

The wet spots on the embankment are probably due to cracks in the concrete which have been caused by shrinkage, differential movement, seismic activity, overstress, or to deterioration of the concrete due to creep.

RECOMMENDATION

Seal or reface the upstream face of the dam.

11. CONCLUSION

The leakage at the joints between the monoliths is probably due to open joints and/or torn waterstops.

RECOMMENDATION

Seal or grout the leaking joints.

12. CONCLUSION

The wet spots around the pipe or conduit on the embankment are probably due to leaks or to a rupture in the pipe or conduit.

RECOMMENDATION

Repair or replace the pipe or conduit.

13. CONCLUSION

The wet spots at the construction lifts on the embankment are probably due to the lack of a good seal on the construction joints.

RECOMMENDATION

Seal or grout the leaking joints.

14. CONCLUSION

The wet, soft, or quick spots on the abutment are probably caused by the opening of cavities when the infilling materials are eroded. This may be caused by the dissolution of soluble materials or by the presence of open fractures.

RECOMMENDATION

If the flow rates are not excessive, install a downstream filter berm.

If the flow rates are significant, install a positive cutoff such as a grout curtain or a concrete cutoff wall.

15. CONCLUSION

The wet, soft, or quick spots of limited areal extent on the abutment are probably due to the interlaying of pervious material in the abutment. This is typical of glacial drift and paleo terrace deposits.

RECOMMENDATION

If the flow rates are not excessive, install a trench drain collector system to reduce the water table and drain the area.

If the flow rates are significant, install a downstream filter berm.

16. CONCLUSION

The wet, soft, or quick spots on the foundation are probably caused by excessive piezometric pressures in subsurface formations (such formations often have an outcrop of pervious material).

RECOMMENDATION

Reduce the piezometric head in the foundation with new or additional relief wells.

If relief wells are insufficient or impractical, install a downstream berm to increase the seepage path and reduce the gradient.

17. CONCLUSION

The wet spots or seeps emerging downstream of the toe are probably due to openings, cracks, permeable layers, etc. in the foundation.

RECOMMENDATION

Install a positive cutoff such as a grout curtain or a slurry trench.

Databases

34. Two databases of information about dams are included with the DAMSEAL expert system. These databases are dBase III files. One is Seepage.dbf, a database of information on dams that have experienced seepage. The other database file, Cdam.dbf, contains general information on all dams for which the Corps has responsibility. Both of these dBase files have been slightly modified to make them work with DAMSEAL. Therefore, it is important to use the database files supplied with the DAMSEAL knowledge bases.

PART III: SYSTEM OPERATION

General Considerations

35. DAMSEAL has been developed as a user friendly system. Initially, the user enters an integer between 1 and 11 to select a division. Any other input will be noted by DAMSEAL as an incorrect entry and redisplayed to the user with a warning message. After the division is known, the district, dam, and primary seepage manifestation are selected via lists. Once the consultation progresses to a diagnostic knowledge base, the responses required for the diagnosis are either selected from a list or are true or false-type answers.

36. After the information on the problem is provided, DAMSEAL will make a diagnosis of the problem and recommend corrective action(s). When making a recommendation, DAMSEAL has available for its use twenty figures to help the user understand the recommendation. These figures were developed with the Dr. Halo III drawing package and are displayed on Level5 with the PAINT command. Obviously, DAMSEAL is not all knowing, and one of its possible conclusions is that it does not know the cause of the problem.

Delivery

37. In order to economically distribute DAMSEAL within the Corps, Level5 was selected as the expert system building tool. It was necessary to select a tool that could access the existing CoE dBase III files, provide graphical support, and not require the procurement of expensive run-only software. DAMSEAL has been developed so that the run-only software is compiled together with the knowledge bases and databases. Also, since Level5 provides a bridge to the dBase files, there is no requirement for users to have dBase on their computers. In other words, DAMSEAL is a self-contained system with no other software requirements. Hardware requirements are an IBM-compatible personal computer, 640K RAM, and a hard disk with 2 Megabytes of memory available.

System Installation and Execution

38. To install:

1. Insert the diskette labeled DISK 1 into your A floppy drive.
2. Change directory to that drive by typing the following:

   A: <enter>
3. Now you are ready to begin installing the DAMSEAL expert system by typing the following:

   INSTALL <enter>

   Once you type the above command, you are asked two questions:

   Do you have a color monitor: (Y) :

   Install from? (A:\) :

   The default to the above questions are in parentheses. After you answer these questions, the installation continues; it will create a directory \DAMSEAL on your hard drive and copy all information from the diskette to that directory.
4. After installation is completed, remove DISK 1 and insert DISK 2. Then type the following commands:

   C: <enter>

   CD \DAMSEAL <enter>

   COPY A:*.* <enter>

   The above commands will copy everything from DISK 2 to your directory DAMSEAL on your hard drive. The installation is now complete.
5. You are now ready to run the DAMSEAL expert system. Type the following command:

   DAMSEAL <enter>

   You are now executing DAMSEAL. Please follow the instructions.

Operation of DAMSEAL

39. This section of the report will illustrate a typical consultation with DAMSEAL. The primary seepage manifestation will be boils at the Enid Dam in the Vicksburg District. The user starts the consultation by typing the word "DAMSEAL" and then pressing the ENTER key. After the title and disclaimer screens are displayed, the consultation begins in earnest. The screens shown to the user will be illustrated in this example. The bold face type are

the answers selected/entered by the user.

Please enter the number associated with the Corps of Engineers division where the dam of concern is located. Please use the number assigned from the following list:

1	Lower Mississippi Valley	7	Ohio River
2	Missouri River	8	Pacific Ocean
3	New England	9	South Atlantic
4	North Atlantic	10	South Pacific
5	North Central	11	Southwestern
6	North Pacific		

: 1

Please use the UP/DOWN arrow keys to select the appropriate CoE district within the Lower Mississippi Valley Division.

Press ENTER after making your selection.

Memphis
New Orleans
St. Louis
==> **Vicksburg**

Please use the UP/DOWN arrow keys to select the appropriate dam within the Vicksburg District. If your dam name does not appear on this list, please select "Not listed."

Press ENTER after making your selection.

==> **Enid Dam**
Grenada Dam
Sardis Dam
Not listed

I have information on your dam construction from two different databases.

Seepage database - COMPACTED EARTH
CoE Dams database - EARTH

Please select one of the following categories that best describes the type of construction at ENID DAM where the leakage is occurring.

Use the UP/DOWN arrow keys to make your selection and then press ENTER.

==> **earth embankment**
concrete or roller compacted concrete
rockfilled

The ENID DAM has had a total of 1 previous problem(s) with seepage-leakage of water according to my seepage database. This information was last updated 1986.

The original seepage control measures at this dam were:

RELIEF WELLS

Information from the seepage database about the foundation is summarized below:

Rock foundation - SEDIMENTARY: GRAVEL, SANDSTONE
Rock condition - NA
Soil foundation - FINE-GRAINED AND COURSE-GRAINED
Soil type - LOESS, CLAYS, SILTS, SILTY SAND
Geologist's note -

Press the F7 key to PRINT this page.
Press the ENTER key to continue.

Information I have about the seepage problem(s) at the ENID DAM are summarized on the following screen(s). I have provided information on as many as two actions taken on a single problem.

Date - 1983
Problem description - WET SPOTS, SAND BOILS, UPLIFT, HIGH PIEZO LEVELS
Problem location - D/S TOE, STILLING BASIN, OUTLET WORKS
Quantity of seepage -

First action taken -
NEW WELLS/DRAINS
Monitoring information on action taken -
NA

Second action taken (if necessary) -

Monitoring information on action taken -

Press the F7 key to PRINT this page. Press the ENTER key to continue.

I have additional information on ENID DAM
from the CoE Dams database.

Would you like to see this information?

TRUE FALSE

ENID DAM

Dam ID - MS01495 Information as of - 1981

PURPOSE
Flood control, recreation

DESCRIPTION	CURRENT INFORMATION
State	MS
County	YALOBUSHA
Year completed	1952
River	YOCONA RIVER
Lake	ENID LAKE
Nearest downstream city	CROWDER MISSISSIPPI
Distance	13 miles
Population	815
Category	RESERVOIR

Press the F7 key to PRINT this page. Press the ENTER key to continue.

ENID DAM

Dam ID - MS01495 Information as of - 1981

Normal capacity	57600 acre ft*
Maximum capacity	1213500 acre ft
Hydraulic height	101 ft
Structure height	103 ft
Crest length	8400 ft
Seismic zone	2
Hazard potential	High or 1

---

* A table of factors for converting non-SI to SI (metric) units of measurement is presented on page 3.

Type of spillway	Uncontrolled
Spillway width	200.00 ft
Spillway discharge	49700.00 cu ft/sec
Number of locks	0

Press the F7 key to PRINT this page. Press the ENTER key to continue.

On the next page, I am going to ask you to tell me one of the primary manifestations of seepage or leakage that you have observed at ENID DAM.

It can be located anywhere -- not just on the embankment.

To make your selection, you will use the UP/DOWN ARROW keys to select a type of seepage manifestation and then press ENTER.

If you find that you need help once you start your selections, press the F5 key for additional technical and operational instructions.

Press the F7 key to PRINT this page.
Press the ENTER key to continue.

==> **Boils**
Evidence of damage to appurtenant structures
Changes in flow rates in toe drainage system
Abnormally high piezometric readings
Holes or depressions
Signs of mass movement
Turbid seepage or seepage carrying fines
Wet, soft, or quick spots or marshy areas

What is the location of the boils?

Use the UP/DOWN arrow keys to make your selection and then press ENTER.

==> **Downstream of the dam**
Embankment

Are the boils located in silty/sandy soil?

TRUE FALSE

Is the foundation material beneath the boils solutioned, soluble, or highly fractured rock?

TRUE FALSE

CONCLUSION

The boils are probably due to high piezometric gradients and velocities at exit from cavities and fractures in the rock foundation.

RECOMMENDATION

Install either an upstream blanket or cutoff, if one does not already exist. If it presently exists, it is in need of repair.

Information on these two remedial actions will be presented on the following screens.

Press the F7 key to PRINT this page.
Press the ENTER key to continue.

Do you wish to run DAMSEAL again?

Yes
==> No

Would you be willing to complete a simple form about your problem and return it to the Waterways Experiment Station?

No
==> Yes

Dam - ENID DAM
Division - Lower Mississippi Valley
District - Vicksburg
Dam construction - earth embankment
Dam ID Number - MS01495

Please describe the seepage or leakage problem you have been experiencing and what you have done to remedy the problem. Use additional pages if necessary.

Name -
Address -

Telephone number -
Date -
Please send the completed form to:

W. O. Miller
USAE Waterways Experiment Station
ATTN: CEWES-GS-R
3909 Halls Ferry Road
Vicksburg, MS 39180-6199
601/634-3147

THANK YOU FOR USING

THE

CORPS OF ENGINEERS

D A M S E A L

EXPERT SYSTEM

If you have any questions or comments please contact:

W. O. Miller
USAE Waterways Experiment Station
ATTN: CEWES-GS-R
3909 Halls Ferry Road
Vicksburg, MS 39180-6199
601/634-3147

Press the F7 key to PRINT this page.
Press the ENTER key to complete this consultation session.

PART IV: CONCLUSIONS AND RECOMMENDATIONS

40. The DAMSEAL expert system has fulfilled the two main objectives of this project. First, the Corps' previous expert system for water seepage was converted from Arity-prolog into the Level5 Expert System Shell and was given access to the existing Corps of Engineers seepage and dams databases. This change in delivery system corrected the user interface problems and provided a convenient procedure for accessing the existing seepage databases. Second, the DAMSEAL expert system now makes specific recommendations based on the user's input.

41. Annual maintenance (updating) of DAMSEAL will be necessary to document how seepage problems and experiences obtained for effective maintenance. The districts cooperation in returning completed data forms to WES is required.

42. Although the DAMSEAL expert system is now operative, there is one enhancement that would be useful to the districts. This enhancement lies in the area of recommended actions to the diagnosed problem. Presently, the system diagnoses a problem based on qualitative input information and makes qualitative recommended actions. The system should make site-specific recommendations. This level of sophistication would require more knowledge acquisition. However, it is important to note that this further enhancement would not affect the present architecture of DAMSEAL.

APPENDIX A

DAMSEAL KNOWLEDGE BASE PRINTOUT

```
TITLE  DAMSEAL
!
!      Shared Include File
!
$ SHAREFIL.PRL
!
OPEN seepage.dbf AS DB3 FOR READ CALLED seep
OPEN cdam.dbf    AS DB3 FOR READ CALLED alldams
!STRING Date of info1
!STRING Date of info2
!
INIT    counter := 1
AND       pages := 2
REINIT  counter := 1
AND       pages := 2
!
SUPPRESS ALL
GOALSELECT OFF
CONFIDENCE OFF
!
!MULTI Primary seepage manifestation
MULTI   Primary seepage manifestation known
!
!   GOALS
!
1.  Dam information located
    1.1  Primary seepage manifestation known
         1.1.1  Seek more information
!
RULE to display disclaimer
IF   PAINT COELOGO.PIC
AND  DISPLAY Logo
AND  DISPLAY Disclaimer
THEN Begin
!
RULE for checking information from database
IF   Number of previous problems = 1
!AND  DISPLAY database 1
AND  Type of dam user
AND  DISPLAY database 2
AND  DISPLAY database 3
THEN Dam data checked
AND  NOT No previous seepage
!
RULE for checking information from database
IF   Number of previous problems = 2
!AND  DISPLAY database 1
AND  Type of dam user
AND  DISPLAY database 2
AND  DISPLAY database 3
AND  DISPLAY database 4
THEN Dam data checked
```

```
AND  NOT No previous seepage
!
RULE for checking information from database
IF   Number of previous problems >= 3
AND  Recordno <> 98
!AND  DISPLAY database 1
AND  Type of dam user
AND  DISPLAY database 2
AND  DISPLAY database 3
AND  DISPLAY database 4
AND  DISPLAY database 5
THEN Dam data checked
AND  NOT No previous seepage
!
RULE for checking information from database
IF   Number of previous problems >= 3
AND  Recordno = 98
!AND  DISPLAY database 1
AND  Type of dam user
AND  DISPLAY database 2
AND  DISPLAY database 3
AND  DISPLAY database 4
THEN Dam data checked
AND  NOT No previous seepage
!
RULE to determine type of dam from user
IF   Type of dam IS earth embankment
THEN Type of dam user
!
RULE to determine type of dam from user
IF   Type of dam IS concrete or roller compacted concrete
THEN Type of dam user
!
RULE to determine type of dam from user
IF   Type of dam IS rockfilled
THEN Type of dam user
!
RULE to offer information from cdam database
IF   Display information from cdam database
THEN Cdam data
AND  DISPLAY cdam database 1
AND  DISPLAY cdam database 2
!
RULE to offer information from cdam database
IF   NOT Display information from cdam database
THEN Cdam data
!
RULE for identifying type of problem as boils
IF   Dam type known
AND  Dam data checked
AND  Cdam data
AND  DISPLAY Primary seepage instructions
```

```
AND  Primary seepage manifestation IS Boils
THEN Primary seepage manifestation known
AND  Seepage is related to boils
!
RULE for not identifying type of problem as boils
IF   Dam type known
AND  Dam data checked
AND  Cdam data
AND  NOT Primary seepage manifestation IS Boils
THEN Primary seepage manifestation known
AND  NOT Seepage is related to boils
!
RULE for identifying type of problem as damaged structures
IF   Dam type known
AND  Dam data checked
AND  Cdam data
AND   Primary seepage manifestation IS Evidence of damage to
appurtenant structures
THEN Primary seepage manifestation known
AND  Seepage is related to damaged structures
!
RULE for not identifying type of problem as damaged structures
IF   Dam type known
AND  Dam data checked
AND  Cdam data
AND   NOT Primary seepage manifestation IS Evidence of damage to
appurtenant structures
THEN Primary seepage manifestation known
AND  NOT Seepage is related to damaged structures
!
RULE for identifying type of problem as toe drainage
IF   Dam type known
AND  Dam data checked
AND  Cdam data
AND  Primary seepage manifestation IS Changes in flow rates in toe drainage
system
THEN Primary seepage manifestation known
AND  Seepage is related to flow rate changes
!
RULE for not identifying type of problem as toe drainage
IF   Dam type known
AND  Dam data checked
AND  Cdam data
AND  NOT Primary seepage manifestation IS Changes in flow rates in toe
drainage system
THEN Primary seepage manifestation known
AND  NOT Seepage is related to flow rate changes
!
RULE for identifying type of problem as piezometric readings
IF   Dam type known
AND  Dam data checked
AND  Cdam data
```

```
AND  Primary seepage manifestation IS Abnormally high piezometric readings
THEN Primary seepage manifestation known
AND  Seepage is related to piezometric readings
!
RULE for not identifying type of problem as piezometric readings
IF   Dam type known
AND  Dam data checked
AND  Cdam data
AND   NOT Primary seepage manifestation IS Abnormally high
piezometric readings
THEN Primary seepage manifestation known
AND  NOT Seepage is related to piezometric readings
!
RULE for identifying type of problem as holes
IF   Dam type known
AND  Dam data checked
AND  Cdam data
AND  Primary seepage manifestation IS Holes or depressions
THEN Primary seepage manifestation known
AND  Seepage is related to holes
!
RULE for not identifying type of problem as holes
IF   Dam type known
AND  Dam data checked
AND  Cdam data
AND  NOT Primary seepage manifestation IS Holes or depressions
THEN Primary seepage manifestation known
AND  NOT Seepage is related to holes
!
RULE for identifying type of problem as mass movement
IF   Dam type known
AND  Dam data checked
AND  Cdam data
AND  Primary seepage manifestation IS Signs of mass movement
THEN Primary seepage manifestation known
AND  Seepage is related to mass movement
!
RULE for not identifying type of problem as mass movement
IF   Dam type known
AND  Dam data checked
AND  Cdam data
AND  NOT Primary seepage manifestation IS Signs of mass movement
THEN Primary seepage manifestation known
AND  NOT Seepage is related to mass movement
!
RULE for identifying type of problem as turbid seepage
IF   Dam type known
AND  Dam data checked
AND  Cdam data
AND  Primary seepage manifestation IS Turbid seepage or seepage carrying
fines
THEN Primary seepage manifestation known
```

```
AND  Seepage is related to turbid seepage
!
RULE for not identifying type of problem as turbid seepage
IF   Dam type known
AND  Dam data checked
AND  Cdam data
AND   NOT Primary seepage manifestation IS Turbid seepage or seepage
carrying fines
THEN Primary seepage manifestation known
AND  NOT Seepage is related to turbid seepage
!
RULE for identifying type of problem as wet spots
IF   Dam type known
AND  Dam data checked
AND  Cdam data
AND  Primary seepage manifestation IS Wet, soft, or quick spots or marshy
areas
THEN Primary seepage manifestation known
AND  Seepage is related to wet spots
!
RULE for not identifying type of problem as wet spots
IF   Dam type known
AND  Dam data checked
AND  Cdam data
AND  NOT Primary seepage manifestation IS Wet, soft, or quick spots or
marshy areas
THEN Primary seepage manifestation known
AND  NOT Seepage is related to wet spots
!
RULE to chain to the next knowledge base
IF   Primary seepage manifestation known
THEN Seek more information
AND  FORGET  Embankment crack
AND  CHAIN DC.KNB
!
RULE to find information in databases
IF   Location of dam is known
AND  POSITION Recordno IN seep
AND  Number of previous problems := seep.totlprobno
AND  Construction of dam := seep.damtype
AND  Name of dam := seep.damname
AND  Problem description1 := seep.Descriptn1
AND  Problem description2 := seep.Descriptn2
AND  Problem description3 := seep.Descriptn3
AND  Quantity1 := seep.quantity1
AND  Quantity2 := seep.quantity2
AND  Quantity3 := seep.quantity3
AND  Rock foundation := seep.rockfoundn
AND  Rock condition := seep.rockcondn
AND  Soil foundation := seep.soilfoundn
AND  Soil type := seep.soiltype
AND  Geologic note := seep.geolognote
```

```
AND  Seepage design := seep.designseep
AND  Problem date1 := seep.pdates1
AND  Problem date2 := seep.pdates2
AND  Problem date3 := seep.pdates3
AND  Problem location1 := seep.location1
AND  Problem location2 := seep.location2
AND  Problem location3 := seep.location3
AND  Problem action11 := seep.factnnote1
AND  Problem action12 := seep.factnnote2
AND  Problem action21 := seep.sactnnote1
AND  Problem action22 := seep.sactnnote2
AND  Problem action31 := seep.tactnnote1
AND  Problem action32 := seep.tactnnote2
AND  Problem monitor11 := seep.fmonitor1
AND  Problem monitor12 := seep.fmonitor2
AND  Problem monitor21 := seep.smonitor1
AND  Problem monitor22 := seep.smonitor2
AND  Problem monitor31 := seep.tmonitor1
AND  Problem monitor32 := seep.tmonitor2
AND  Date of info1 := seep.lastupdate
AND  POSITION Alldams recordno IN alldams
AND  Dam ID := alldams.id
AND  State := alldams.state
AND  County := alldams.county
AND  Lake := alldams.lake
AND  River := alldams.river
AND  Hydraulic height := alldams.hydhgt
AND  Str height := alldams.strhgt
AND  Crest := alldams.crest
AND  Maximum capacity := alldams.maxcap
AND  Normal capacity := alldams.norcap
AND  Year completed := alldams.yearcmpl
AND  COE category := alldams.subcat
AND  Closest city := alldams.nearcity
AND  Distance := alldams.distance
AND  Population := alldams.population
AND  Number of locks := alldams.numlocks
AND  Seismic rating := alldams.seismic
AND  Spillway width := alldams.spillwid
AND  Spillway discharge := alldams.spilldis
AND  Volume of material := alldams.volmat
AND  Hazardcode := alldams.hazardcode
AND  Purpose := alldams.purpose
AND  Type := alldams.type
AND  Spillway type := alldams.spilltype
AND  Date of info2 := alldams.updtdate
AND  Hazard code defined
AND  Purpose defined
AND  Type defined
AND  Year defined
AND  Year defined1
AND  Spillway type defined
```

```
THEN Dam information located
!
RULE to define hazardcodes
IF   Hazardcode = 1
THEN Hazard code defined
AND  Potential hazard := High
!
RULE to define hazardcodes
IF   Hazardcode = 2
THEN Hazard code defined
AND  Potential hazard := Significant
!
RULE to define hazardcodes
IF   Hazardcode = 3
THEN Hazard code defined
AND  Potential hazard := Low
!
RULE to define hazardcodes
IF   Hazardcode = ""
THEN Hazard code defined
AND  Potential hazard := Unknown
!
RULE to define year
IF   "19800000" < Date of infol
AND  Date of infol < "19810000"
THEN Year definedl
AND  FORGET Date of infol
AND  Date of infol := 1980
!
RULE to define year
IF   "19810000" < Date of infol
AND  Date of infol < "19820000"
THEN Year definedl
AND  FORGET Date of infol
AND  Date of infol := 1981
!
RULE to define year
IF   "19820000" < Date of infol
AND  Date of infol < "19830000"
THEN Year definedl
AND  FORGET Date of infol
AND  Date of infol := 1982
!
RULE to define year
IF   "19830000" < Date of infol
AND  Date of infol < "19840000"
THEN Year definedl
AND  FORGET Date of infol
AND  Date of infol := 1983
!
RULE to define year
IF   "19840000" < Date of infol
```

```
AND  Date of info1 < "19850000"
THEN Year defined1
AND  FORGET Date of info1
AND  Date of info1 := 1984
!
RULE to define year
IF   "19850000" < Date of info1
AND  Date of info1 < "19860000"
THEN Year defined1
AND  FORGET Date of info1
AND  Date of info1 := 1985
!
RULE to define year
IF   "19860000" < Date of info1
AND  Date of info1 < "19870000"
THEN Year defined1
AND  FORGET Date of info1
AND  Date of info1 := 1986
!
RULE to define year
IF   "19870000" < Date of info1
AND  Date of info1 < "19880000"
THEN Year defined1
AND  FORGET Date of info1
AND  Date of info1 := 1987
!
RULE to define year
IF   "19880000" < Date of info1
AND   Date of info1 < "19890000"
THEN Year defined1
AND  FORGET Date of info1
AND  Date of info1 := 1988
!
RULE to define year
IF   "19890000" < Date of info1
AND  Date of info1 < "19900000"
THEN Year defined1
AND  FORGET Date of info1
AND  Date of info1 := 1989
!
RULE to define year
IF   "19800000" < Date of info2
AND  Date of info2 < "19810000"
THEN Year defined
AND  FORGET Date of info2
AND  Date of info2 := 1980
!
RULE to define year
IF   "19810000" < Date of info2
AND  Date of info2 < "19820000"
THEN Year defined
AND  FORGET Date of info2
```

```
AND  Date of info2 := 1981
!
RULE to define year
IF   "19820000" < Date of info2
AND  Date of info2 < "19830000"
THEN Year defined
AND  FORGET Date of info2
AND  Date of info2 := 1982
!
RULE to define year
IF   "19830000" < Date of info2
AND  Date of info2 < "19840000"
THEN Year defined
AND  FORGET Date of info2
AND  Date of info2 := 1983
!
RULE to define year
IF   "19840000" < Date of info2
AND  Date of info2 < "19850000"
THEN Year defined
AND  FORGET Date of info2
AND  Date of info2 := 1984
!
RULE to define year
IF   "19850000" < Date of info2
AND  Date of info2 < "19860000"
THEN Year defined
AND  FORGET Date of info2
AND  Date of info2 := 1985
!
RULE to define year
IF   "19860000" < Date of info2
AND  Date of info2 < "19870000"
THEN Year defined
AND  FORGET Date of info2
AND  Date of info2 := 1986
!
RULE to define year
IF   "19870000" < Date of info2
AND  Date of info2 < "19880000"
THEN Year defined
AND  FORGET Date of info2
AND  Date of info2 := 1987
!
RULE to define year
IF   "19880000" < Date of info2
AND   Date of info2 < "19890000"
THEN Year defined
AND  FORGET Date of info2
AND  Date of info2 := 1988
!
RULE to define year
```

```
IF   "19890000" < Date of info2
AND  Date of info2 < "19900000"
THEN Year defined
AND  FORGET Date of info2
AND  Date of info2 := 1989
!
RULE to define spillway types
IF   Spillway type = U
THEN Spillway type defined
AND  Spillway is := Uncontrolled
!
RULE to define spillway types
IF   Spillway type = C
THEN Spillway type defined
AND  Spillway is := Controlled
!
RULE to define spillway types
IF   Spillway type = N
THEN Spillway type defined
AND  Spillway is := None
!
RULE to define spillway types
IF   Spillway type = ""
THEN Spillway type defined
AND  Spillway is := Unknown
!
RULE to define purpose
IF   Purpose = I
THEN Purpose defined
AND  Purpose is := Irrigation
!
RULE to define purpose
IF   Purpose = H
THEN Purpose defined
AND  Purpose is := Hydroelectric
!
RULE to define purpose
IF   Purpose = C
THEN Purpose defined
AND  Purpose is := Flood control
!
RULE to define purpose
IF   Purpose = N
THEN Purpose defined
AND  Purpose is := Navigation
!
RULE to define purpose
IF   Purpose = S
THEN Purpose defined
AND  Purpose is := Water supply
!
RULE to define purpose
```

```
IF   Purpose = R
THEN Purpose defined
AND  Purpose is := Recreation
!
RULE to define purpose
IF   Purpose = P
THEN Purpose defined
AND  Purpose is := Farm pond
!
RULE to define purpose
IF   Purpose = D
THEN Purpose defined
AND  Purpose is := Debris control
!
RULE to define purpose
IF   Purpose = O
THEN Purpose defined
AND  Purpose is := Other
!
RULE to define purpose
IF   Purpose = CC
THEN Purpose defined
AND  Purpose is := Flood control
!
RULE to define purpose
IF   Purpose = CD
THEN Purpose defined
AND  Purpose is := Flood and debris control
!
RULE to define purpose
IF   Purpose = CD
THEN Purpose defined
AND  Purpose is := Flood and debris control, recreation
!
RULE to define purpose
IF   Purpose = CH
OR   Purpose = HC
THEN Purpose defined
AND  Purpose is := Flood control, hydroelectric
!
RULE to define purpose
IF   Purpose = CHN
THEN Purpose defined
AND  Purpose is := Flood control, hydroelectric, navigation
!
RULE to define purpose
IF   Purpose = CHINR
THEN Purpose defined
AND   Purpose is := Flood control, hydroelectric, irrigation,
navigation, other
!
RULE to define purpose
```

```
IF   Purpose = CHINRSO
OR   Purpose = HCIRNSO
OR   Purpose = CHISRNO
OR   Purpose = ISHCNRO
THEN Purpose defined
AND  Purpose is := Flood control, hydroelec, irrigation,
navigation, water sup
!
RULE to define purpose
IF   Purpose = CHSR
OR   Purpose = CSRH
OR   Purpose = SCHR
THEN Purpose defined
AND  Purpose is := Flood control, hydroelectric, water supply,
recreation
!
RULE to define purpose
IF   Purpose = CHRO
OR   Purpose = OHRC
THEN Purpose defined
AND  Purpose is := Flood control, hydroelectric, recreation, other
!
RULE to define purpose
IF   Purpose = CI
THEN Purpose defined
AND  Purpose is := Flood control, irrigation
!
RULE to define purpose
IF   Purpose = CDR
THEN Purpose defined
AND  Purpose is := Flood and debris control, recreation
!
RULE to define purpose
IF   Purpose = CIR
OR   Purpose = CRI
OR   Purpose = ICR
THEN Purpose defined
AND  Purpose is := Flood control, irrigation, recreation
!
RULE to define purpose
IF   Purpose = CIHR
OR   Purpose = CIRH
THEN Purpose defined
AND  Purpose is := Flood control, irrigation, hydroelectric,
recreation
!
RULE to define purpose
IF   Purpose = CIRD
THEN Purpose defined
AND  Purpose is := Flood control, irrigation, recreation, debris        control
!
RULE to define purpose
```

```
IF   Purpose = CIRO
THEN Purpose defined
AND  Purpose is := Flood control, irrigation, recreation, other
!
RULE to define purpose
IF   Purpose = CIS
THEN Purpose defined
AND  Purpose is := Flood control, irrigation, water supply
!
RULE to define purpose
IF   Purpose = CINRO
THEN Purpose defined
AND   Purpose is := Flood control, irrigation, navigation,
recreation, other
!
RULE to define purpose
IF   Purpose = CINHRO
OR   Purpose = HCRINO
OR   Purpose = CHRINO
THEN Purpose defined
AND   Purpose is := Flood control, irrigation, navigation,
hydroelec, recreation
!
RULE to define purpose
IF   Purpose = CISRO
THEN Purpose defined
AND   Purpose is := Flood control, irrigation, water supply,
recreation, other
!
RULE to define purpose
IF   Purpose = CRIOS
THEN Purpose defined
AND  Purpose is := Flood control, irrigation, recreation, water        supply,
other
!
RULE to define purpose
IF   Purpose = CO
THEN Purpose defined
AND  Purpose is := Flood control, other
!
RULE to define purpose
IF   Purpose = CNRSO
THEN Purpose defined
AND  Purpose is := Flood control, navigation, recreation, water        supply,
other
!
RULE to define purpose
IF   Purpose = CR
OR   Purpose = RC
THEN Purpose defined
AND  Purpose is := Flood control, recreation
!
```

```
RULE to define purpose
IF   Purpose = CRH
OR   Purpose = HCR
OR   Purpose = CHR
OR   Purpose = HRC
THEN Purpose defined
AND  Purpose is := Flood control, recreation, hydroelectric
!
RULE to define purpose
IF   Purpose = CRN
OR   Purpose = CNR
OR   Purpose = NCR
THEN Purpose defined
AND  Purpose is := Flood control, recreation, navigation
!
RULE to define purpose
IF   Purpose = CRO
THEN Purpose defined
AND  Purpose is := Flood control, recreation, other
!
RULE to define purpose
IF   Purpose = CS
THEN Purpose defined
AND  Purpose is := Flood control, water supply
!
RULE to define purpose
IF   Purpose = CSN
THEN Purpose defined
AND  Purpose is := Flood control, water supply, navigation
!
RULE to define purpose
IF   Purpose = CSHN
THEN Purpose defined
AND   Purpose is := Flood control, water supply, hydroelectric,
navigation
!
RULE to define purpose
IF   Purpose = CSHO
THEN Purpose defined
AND  Purpose is := Flood control, water supply, hydroelectric,          other
!
RULE to define purpose
IF   Purpose = CSHNO
THEN Purpose defined
AND   Purpose is := Flood control, water supply, hydroelectric,
navigation
!
RULE to define purpose
IF   Purpose = CSR
OR   Purpose = CRS
OR   Purpose = SRC
OR   Purpose = SCR
```

```
THEN Purpose defined
AND  Purpose is := Flood control, water supply, recreation
!
RULE to define purpose
IF   Purpose = CSO
OR   Purpose = COS
THEN Purpose defined
AND  Purpose is := Flood control, water supply, other
!
RULE to define purpose
IF   Purpose = CSRO
OR   Purpose = CRSO
THEN Purpose defined
AND  Purpose is := Flood control, water supply, recreation, other
!
RULE to define purpose
IF   Purpose = CSNR
OR   Purpose = CNRS
OR   Purpose = NCSR
THEN Purpose defined
AND   Purpose is := Flood control, water supply, recreation,
navigation
!
RULE to define purpose
IF   Purpose = DR
THEN Purpose defined
AND  Purpose is := Debris control, recreation
!
RULE to define purpose
IF   Purpose = DHR
THEN Purpose defined
AND  Purpose is := Debris control, hydroelectric, recreation
!
RULE to define purpose
IF   Purpose = HCSRO
OR   Purpose = CRHSO
THEN Purpose defined
AND   Purpose is := Hydroelectric, flood control, water supply,
recreation
!
RULE to define purpose
IF   Purpose = HCNR
OR   Purpose = HNCR
OR   Purpose = CHNR
OR   Purpose = NHRC
OR   Purpose = CNHR
THEN Purpose defined
AND  Purpose is := Hydroelectric, flood control, navigation,          recreation
!
RULE to define purpose
IF   Purpose = HO
THEN Purpose defined
```

```
AND  Purpose is := Hydroelectric, other
!
RULE to define purpose
IF   Purpose = HR
THEN Purpose defined
AND  Purpose is := Hydroelectric, recreation
!
RULE to define purpose
IF   Purpose = HNRI
THEN Purpose defined
AND   Purpose is := Hydroelectric, navigation, recreation,
irrigation
!
RULE to define purpose
IF   Purpose = HOR
THEN Purpose defined
AND  Purpose is := Hydroelectric, other, recreation
!
RULE to define purpose
IF   Purpose = HNR
OR   Purpose = RHN
OR   Purpose = NHR
THEN Purpose defined
AND  Purpose is := Hydroelectric, navigation, recreation
!
RULE to define purpose
IF   Purpose = NC
THEN Purpose defined
AND  Purpose is := Navigation, flood control
!
RULE to define purpose
IF   Purpose = NH
OR   Purpose = HN
THEN Purpose defined
AND  Purpose is := Navigation, hydroelectric
!
RULE to define purpose
IF   Purpose = NRCSH
THEN Purpose defined
AND  Purpose is := Navigation, recreation, flood cont, water          supply,
hydroelectric
!
RULE to define purpose
IF   Purpose = NCSH
THEN Purpose defined
AND   Purpose is := Navigation, flood control, water supply,
hydroelectric
!
RULE to define purpose
IF   Purpose = NR
THEN Purpose defined
AND  Purpose is := Navigation, recreation
```

```
!
RULE to define purpose
IF   Purpose = NOR
THEN Purpose defined
AND  Purpose is := Navigation, other, recreation
!
RULE to define purpose
IF   Purpose = NRS
THEN Purpose defined
AND  Purpose is := Navigation, recreation, water supply
!
RULE to define purpose
IF   Purpose = NI
THEN Purpose defined
AND  Purpose is := Navigation, irrigation
!
RULE to define purpose
IF   Purpose = NOCRF
THEN Purpose defined
AND  Purpose is := Navigation, other, flood control, recreation
!
RULE to define purpose
IF   Purpose = RO
THEN Purpose defined
AND  Purpose is := Recreation, other
!
RULE to define purpose
IF   Purpose = SR
THEN Purpose defined
AND  Purpose is := Water supply, recreation
!
RULE to define purpose
IF   Purpose = SRO
OR   Purpose = OSR
THEN Purpose defined
AND  Purpose is := Water supply, recreation, other
!
RULE to define purpose
IF   Purpose = SIR
OR   Purpose = IRS
THEN Purpose defined
AND  Purpose is := Water supply, irrigation, recreation
!
RULE to define purpose
IF   Purpose = U
OR   Purpose = ""
THEN Purpose defined
AND  Purpose is := Unknown
!
RULE to define type
IF   Type = ""
THEN Type defined
```

```
AND  Type is := UNKNOWN
!
RULE to define type
IF   Type = RE
THEN Type defined
AND  Type is := EARTH
!
RULE to define type
IF   Type = REPG
OR   Type = PGRE
THEN Type defined
AND  Type is := EARTH, GRAVITY
!
RULE to define type
IF   Type = REOT
OR   Type = OTRE
THEN Type defined
AND  Type is := EARTH, OTHER
!
RULE to define type
IF   Type = ER
THEN Type defined
AND  Type is := ROCKFILL
!
RULE to define type
IF   Type = ERREPG
OR   Type = REERPG
OR   Type = PGERRE
OR   Type = PGREER
THEN Type defined
AND  Type is := ROCKFILLED, EARTH, GRAVITY
!
RULE to define type
IF   Type = ERRE
OR   Type = REER
THEN Type defined
AND  Type is := ROCKFILLED, EARTH
!
RULE to define type
IF   Type = PGER
THEN Type defined
AND  Type is := ROCKFILLED, GRAVITY
!
RULE to define type
IF   Type = PG
THEN Type defined
AND  Type is := GRAVITY
!
RULE to define type
IF   Type = CB
THEN Type defined
AND  Type is := BUTTRESS
```

```
!
RULE to define type
IF   Type = VA
THEN Type defined
AND  Type is := ARCH
!
RULE to define type
IF   Type = MV
THEN Type defined
AND  Type is := MULTIARCH
!
RULE to define type
IF   Type = OT
THEN Type defined
AND  Type is := OTHER
!
RULE to define type
IF   Type = PGOT
OR   Type = OTPG
THEN Type defined
AND  Type is := OTHER, GRAVITY
!
RULE for location of dam within Lower Mississippi Valley Division
IF   Begin
AND  Division = 1
AND  LMV District IS Memphis
THEN Location of dam is known
AND  Division name := Lower Mississippi Valley
AND  District name := "Memphis"
AND  Division abbreviation := LMV
AND  District abbreviation := LMM
AND  No previous seepage
AND  CHAIN DU.KNB
!
RULE for location of dam within Lower Mississippi Valley Division
IF   Division = 1
AND  LMV District IS New Orleans
THEN Location of dam is known
AND  DISPLAY no dams in this district located in database
AND  Division name := Lower Mississippi Valley
AND  District name := "New Orleans"
AND  Division abbreviation := LMV
AND  District abbreviation := LMN
AND  No previous seepage
AND  CHAIN DU.KNB
!
RULE for location of dam within Lower Mississippi Valley Division
IF   Division = 1
AND  LMV District IS St. Louis
AND  LMS Dam IS Carlyle Lake Dam
THEN Location of dam is known
AND  Division name := Lower Mississippi Valley
```

```
AND  District name := "St. Louis"
AND  Division abbreviation := LMV
AND  District abbreviation := LMS
AND  Recordno := 1
AND  Alldams recordno := 27
!
RULE for location of dam within Lower Mississippi Valley Division
IF   Division = 1
AND  LMV District IS St. Louis
AND  LMS Dam IS Lake Shelbyville Dam
THEN Location of dam is known
AND  Division name := Lower Mississippi Valley
AND  District name := "St. Louis"
AND  Division abbreviation := LMV
AND  District abbreviation := LMS
AND  Recordno := 2
AND  Alldams recordno := 29
!
RULE for location of dam within Lower Mississippi Valley Division
IF   Division = 1
AND  LMV District IS St. Louis
AND  LMS Dam IS Not listed
THEN Location of dam is known
AND  Division name := Lower Mississippi Valley
AND  District name := "St. Louis"
AND  Division abbreviation := LMV
AND  District abbreviation := LMS
AND  No previous seepage
AND  CHAIN DU.KNB
!
RULE for location of dam within Lower Mississippi Valley Division
IF   Division = 1
AND  LMV District IS Vicksburg
AND  LMK Dam IS Enid Dam
THEN Location of dam is known
AND  Division name := Lower Mississippi Valley
AND  District name := "Vicksburg"
AND  Division abbreviation := LMV
AND  District abbreviation := LMK
AND  Recordno := 3
AND  Alldams recordno := 11
!
RULE for location of dam within Lower Mississippi Valley Division
IF   Division = 1
AND  LMV District IS Vicksburg
AND  LMK Dam IS Grenada Dam
THEN Location of dam is known
AND  Division name := Lower Mississippi Valley
AND  District name := "Vicksburg"
AND  Division abbreviation := LMV
AND  District abbreviation := LMK
AND  Recordno := 98
```

```
AND  Alldams recordno := 12
!
RULE for location of dam within Lower Mississippi Valley Division
IF   Division = 1
AND  LMV District IS Vicksburg
AND  LMK Dam IS Sardis Dam
THEN Location of dam is known
AND  Division name := Lower Mississippi Valley
AND  District name := "Vicksburg"
AND  Division abbreviation := LMV
AND  District abbreviation := LMK
AND  Recordno := 99
AND  Alldams recordno := 21
!
RULE for location of dam within Lower Mississippi Valley Division
IF   Division = 1
AND  LMV District IS Vicksburg
AND  LMK Dam IS Not listed
THEN Location of dam is known
AND  Division name := Lower Mississippi Valley
AND  District name := "Vicksburg"
AND  Division abbreviation := LMV
AND  District abbreviation := LMK
AND  No previous seepage
AND  CHAIN DU.KNB
!
RULE for location of dam within Missouri River Division
IF   Division = 2
AND  MRD District IS Kansas City
THEN Location of dam is known
AND  DISPLAY no dams in this district located in database
AND  Division name := Missouri River Division
AND  District name := "Kansas City"
AND  Division abbreviation := MRD
AND  District abbreviation := MRK
AND  No previous seepage
AND  CHAIN DU.KNB
!
RULE for location of dam within Missouri River Division
IF   Division = 2
AND  MRD District IS Omaha
AND  MRO Dam IS Big Bend Dam
THEN Location of dam is known
AND  Division name := Missouri River Division
AND  District name := "Omaha"
AND  Division abbreviation := MRD
AND  District abbreviation := MRO
AND  Recordno := 67
AND  Alldams recordno := 53
!
RULE for location of dam within Missouri River Division
IF   Division = 2
```

```
AND  MRD District IS Omaha
AND  MRO Dam IS Bowman Haley Dam
THEN Location of dam is known
AND  Division name := Missouri River Division
AND  District name := "Omaha"
AND  Division abbreviation := MRD
AND  District abbreviation := MRO
AND  Recordno := 62
AND  Alldams recordno := 55
!
RULE for location of dam within Missouri River Division
IF   Division = 2
AND  MRD District IS Omaha
AND  MRO Dam IS Branched Oak Dam
THEN Location of dam is known
AND  Division name := Missouri River Division
AND  District name := "Omaha"
AND  Division abbreviation := MRD
AND  District abbreviation := MRO
AND  Recordno := 68
AND  Alldams recordno := 56
!
RULE for location of dam within Missouri River Division
IF   Division = 2
AND  MRD District IS Omaha
AND  MRO Dam IS Cold Brook Dam
THEN Location of dam is known
AND  Division name := Missouri River Division
AND  District name := "Omaha"
AND  Division abbreviation := MRD
AND  District abbreviation := MRO
AND  Recordno := 4
AND  Alldams recordno := 61
!
RULE for location of dam within Missouri River Division
IF   Division = 2
AND  MRD District IS Omaha
AND  MRO Dam IS Fort Peck Dam
THEN Location of dam is known
AND  Division name := Missouri River Division
AND  District name := "Omaha"
AND  Division abbreviation := MRD
AND  District abbreviation := MRO
AND  Recordno := 69
AND  Alldams recordno := 64
!
RULE for location of dam within Missouri River Division
IF   Division = 2
AND  MRD District IS Omaha
AND  MRO Dam IS Fort Randall Dam
THEN Location of dam is known
AND  Division name := Missouri River Division
```

```
AND  District name := "Omaha"
AND  Division abbreviation := MRD
AND  District abbreviation := MRO
AND  Recordno := 5
AND  Alldams recordno := 65
!
RULE for location of dam within Missouri River Division
IF   Division = 2
AND  MRD District IS Omaha
AND  MRO Dam IS Garrison Dam
THEN Location of dam is known
AND  Division name := Missouri River Division
AND  District name := "Omaha"
AND  Division abbreviation := MRD
AND  District abbreviation := MRO
AND  Recordno := 100
AND  Alldams recordno := 66
!
RULE for location of dam within Missouri River Division
IF   Division = 2
AND  MRD District IS Omaha
AND  MRO Dam IS Pawnee Dam
THEN Location of dam is known
AND  Division name := Missouri River Division
AND  District name := "Omaha"
AND  Division abbreviation := MRD
AND  District abbreviation := MRO
AND  Recordno := 70
AND  Alldams recordno := 72
!
RULE for location of dam within Missouri River Division
IF   Division = 2
AND  MRD District IS Omaha
AND  MRO Dam IS Pipestem Dam
THEN Location of dam is known
AND  Division name := Missouri River Division
AND  District name := "Omaha"
AND  Division abbreviation := MRD
AND  District abbreviation := MRO
AND  Recordno := 63
AND  Alldams recordno := 73
!
RULE for location of dam within Missouri River Division
IF   Division = 2
AND  MRD District IS Omaha
AND  MRO Dam IS Yankee Hill Dam
THEN Location of dam is known
AND  Division name := Missouri River Division
AND  District name := "Omaha"
AND  Division abbreviation := MRD
AND  District abbreviation := MRO
AND  Recordno := 71
```

```
AND  Alldams recordno := 82
!
RULE for location of dam within Missouri River Division
IF   Division = 2
AND  MRD District IS Omaha
AND  MRO Dam IS Not listed
THEN Location of dam is known
AND  Division name := Missouri River Division
AND  District name := "Omaha"
AND  Division abbreviation := MRD
AND  District abbreviation := MRO
AND  No previous seepage
AND  CHAIN DU.KNB
!
RULE for location of dam within New England Division
IF   Division = 3
AND  NED District IS New England
AND  NED Dam IS Hodges Village Dam
THEN Location of dam is known
AND  Division name := New England Division
AND  District name := "New England"
AND  Division abbreviation := NED
AND  District abbreviation := NED
AND  Recordno := 6
AND  Alldams recordno := 179
!
RULE for location of dam within New England Division
IF   Division = 3
AND  NED District IS New England
AND  NED Dam IS Hop Brook Dam
THEN Location of dam is known
AND  Division name := New England Division
AND  District name := "New England"
AND  Division abbreviation := NED
AND  District abbreviation := NED
AND  Recordno := 8
AND  Alldams recordno := 180
!
RULE for location of dam within New England Division
IF   Division = 3
AND  NED District IS New England
AND  NED Dam IS Mansfield Hollow Dam
THEN Location of dam is known
AND  Division name := New England Division
AND  District name := "New England"
AND  Division abbreviation := NED
AND  District abbreviation := NED
AND  Recordno := 7
AND  Alldams recordno := 185
!
RULE for location of dam within New England Division
IF   Division = 3
```

```
AND  NED District IS New England
AND  NED Dam IS North Springfield Dam
THEN Location of dam is known
AND  Division name := New England Division
AND  District name := "New England"
AND  Division abbreviation := NED
AND  District abbreviation := NED
AND  Recordno := 64
AND  Alldams recordno := 187
!
RULE for location of dam within New England Division
IF   Division = 3
AND  NED District IS New England
AND  NED Dam IS Thomaston Dam
THEN Location of dam is known
AND  Division name := New England Division
AND  District name := "New England"
AND  Division abbreviation := NED
AND  District abbreviation := NED
AND  Recordno := 9
AND  Alldams recordno := 192
!
RULE for location of dam within New England Division
IF   Division = 3
AND  NED District IS New England
AND  NED Dam IS Townshend Dam
THEN Location of dam is known
AND  Division name := New England Division
AND  District name := "New England"
AND  Division abbreviation := NED
AND  District abbreviation := NED
AND  Recordno := 65
AND  Alldams recordno := 193
!
RULE for location of dam within New England Division
IF   Division = 3
AND  NED District IS New England
AND  NED Dam IS West Hill Dam
THEN Location of dam is known
AND  Division name := New England Division
AND  District name := "New England"
AND  Division abbreviation := NED
AND  District abbreviation := NED
AND  Recordno := 10
AND  Alldams recordno := 196
!
RULE for location of dam within New England Division
IF   Division = 3
AND  NED District IS New England
AND  NED Dam IS Not listed
THEN Location of dam is known
AND  Division name := New England Division
```

```
AND  District name := "New England"
AND  Division abbreviation := NED
AND  District abbreviation := NED
AND  No previous seepage
AND  CHAIN DU.KNB
!
RULE for location of dam within North Atlantic Division
IF   Division = 4
AND  NAD District IS Baltimore
AND  NAB Dam IS Alvin R. Bush Dam
THEN Location of dam is known
AND  Division name := North Atlantic Division
AND  District name := "Baltimore"
AND  Division abbreviation := NAD
AND  District abbreviation := NAB
AND  Recordno := 72
AND  Alldams recordno := 83
!
RULE for location of dam within North Atlantic Division
IF   Division = 4
AND  NAD District IS Baltimore
AND  NAB Dam IS Curwensville Dam
THEN Location of dam is known
AND  Division name := North Atlantic Division
AND  District name := "Baltimore"
AND  Division abbreviation := NAD
AND  District abbreviation := NAB
AND  Recordno := 66
AND  Alldams recordno := 88
!
RULE for location of dam within North Atlantic Division
IF   Division = 4
AND  NAD District IS Baltimore
AND  NAB Dam IS Hammond Dam
THEN Location of dam is known
AND  Division name := North Atlantic Division
AND  District name := "Baltimore"
AND  Division abbreviation := NAD
AND  District abbreviation := NAB
AND  Recordno := 11
AND  Alldams recordno := 90
!
RULE for location of dam within North Atlantic Division
IF   Division = 4
AND  NAD District IS Baltimore
AND  NAB Dam IS Not listed
THEN Location of dam is known
AND  Division name := North Atlantic Division
AND  District name := "Baltimore"
AND  Division abbreviation := NAD
AND  District abbreviation := NAB
AND  No previous seepage
```

```
!
RULE for location of dam within Ohio River Division
IF   Division = 7
AND  ORD District IS Huntington
AND  ORH Dam IS Pleasant Hill Dam
THEN Location of dam is known
AND  Division name := Ohio River Division
AND  District name := "Huntington"
AND  Division abbreviation := ORD
AND  District abbreviation := ORH
AND  Recordno := 35
AND  Alldams recordno := 265
!
RULE for location of dam within Ohio River Division
IF   Division = 7
AND  ORD District IS Huntington
AND  ORH Dam IS Senecaville Dam
THEN Location of dam is known
AND  Division name := Ohio River Division
AND  District name := "Huntington"
AND  Division abbreviation := ORD
AND  District abbreviation := ORH
AND  Recordno := 85
AND  Alldams recordno := 268
!
RULE for location of dam within Ohio River Division
IF   Division = 7
AND  ORD District IS Huntington
AND  ORH Dam IS Tappan Dam
THEN Location of dam is known
AND  Division name := Ohio River Division
AND  District name := "Huntington"
AND  Division abbreviation := ORD
AND  District abbreviation := ORH
AND  Recordno := 86
AND  Alldams recordno := 271
!
RULE for location of dam within Ohio River Division
IF   Division = 7
AND  ORD District IS Huntington
AND  ORH Dam IS Wills Creek Dam
THEN Location of dam is known
AND  Division name := Ohio River Division
AND  District name := "Huntington"
AND  Division abbreviation := ORD
AND  District abbreviation := ORH
AND  Recordno := 36
AND  Alldams recordno := 274
!
RULE for location of dam within Ohio River Division
IF   Division = 7
AND  ORD District IS Huntington
```

```
AND  ORH Dam IS Not listed
THEN Location of dam is known
AND  Division name := Ohio River Division
AND  District name := "Huntington"
AND  Division abbreviation := ORD
AND  District abbreviation := ORH
AND  No previous seepage
AND  CHAIN DU.KNB
!
RULE for location of dam within Ohio River Division
IF   Division = 7
AND  ORD District IS Louisville
AND  ORL Dam IS Caesar Creek Lake Dam
THEN Location of dam is known
AND  Division name := Ohio River Division
AND  District name := "Louisville"
AND  Division abbreviation := ORD
AND  District abbreviation := ORL
AND  Recordno := 37
AND  Alldams recordno := 279
!
RULE for location of dam within Ohio River Division
IF   Division = 7
AND  ORD District IS Louisville
AND  ORL Dam IS Cecil M. Harden Lake Dam
THEN Location of dam is known
AND  Division name := Ohio River Division
AND  District name := "Louisville"
AND  Division abbreviation := ORD
AND  District abbreviation := ORL
AND  Recordno := 87
AND  Alldams recordno := 284
!
RULE for location of dam within Ohio River Division
IF   Division = 7
AND  ORD District IS Louisville
AND  ORL Dam IS Mississinewa Lake Dam
THEN Location of dam is known
AND  Division name := Ohio River Division
AND  District name := "Louisville"
AND  Division abbreviation := ORD
AND  District abbreviation := ORL
AND  Recordno := 88
AND  Alldams recordno := 310
!
RULE for location of dam within Ohio River Division
IF   Division = 7
AND  ORD District IS Louisville
AND  ORL Dam IS William H. Harsha Lake Dam
THEN Location of dam is known
AND  Division name := Ohio River Division
AND  District name := "Louisville"
```

```
AND  Division abbreviation := ORD
AND  District abbreviation := ORL
AND  Recordno := 109
AND  Alldams recordno := 286
!
RULE for location of dam within Ohio River Division
IF   Division = 7
AND  ORD District IS Louisville
AND  ORL Dam IS Not listed
THEN Location of dam is known
AND  Division name := Ohio River Division
AND  District name := "Louisville"
AND  Division abbreviation := ORD
AND  District abbreviation := ORL
AND  No previous seepage
AND  CHAIN DU.KNB
!
RULE for location of dam within Ohio River Division
IF   Division = 7
AND  ORD District IS Nashville
AND  ORN Dam IS Center Hill Dam
THEN Location of dam is known
AND  Division name := Ohio River Division
AND  District name := "Nashville"
AND  Division abbreviation := ORD
AND  District abbreviation := ORN
AND  Recordno := 110
AND  Alldams recordno := 322
!
RULE for location of dam within Ohio River Division
IF   Division = 7
AND  ORD District IS Nashville
AND  ORN Dam IS Wolf Creek Dam
THEN Location of dam is known
AND  Division name := Ohio River Division
AND  District name := "Nashville"
AND  Division abbreviation := ORD
AND  District abbreviation := ORN
AND  Recordno := 39
AND  Alldams recordno := 331
!
RULE for location of dam within Ohio River Division
IF   Division = 7
AND  ORD District IS Nashville
AND  ORN Dam IS Not listed
THEN Location of dam is known
AND  Division name := Ohio River Division
AND  District name := "Nashville"
AND  Division abbreviation := ORD
AND  District abbreviation := ORN
AND  No previous seepage
AND  CHAIN DU.KNB
```

```
!
RULE for location of dam within Ohio River Division
IF   Division = 7
AND  ORD District IS Pittsburgh
AND  ORP Dam IS East Branch Dam
THEN Location of dam is known
AND  Division name := Ohio River Division
AND  District name := "Pittsburgh"
AND  Division abbreviation := ORD
AND  District abbreviation := ORP
AND  Recordno := 50
AND  Alldams recordno := 343
!
RULE for location of dam within Ohio River Division
IF   Division = 7
AND  ORD District IS Pittsburgh
AND  ORP Dam IS Not listed
THEN Location of dam is known
AND  Division name := Ohio River Division
AND  District name := "Pittsburgh"
AND  Division abbreviation := ORD
AND  District abbreviation := ORP
AND  No previous seepage
AND  CHAIN DU.KNB
!
RULE for location of dam within Pacific Ocean Division
IF   Division = 8
AND  POD District IS Far East
THEN Location of dam is known
AND  Division name := Pacific Ocean Division
AND  District name := "Far East"
AND  Division abbreviation := POD
AND  District abbreviation := POF
AND  No previous seepage
AND  CHAIN DU.KNB
!
RULE for location of dam within Pacific Ocean Division
IF   Division = 8
AND  POD District IS Honolulu
AND  POH Dam IS Kaneohe Dam
THEN Location of dam is known
AND  Division name := Pacific Ocean Division
AND  District name := "Honolulu"
AND  Division abbreviation := POD
AND  District abbreviation := POH
AND  Recordno := 40
AND  Alldams recordno := 369
!
RULE for location of dam within Pacific Ocean Division
IF   Division = 8
AND  POD District IS Honolulu
AND  POH Dam IS Ku Tree Reservoir Dam
```

```
THEN Location of dam is known
AND  Division name := Pacific Ocean Division
AND  District name := "Honolulu"
AND  Division abbreviation := POD
AND  District abbreviation := POH
AND  Recordno := 38
AND  Alldams recordno := 709
!
RULE for location of dam within Pacific Ocean Division
IF   Division = 8
AND  POD District IS Honolulu
AND  POH Dam IS Not listed
THEN Location of dam is known
AND  Division name := Pacific Ocean Division
AND  District name := "Honolulu"
AND  Division abbreviation := POD
AND  District abbreviation := POH
AND  No previous seepage
AND  CHAIN DU.KNB
!
RULE for location of dam within Pacific Ocean Division
IF   Division = 8
AND  POD District IS Japan
THEN Location of dam is known
AND  Division name := Pacific Ocean Division
AND  District name := "Japan"
AND  Division abbreviation := POD
AND  District abbreviation := POJ
AND  No previous seepage
AND  CHAIN DU.KNB
!
RULE for location of dam within South Atlantic Division
IF   Division = 9
AND  SAD District IS Charleston
THEN Location of dam is known
AND  DISPLAY no dams in this district located in database
AND  Division name := South Atlantic Division
AND  District name := "Charleston"
AND  Division abbreviation := SAD
AND  District abbreviation := SAC
AND  No previous seepage
AND  CHAIN DU.KNB
!
RULE for location of dam within South Atlantic Division
IF   Division = 9
AND  SAD District IS Jacksonville
AND  SAJ Dam IS Inglis Spillway & Dam
THEN Location of dam is known
AND  Division name := South Atlantic Division
AND  District name := "Jacksonville"
AND  Division abbreviation := SAD
AND  District abbreviation := SAJ
```

```
AND  Recordno := 41
AND  Alldams recordno := 372
!
RULE for location of dam within South Atlantic Division
IF   Division = 9
AND  SAD District IS Jacksonville
AND  SAJ Dam IS Not listed
THEN Location of dam is known
AND  Division name := South Atlantic Division
AND  District name := "Jacksonville"
AND  Division abbreviation := SAD
AND  District abbreviation := SAJ
AND  No previous seepage
AND  CHAIN DU.KNB
!
RULE for location of dam within South Atlantic Division
IF   Division = 9
AND  SAD District IS Mobile
AND  SAM Dam IS Walter F. George Lock & Dam
THEN Location of dam is known
AND  Division name := South Atlantic Division
AND  District name := "Mobile"
AND  Division abbreviation := SAD
AND  District abbreviation := SAM
AND  Recordno := 89
AND  Alldams recordno := 392
!
RULE for location of dam within South Atlantic Division
IF   Division = 9
AND  SAD District IS Mobile
AND  SAM Dam IS Not listed
THEN Location of dam is known
AND  Division name := South Atlantic Division
AND  District name := "Mobile"
AND  Division abbreviation := SAD
AND  District abbreviation := SAM
AND  No previous seepage
AND  CHAIN DU.KNB
!
RULE for location of dam within South Atlantic Division
IF   Division = 9
AND  SAD District IS Savannah
AND  SAS Dam IS Hartwell Dam
THEN Location of dam is known
AND  Division name := South Atlantic Division
AND  District name := "Savannah"
AND  Division abbreviation := SAD
AND  District abbreviation := SAS
AND  Recordno := 33
AND  Alldams recordno := 397
!
RULE for location of dam within South Atlantic Division
```

```
IF   Division = 9
AND  SAD District IS Savannah
AND  SAS Dam IS Not listed
THEN Location of dam is known
AND  Division name := South Atlantic Division
AND  District name := "Savannah"
AND  Division abbreviation := SAD
AND  District abbreviation := SAS
AND  No previous seepage
AND  CHAIN DU.KNB
!
RULE for location of dam within South Atlantic Division
IF   Division = 9
AND  SAD District IS Wilmington
AND  SAW Dam IS B. Everett Jordan Dam
THEN Location of dam is known
AND  Division name := South Atlantic Division
AND  District name := "Wilmington"
AND  Division abbreviation := SAD
AND  District abbreviation := SAW
AND  Recordno := 90
AND  Alldams recordno := 398
!
RULE for location of dam within South Atlantic Division
IF   Division = 9
AND  SAD District IS Wilmington
AND  SAW Dam IS Not listed
THEN Location of dam is known
AND  Division name := South Atlantic Division
AND  District name := "Wilmington"
AND  Division abbreviation := SAD
AND  District abbreviation := SAW
AND  No previous seepage
AND  CHAIN DU.KNB
!
RULE for location of dam within South Pacific Division
IF   Division = 10
AND  SPD District IS Los Angeles
AND  SPL Dam IS Little Dalton Debris Dam
THEN Location of dam is known
AND  Division name := South Pacific Division
AND  District name := "Los Angeles"
AND  Division abbreviation := SPD
AND  District abbreviation := SPL
AND  Recordno := 42
AND  Alldams recordno := 695
!
RULE for location of dam within South Pacific Division
IF   Division = 10
AND  SPD District IS Los Angeles
AND  SPL Dam IS Painted Rock Dam
THEN Location of dam is known
```

```
AND  Division name := South Pacific Division
AND  District name := "Los Angeles"
AND  Division abbreviation := SPD
AND  District abbreviation := SPL
AND  Recordno := 91
AND  Alldams recordno := 430
!
RULE for location of dam within South Pacific Division
IF   Division = 10
AND  SPD District IS Los Angeles
AND  SPL Dam IS San Antonio Dam
THEN Location of dam is known
AND  Division name := South Pacific Division
AND  District name := "Los Angeles"
AND  Division abbreviation := SPD
AND  District abbreviation := SPL
AND  Recordno := 92
AND  Alldams recordno := 435
!
RULE for location of dam within South Pacific Division
IF   Division = 10
AND  SPD District IS Los Angeles
AND  SPL Dam IS Trilby Wash Dam
THEN Location of dam is known
AND  Division name := South Pacific Division
AND  District name := "Los Angeles"
AND  Division abbreviation := SPD
AND  District abbreviation := SPL
AND  Recordno := 93
AND  Alldams recordno := 701
!
RULE for location of dam within South Pacific Division
IF   Division = 10
AND  SPD District IS Los Angeles
AND  SPL Dam IS Not listed
THEN Location of dam is known
AND  Division name := South Pacific Division
AND  District name := "Los Angeles"
AND  Division abbreviation := SPD
AND  District abbreviation := SPL
AND  No previous seepage
AND  CHAIN DU.KNB
!
RULE for location of dam within South Pacific Division
IF   Division = 10
AND  SPD District IS Sacremento
AND  SPK Dam IS Hidden Dam
THEN Location of dam is known
AND  Division name := South Pacific Division
AND  District name := "Sacremento"
AND  Division abbreviation := SPD
AND  District abbreviation := SPK
```

```
AND  Recordno := 94
AND  Alldams recordno := 410
!
RULE for location of dam within South Pacific Division
IF   Division = 10
AND  SPD District IS Sacremento
AND  SPK Dam IS Martis Creek Dam
THEN Location of dam is known
AND  Division name := South Pacific Division
AND  District name := "Sacremento"
AND  Division abbreviation := SPD
AND  District abbreviation := SPK
AND  Recordno := 111
AND  Alldams recordno := 413
!
RULE for location of dam within South Pacific Division
IF   Division = 10
AND  SPD District IS Sacremento
AND  SPK Dam IS Not listed
THEN Location of dam is known
AND  Division name := South Pacific Division
AND  District name := "Sacremento"
AND  Division abbreviation := SPD
AND  District abbreviation := SPK
AND  No previous seepage
AND  CHAIN DU.KNB
!
RULE for location of dam within South Pacific Division
IF   Division = 10
AND  SPD District IS San Francisco
THEN Location of dam is known
AND  Division name := South Pacific Division
AND  District name := "San Francisco"
AND  Division abbreviation := SPD
AND  District abbreviation := SPN
AND  No previous seepage
AND  CHAIN DU.KNB
!
RULE for location of dam within Southwestern Division
IF   Division = 11
AND  SWD District IS Albuquerque
AND  SWA Dam IS Abiquiu Dam
THEN Location of dam is known
AND  Division name := South Western Division
AND  District name := "Albuquerque"
AND  Division abbreviation := SWD
AND  District abbreviation := SWA
AND  Recordno := 43
AND  Alldams recordno := 443
!
RULE for location of dam within Southwestern Division
IF   Division = 11
```

```
AND  SWD District IS Albuquerque
AND  SWA Dam IS Cochiti Dam
THEN Location of dam is known
AND  Division name := South Western Division
AND  District name := "Albuquerque"
AND  Division abbreviation := SWD
AND  District abbreviation := SWA
AND  Recordno := 44
AND  Alldams recordno := 444
!
RULE for location of dam within Southwestern Division
IF   Division = 11
AND  SWD District IS Albuquerque
AND  SWA Dam IS John Martin Dam & Reservoir
THEN Location of dam is known
AND  Division name := South Western Division
AND  District name := "Albuquerque"
AND  Division abbreviation := SWD
AND  District abbreviation := SWA
AND  Recordno := 29
AND  Alldams recordno := 449
!
RULE for location of dam within Southwestern Division
IF   Division = 11
AND  SWD District IS Albuquerque
AND  SWA Dam IS Not listed
THEN Location of dam is known
AND  Division name := South Western Division
AND  District name := "Albuquerque"
AND  Division abbreviation := SWD
AND  District abbreviation := SWA
AND  No previous seepage
AND  CHAIN DU.KNB
!
RULE for location of dam within Southwestern Division
IF   Division = 11
AND  SWD District IS Fort Worth
AND  SWF Dam IS Aquilla Dam
THEN Location of dam is known
AND  Division name := South Western Division
AND  District name := "Fort Worth"
AND  Division abbreviation := SWD
AND  District abbreviation := SWF
AND  Recordno := 45
AND  Alldams recordno := 459
!
RULE for location of dam within Southwestern Division
IF   Division = 11
AND  SWD District IS Fort Worth
AND  SWF Dam IS Canyon Dam
THEN Location of dam is known
AND  Division name := South Western Division
```

```
AND  District name := "Fort Worth"
AND  Division abbreviation := SWD
AND  District abbreviation := SWF
AND  Recordno := 112
AND  Alldams recordno := 463
!
RULE for location of dam within Southwestern Division
IF   Division = 11
AND  SWD District IS Fort Worth
AND  SWF Dam IS Ferrells Bridge Dam
THEN Location of dam is known
AND  Division name := South Western Division
AND  District name := "Fort Worth"
AND  Division abbreviation := SWD
AND  District abbreviation := SWF
AND  Recordno := 46
AND  Alldams recordno := 464
!
RULE for location of dam within Southwestern Division
IF   Division = 11
AND  SWD District IS Fort Worth
AND  SWF Dam IS Grapevine Dam
THEN Location of dam is known
AND  Division name := South Western Division
AND  District name := "Fort Worth"
AND  Division abbreviation := SWD
AND  District abbreviation := SWF
AND  Recordno := 47
AND  Alldams recordno := 466
!
RULE for location of dam within Southwestern Division
IF   Division = 11
AND  SWD District IS Fort Worth
AND  SWF Dam IS Lavon Dam
THEN Location of dam is known
AND  Division name := South Western Division
AND  District name := "Fort Worth"
AND  Division abbreviation := SWD
AND  District abbreviation := SWF
AND  Recordno := 48
AND  Alldams recordno := 468
!
RULE for location of dam within Southwestern Division
IF   Division = 11
AND  SWD District IS Fort Worth
AND  SWF Dam IS North San Gabriel Dam
THEN Location of dam is known
AND  Division name := South Western Division
AND  District name := "Fort Worth"
AND  Division abbreviation := SWD
AND  District abbreviation := SWF
AND  Recordno := 52
```

```
AND  Alldams recordno := 471
!
RULE for location of dam within Southwestern Division
IF   Division = 11
AND  SWD District IS Fort Worth
AND  SWF Dam IS O.C. Fisher Dam
THEN Location of dam is known
AND  Division name := South Western Division
AND  District name := "Fort Worth"
AND  Division abbreviation := SWD
AND  District abbreviation := SWF
AND  Recordno := 51
AND  Alldams recordno := 472
!
RULE for location of dam within Southwestern Division
IF   Division = 11
AND  SWD District IS Fort Worth
AND  SWF Dam IS Sam Rayburn Dam
THEN Location of dam is known
AND  Division name := South Western Division
AND  District name := "Fort Worth"
AND  Division abbreviation := SWD
AND  District abbreviation := SWF
AND  Recordno := 53
AND  Alldams recordno := 474
!
RULE for location of dam within Southwestern Division
IF   Division = 11
AND  SWD District IS Fort Worth
AND  SWF Dam IS Stillhouse Hollow Dam
THEN Location of dam is known
AND  Division name := South Western Division
AND  District name := "Fort Worth"
AND  Division abbreviation := SWD
AND  District abbreviation := SWF
AND  Recordno := 113
AND  Alldams recordno := 476
!
RULE for location of dam within Southwestern Division
IF   Division = 11
AND  SWD District IS Fort Worth
AND  SWF Dam IS Not listed
THEN Location of dam is known
AND  Division name := South Western Division
AND  District name := "Fort Worth"
AND  Division abbreviation := SWD
AND  District abbreviation := SWF
AND  No previous seepage
AND  CHAIN DU.KNB
!
RULE for location of dam within Southwestern Division
IF   Division = 11
```

```
AND  SWD District IS Galveston
AND  SWG Dam IS Addicks Dam
THEN Location of dam is known
AND  Division name := South Western Division
AND  District name := "Galveston"
AND  Division abbreviation := SWD
AND  District abbreviation := SWG
AND  Recordno := 114
AND  Alldams recordno := 481
!
RULE for location of dam within Southwestern Division
IF   Division = 11
AND  SWD District IS Galveston
AND  SWG Dam IS Barker Dam
THEN Location of dam is known
AND  Division name := South Western Division
AND  District name := "Galveston"
AND  Division abbreviation := SWD
AND  District abbreviation := SWG
AND  Recordno := 115
AND  Alldams recordno := 482
!
RULE for location of dam within Southwestern Division
IF   Division = 11
AND  SWD District IS Galveston
AND  SWG Dam IS Not listed
THEN Location of dam is known
AND  Division name := South Western Division
AND  District name := "Galveston"
AND  Division abbreviation := SWD
AND  District abbreviation := SWG
AND  No previous seepage
AND  CHAIN DU.KNB
!
RULE for location of dam within Southwestern Division
IF   Division = 11
AND  SWD District IS Little Rock
AND  SWL Dam IS Beaver
THEN Location of dam is known
AND  Division name := South Western Division
AND  District name := "Little Rock"
AND  Division abbreviation := SWD
AND  District abbreviation := SWL
AND  Recordno := 95
AND  Alldams recordno := 483
!
RULE for location of dam within Southwestern Division
IF   Division = 11
AND  SWD District IS Little Rock
AND  SWL Dam IS Clearwater Dam
THEN Location of dam is known
AND  Division name := South Western Division
```

```
AND  District name := "Little Rock"
AND  Division abbreviation := SWD
AND  District abbreviation := SWL
AND  Recordno := 81
AND  Alldams recordno := 486
!
RULE for location of dam within Southwestern Division
IF   Division = 11
AND  SWD District IS Little Rock
AND  SWL Dam IS Greers Ferry
THEN Location of dam is known
AND  Division name := South Western Division
AND  District name := "Little Rock"
AND  Division abbreviation := SWD
AND  District abbreviation := SWL
AND  Recordno := 54
AND  Alldams recordno := 492
!
RULE for location of dam within Southwestern Division
IF   Division = 11
AND  SWD District IS Little Rock
AND  SWL Dam IS Lock & Dam No. 3
THEN Location of dam is known
AND  Division name := South Western Division
AND  District name := "Little Rock"
AND  Division abbreviation := SWD
AND  District abbreviation := SWL
AND  Recordno := 82
AND  Alldams recordno := 16
!
RULE for location of dam within Southwestern Division
IF   Division = 11
AND  SWD District IS Little Rock
AND  SWL Dam IS Table Rock Dam
THEN Location of dam is known
AND  Division name := South Western Division
AND  District name := "Little Rock"
AND  Division abbreviation := SWD
AND  District abbreviation := SWL
AND  Recordno := 55
AND  Alldams recordno := 501
!
RULE for location of dam within Southwestern Division
IF   Division = 11
AND  SWD District IS Little Rock
AND  SWL Dam IS Not listed
THEN Location of dam is known
AND  Division name := South Western Division
AND  District name := "Little Rock"
AND  Division abbreviation := SWD
AND  District abbreviation := SWL
AND  No previous seepage
```

```
AND  CHAIN DU.KNB
!
RULE for location of dam within Southwestern Division
IF   Division = 11
AND  SWD District IS Tulsa
AND  SWT Dam IS Elk City
THEN Location of dam is known
AND  Division name := South Western Division
AND  District name := "Tulsa"
AND  Division abbreviation := SWD
AND  District abbreviation := SWT
AND  Recordno := 56
AND  Alldams recordno := 510
!
RULE for location of dam within Southwestern Division
IF   Division = 11
AND  SWD District IS Tulsa
AND  SWT Dam IS Fall River
THEN Location of dam is known
AND  Division name := South Western Division
AND  District name := "Tulsa"
AND  Division abbreviation := SWD
AND  District abbreviation := SWT
AND  Recordno := 57
AND  Alldams recordno := 512
!
RULE for location of dam within Southwestern Division
IF   Division = 11
AND  SWD District IS Tulsa
AND  SWT Dam IS Marion
THEN Location of dam is known
AND  Division name := South Western Division
AND  District name := "Tulsa"
AND  Division abbreviation := SWD
AND  District abbreviation := SWT
AND  Recordno := 97
AND  Alldams recordno := 522
!
RULE for location of dam within Southwestern Division
IF   Division = 11
AND  SWD District IS Tulsa
AND  SWT Dam IS Pine Creek
THEN Location of dam is known
AND  Division name := South Western Division
AND  District name := "Tulsa"
AND  Division abbreviation := SWD
AND  District abbreviation := SWT
AND  Recordno := 58
AND  Alldams recordno := 526
!
RULE for location of dam within Southwestern Division
IF   Division = 11
```

```
AND  SWD District IS Tulsa
AND  SWT Dam IS Skiatook Lake
THEN Location of dam is known
AND  Division name := South Western Division
AND  District name := "Tulsa"
AND  Division abbreviation := SWD
AND  District abbreviation := SWT
AND  Recordno := 96
AND  Alldams recordno := 584
!
RULE for location of dam within Southwestern Division
IF   Division = 11
AND  SWD District IS Tulsa
AND  SWT Dam IS Toronto
THEN Location of dam is known
AND  Division name := South Western Division
AND  District name := "Tulsa"
AND  Division abbreviation := SWD
AND  District abbreviation := SWT
AND  Recordno := 59
AND  Alldams recordno := 529
!
RULE for location of dam within Southwestern Division
IF   Division = 11
AND  SWD District IS Tulsa
AND  SWT Dam IS Waurika
THEN Location of dam is known
AND  Division name := South Western Division
AND  District name := "Tulsa"
AND  Division abbreviation := SWD
AND  District abbreviation := SWT
AND  Recordno := 60
AND  Alldams recordno := 530
!
RULE for location of dam within Southwestern Division
IF   Division = 11
AND  SWD District IS Tulsa
AND  SWT Dam IS Wister
THEN Location of dam is known
AND  Division name := South Western Division
AND  District name := "Tulsa"
AND  Division abbreviation := SWD
AND  District abbreviation := SWT
AND  Recordno := 61
AND  Alldams recordno := 532
!
RULE for location of dam within Southwestern Division
IF   Division = 11
AND  SWD District IS Tulsa
AND  SWT Dam IS Not listed
THEN Location of dam is known
AND  Division name := South Western Division
```

```
AND  District name := "Tulsa"
AND  Division abbreviation := SWD
AND  District abbreviation := SWT
AND  No previous seepage
AND  CHAIN DU.KNB
!
RULE for checking proper entry of division data
IF   Division <> 1
OR   Division <> 2
OR   Division <> 3
OR   Division <> 4
OR   Division <> 5
OR   Division <> 6
OR   Division <> 7
OR   Division <> 8
OR   Division <> 9
OR   Division <> 10
OR   Division <> 11
THEN Location of dam is known
AND  DISPLAY Enter again
AND  FORGET Location of dam is known
AND  FORGET Division
AND  CYCLE
!
RULE for determining type of dam from database
IF   Location of dam is known
AND  Construction of dam = compacted earth
OR   Construction of dam = compacted earthfill
OR   Construction of dam = hydraulic earthfill
OR   Construction of dam = compacted, hydraulic earthfill
OR   Construction of dam = earthfill
OR   Construction of dam = compacted earthfill embankment
OR   Construction of dam = compacted earthfilll
OR   Construction of dam = compacted earch
OR   Construction of dam = compacted earthfillll
OR   Construction of dam = compacted earthfill, 3000 ft embankment
OR   Construction of dam = bridge & embankment.compacted earth
THEN Dam type known
!AND  Type of dam IS Earth embankment
!
RULE for determining type of dam from database
IF   Location of dam is known
AND  Construction of dam = concrete,gravity
OR   Construction of dam = concrete gravity
OR   Construction of dam = concrete gravityroller compacted concr
OR   Construction of dam = concrete gravity w earth embankment
OR   Construction of dam = compacted earthfill,concrete gravity
OR   Construction of dam = compacted earth;rock;concrete,gravity
OR   Construction of dam = concrete gravity;earthfill,rockfill
OR   Construction of dam = compacted earthfill, concrete gravity
OR   Construction of dam = compacted earthfill;concrete gravity
OR   Construction of dam = compacted earthfill;concret gravity
```

```
OR   Construction of dam = compacted earthfill,concrete
THEN Dam type known
!AND  Type of dam IS Concrete or Roller compacted concrete
!
RULE for determining type of dam from database
IF   Location of dam is known
AND  Construction of dam = rockfill
OR   Construction of dam = compacted earth, rockfill
OR   Construction of dam = earth and rockfilll
OR   Construction of dam = compacted earthfill, rockfill
OR   Construction of dam = compacted earth;rockfill
OR   Construction of dam = compacted earth,rockfill
OR   Construction of dam = compacted earthfill,rockfill
OR   Construction of dam = compacted earthfill and rockfill
OR   Construction of dam = earth and rockfill
OR   Construction of dam = compact earthfill, rockfill w earthcore
THEN Dam type known
!AND  Type of dam IS Rockfilled
!
!   DISPLAY SECTION
!
DISPLAY Logo

                        D A M S E L

                 An Expert System Designed to
Diagnose and Recommend Remedial Actions for                          Dam
Seepage-Leakage Problems

                        Version 1.0
                                                                     Expert
Level Knowledge              Knowledge Engineering
                                                        by
          by
                     U.S. Army Engineers              Dept. of Electrical
Engineering    Waterways Experiment Station       Mississippi State University

                                                                     Press the
ENTER key to go directly into the consultation.
!
DISPLAY Disclaimer
```

DISCLAIMER

The U.S. Army Engineer expressly declares that there are no warranties expressed or implied which apply to the software contained herein. Byacceptance and use of said software, which is conveyed to the user without consideration by the U.S. Army Engineer, the user hereof expressly waives any and all claims for damage and/or suits for or by reason of personalinjury, or property damage, including special, consequential or other
similar damages arising out of or in any way connected with the use of the software contained herein.

Press the ENTER key to continue.
!
DISPLAY Primary seepage instructions

On the next page, I am going to ask you to tell me one of the primary manifestations of seepage or leakage that you have observed at [Name of dam].

It can be located anywhere - not just on the embankment.

To make your selection, you will use the UP/DOWN ARROW keys to select a type of seepage manifestation and then press ENTER.
If you find that you need help once you start your selections, press the F5 key for additional technical and operational instructions.

Press the F7 key to PRINT this page.
Press the ENTER key to continue.
!
DISPLAY database 2

The [Name of dam] has had a total of [Number of previous problems(2,0)] previous problem(s) with seepage-leakage of water according to my seepage database. This information was last updated [date of infol].

The original seepage control measures at this dam were:

[seepage design]

Information from the seepage database about the foundation is summarized below:

Rock foundation - [rock foundation]
Rock condition - [rock condition]
Soil foundation - [soil foundation]
Soil type - [soil type]
Geologist's note - [geologic note]

Press the F7 key to PRINT this page.
Press the ENTER key to continue.
!
DISPLAY database 3

Information I have about the seepage problem(s) at the
[Name of dam] are summarized on the following screen(s).
I have provided information on as many as two actions taken on a single problem.

Date - [Problem date1]
Problem description - [Problem description1]
Problem location - [Problem location1]
Quantity of seepage - [Quantity1]

First action taken -
[Problem action11]
Monitoring information on action taken -
[Problem monitor11]

Second action taken (if necessary) -
[Problem action12]
Monitoring information on action taken -
[Problem monitor12]

Press the F7 key to PRINT this page. Press the ENTER key to continue.
!
DISPLAY database 4

Date - [Problem date2]
Problem description - [Problem description2]
Problem location - [Problem location2]
Quantity of seepage - [Quantity2]

First action taken -
[Problem action21]
Monitoring information on action taken -
[Problem monitor21]

Second action taken (if necessary) -
[Problem action22]
Monitoring information on action taken -
[Problem monitor22]

Press the F7 key to PRINT this page.
Press the ENTER key to continue.
!
DISPLAY database 5

Date - [Problem date3]
Problem description - [Problem description3]
Problem location - [Problem location3]
Quantity of seepage - [Quantity3]

First action taken -
[Problem action31]
Monitoring information on action taken -
[Problem monitor31]

Second action taken (if necessary) -
[Problem action32]
Monitoring information on action taken -
[Problem monitor32]

Press the F7 key to PRINT this page.
Press the ENTER key to continue.
!
DISPLAY cdam database 1

[Name of dam]
Dam ID - [Dam ID] Information as of - [date of info2]

PURPOSE
[Purpose is]

DESCRIPTION	CURRENT INFORMATION
State	[State]
County	[County]
Year completed	[Year completed(4,0)]
River	[River]
Lake	[Lake]
Nearest downstream city	[Closest city]
Distance	[distance(3,0)] miles
Population	[population(6,0)]
Category	[COE category]

Press the F7 key to PRINT this page. Press the ENTER key to continue.
!
DISPLAY cdam database 2

[Name of dam]

Dam ID - [Dam ID] Information as of - [date of info2]

Normal capacity	[Normal capacity(7,0)] ac. ft.
Maximum capacity	[Maximum capacity(7,0)] ac. ft.
Hydraulic height	[Hydraulic height(3,0)] ft.
Structure height	[Str height(3,0)] ft.
Crest length	[Crest(6,0)] ft.
Seismic zone	[Seismic rating]
Hazard potential	[Potential hazard] or [Hazardcode]
Type of spillway	[Spillway is]
Spillway width	[Spillway width] ft.
Spillway discharge	[Spillway discharge] cu.ft./s
Number of locks	[Number of locks(2,0)]

Press the F7 key to PRINT this page. Press the ENTER key to continue.
!
DISPLAY Enter again

You have entered the number [division] for the COE Division.

Please use one of the numbers from the following list:

1	Lower Mississippi Valley	7	Ohio River
2	Missouri River	8	Pacific Ocean
3	New England	9	South Atlantic
4	North Atlantic	10	South Pacific
5	North Central	11	Southwestern
6	North Pacific		

You will now be asked to reenter your selection.

Press the F7 key to PRINT this page.
Press the ENTER key to continue.
!
DISPLAY no dams in this district located in database

The COE Seepage Database does not have any information on dams from this District. Therefore, I will need to ask you some questions about your particular dam.

Press the ENTER key to continue.
!
! EXPAND SECTION
!
EXPAND Primary seepage manifestation

TECHNICAL INSTRUCTIONS

Evidence of damage to appurtenent structures can be -
leaky or strained conduit
conduit carrying soil deposits
cracked or misaligned structures such as the spillway or stilling basin

Signs of mass movement can be -
slides, sloughs, bulges, sag in crest, cracks, misaligned guard rails, etc.

OPERATIONAL INSTRUCTIONS

1. Use UP/DOWN ARROW keys.
2. Use the ENTER key to select an item.

Press the F8 key to return.
!
! TEXT SECTION
!
TEXT Division

Please enter the number associated with the Corps of Engineers Division where the dam of concern is located. Please use the number assigned from the following list:

1	Lower Mississippi Valley	7	Ohio River
2	Missouri River	8	Pacific Ocean
3	New England	9	South Atlantic
4	North Atlantic	10	South Pacific
5	North Central	11	Southwestern
6	North Pacific		

!
TEXT Type of dam

I have information on your dam construction from two different databases.

Seepage database - [Construction of dam]
COE dams database - [Type is]

Please select one of the following categories that best describes the type of construction at [name of dam] where the
leakage is occurring.

Use the UP/DOWN ARROW keys to make your selection and then press ENTER.

!
TEXT Name of dam

What is the name of the dam?

!

TEXT Primary seepage manifestation
!
TEXT LMV District

Please use the UP/DOWN arrow keys to select the appropriate COE District within the Lower Mississippi Valley Division.

Press ENTER after making your selection.

!
TEXT MRD District

Please use the UP/DOWN arrow keys to select the appropriate COE District within the Missouri River Division.

Press ENTER after making your selection.

!
TEXT NED District

Please use the UP/DOWN arrow keys to select the appropriate COE District within the New England Division.

Press ENTER after making your selection.

!
TEXT NAD District

Please use the UP/DOWN arrow keys to select the appropriate COE District within the North Atlantic Division.

Press ENTER after making your selection.
!
TEXT NCD District

Please use the UP/DOWN arrow keys to select the appropriate COE District within the North Central Division.

Press ENTER after making your selection.

!
TEXT NPD District

Please use the UP/DOWN arrow keys to select the appropriate COE District within the North Pacific Division.

Press ENTER after making your selection.

!
TEXT ORD District

Please use the UP/DOWN arrow keys to select the appropriate COE District within

the Ohio River Division.

Press ENTER after making your selection.

!
TEXT POD District

Please use the UP/DOWN arrow keys to select the appropriate COE District within the Pacific Ocean Division.

Press ENTER after making your selection.

!
TEXT SAD District

Please use the UP/DOWN arrow keys to select the appropriate COE District within the South Atlantic Division.

Press ENTER after making your selection.

!
TEXT SPD District

Please use the UP/DOWN arrow keys to select the appropriate COE District within the South Pacific Division.

Press ENTER after making your selection.

!
TEXT SWD District

Please use the UP/DOWN arrow keys to select the appropriate COE District within the South-Western Division.

Press ENTER after making your selection.

!
TEXT LMS Dam

Please use the UP/DOWN arrow keys to select the appropriate dam within the St. Louis District. If your dam name does not appear on this list, please select "Not listed."

Press ENTER after making your selection.

!
TEXT LMK Dam

Please use the UP/DOWN arrow keys to select the appropriate dam within the Vicksburg District. If your dam name does not appear on this list, please select "Not listed."

Press ENTER after making your selection.

!
TEXT MRO Dam

Please use the UP/DOWN arrow keys to select the appropriate dam within the Omaha District. If your dam name does not appear on this list, please select "Not listed." Note that there are dam names on [pages (1,0)] pages. Please use the F1 key to PAGE between the screens.

Press ENTER after making your selection.

!
TEXT NED Dam

Please use the UP/DOWN arrow keys to select the appropriate dam within the New England District. If your dam name does not appear on this list, please select "Not listed." Note that there are dam names on [pages (1,0)] pages. Please use the F1 key to PAGE between the screens.

Press ENTER after making your selection.

!
TEXT NAB Dam

Please use the UP/DOWN arrow keys to select the appropriate dam within the Baltimore District. If your dam name does not appear on this list, please select "Not listed."

Press ENTER after making your selection.

!
TEXT NAN Dam

Please use the UP/DOWN arrow keys to select the appropriate dam within the New York District. If your dam name does not appear on this list, please select "Not listed."

Press ENTER after making your selection.

!
TEXT NAO Dam

Please use the UP/DOWN arrow keys to select the appropriate dam within the Norfolk District. If your dam name does not appear on this list, please select "Not listed."

Press ENTER after making your selection.

!
TEXT NAP Dam

Please use the UP/DOWN arrow keys to select the appropriate dam within the Philadelphia District. If your dam name does not appear on this list, please select "Not listed."

Press ENTER after making your selection.

!
TEXT NCR Dam
Please use the UP/DOWN arrow keys to select the appropriate dam within the Rock Island District. If your dam name does not appear on this list, please select "Not listed."

Press ENTER after making your selection.

!
TEXT NCS Dam

Please use the UP/DOWN arrow keys to select the appropriate dam within the St. Paul District. If your dam name does not appear on this list, please select "Not listed."

Press ENTER after making your selection.

!
TEXT NPA Dam

Please use the UP/DOWN arrow keys to select the appropriate dam within the Alaska District. If your dam name does not appear on this list, please select "Not listed."

Press ENTER after making your selection.

!
TEXT NPP Dam

Please use the UP/DOWN arrow keys to select the appropriate dam within the Portland District. If your dam name does not appear on this list, please select "Not listed."

Press ENTER after making your selection.

!
TEXT NPS Dam

Please use the UP/DOWN arrow keys to select the appropriate dam within the Seattle District. If your dam name does not appear on this list, please select "Not listed."

Press ENTER after making your selection.

!
TEXT NPW Dam

Please use the UP/DOWN arrow keys to select the appropriate dam within the Walla Walla District. If your dam name does not appear on this list, please select "Not listed."

Press ENTER after making your selection.

!
TEXT ORH Dam

Please use the UP/DOWN arrow keys to select the appropriate dam within the Huntington District. If your dam name does not appear on this list, please select "Not listed." Note that there are dam names on [pages (1,0)] pages. Please use the F1 key to PAGE between the screens.

Press ENTER after making your selection.

!
TEXT ORL Dam

Please use the UP/DOWN arrow keys to select the appropriate dam within the Louisville District. If your dam name does not appear on this list, please select "Not listed."

Press ENTER after making your selection.

!
TEXT ORN Dam

Please use the UP/DOWN arrow keys to select the appropriate dam within the Nashville District. If your dam name does not appear on this list, please select "Not listed."

Press ENTER after making your selection.

!
TEXT ORP Dam

Please use the UP/DOWN arrow keys to select the appropriate dam within the Pittsburgh District. If your dam name does not appear on this list, please select "Not listed."

Press ENTER after making your selection.

!
TEXT POH Dam

Please use the UP/DOWN arrow keys to select the appropriate dam within the Honolulu District. If your dam name does not appear on this list, please select "Not listed."

Press ENTER after making your selection.

!
TEXT SAJ Dam

Please use the UP/DOWN arrow keys to select the appropriate dam within the Jacksonville District. If your dam name does not appear on this list, please select "Not listed."

Press ENTER after making your selection.

!
TEXT SAM Dam

Please use the UP/DOWN arrow keys to select the appropriate dam within the Mobile District. If your dam name does not appear on this list, please select "Not listed."

Press ENTER after making your selection.

!
TEXT SAS Dam

Please use the UP/DOWN arrow keys to select the appropriate dam within the Savannah District. If your dam name does not appear on this list, please select "Not listed."

Press ENTER after making your selection.

!
TEXT SAW Dam

Please use the UP/DOWN arrow keys to select the appropriate dam within the Wilmington District. If your dam name does not appear on this list, please select "Not listed."

Press ENTER after making your selection.
!
TEXT SPL Dam

Please use the UP/DOWN arrow keys to select the appropriate dam within the Los Angeles District. If your dam name does not appear on this list, please select "Not listed."

Press ENTER after making your selection.

!
TEXT SPK Dam

Please use the UP/DOWN arrow keys to select the appropriate dam within the Sacremento District. If your dam name does not appear on this list, please select "Not listed."

Press ENTER after making your selection.

!
TEXT SWA Dam

Please use the UP/DOWN arrow keys to select the appropriate dam within the Albuquerque District. If your dam name does not appear on this list, please select "Not listed."

Press ENTER after making your selection.

!
TEXT SWF Dam

Please use the UP/DOWN arrow keys to select the appropriate dam within the Ft. Worth District. If your dam name does not appear on this list, please select "Not listed." Note that there are dam names on [pages (1,0)] pages. Please use the F1 key to PAGE between the screens.

Press ENTER after making your selection.

!
TEXT SWG Dam

Please use the UP/DOWN arrow keys to select the appropriate dam within the Galveston District. If your dam name does not appear on this list, please select "Not listed."
Press ENTER after making your selection.

!
TEXT SWL Dam

Please use the UP/DOWN arrow keys to select the appropriate dam within the Little Rock District. If your dam name does not appear on this list, please select "Not listed."

Press ENTER after making your selection.

!
TEXT SWT Dam

Please use the UP/DOWN arrow keys to select the appropriate dam within the Tulsa District. If your dam name does not appear on this list, please select "Not listed." Note that there are dam names on [pages (1,0)] pages. Please use the F1 key to PAGE between the screens.

Press ENTER after making your selection.

!
TEXT Display information from cdam database

I have additional information on [name of dam]
from the COE dams database.

Would you like to see this information?

!
END

APPENDIX B

DB KNOWLEDGE BASE PRINTOUT

```
TITLE Boils DISPLAY
```

BOILS

This knowledge base of DAMSEAL will help you in ascertaining the cause of the boils at your dam.

```
Press the ENTER key to continue.
!
!
!
$ SHAREFIL.PRL
!
!OBJECT   Determine cause of seepage
SUPPRESS ALL
GOALSELECT OFF
CONFIDENCE OFF
!
!  GOALS
!
1.  Determine cause of seepage
    1.1 Continue
2.  Unable to determine cause of seepage
!
RULE to determine if boils due to piezometric gradients in soil
IF   Type of dam IS earth embankment
OR   Type of dam IS rockfilled
AND  Location of boils IS downstream of the dam
AND  The foundation is soil
AND  NOT The foundation is fractured rock
AND  NOT A recent earthquake
AND  The boils are moving soil
THEN Determine cause of seepage IS piezometric gradients in soil
AND  DISPLAY Piezometric gradients in soil info 1
AND  PAINT COE13.PIC
AND  PAINT COE14.PIC
AND  DISPLAY Piezometric gradients in soil info 2
AND  PAINT COE6.PIC
!
RULE to determine if boils due to piezometric gradients in soil
IF   Type of dam IS concrete or roller compacted concrete
AND  The foundation is soil
AND  NOT The foundation is fractured rock
AND  NOT A recent earthquake
AND  The boils are moving soil
THEN Determine cause of seepage IS piezometric gradients in soil
AND  DISPLAY Piezometric gradients in soil info 1
AND  PAINT COE13.PIC
AND  PAINT COE14.PIC
```

```
AND  DISPLAY Piezometric gradients in soil info 2
AND  PAINT COE6.PIC
!
RULE to determine if boils due to piezometric gradients in rock
IF   Type of dam IS earth embankment
OR   Type of dam IS rockfilled
AND  Location of boils IS downstream of the dam
AND  The foundation is soil
AND  The foundation is fractured rock
THEN Determine cause of seepage IS piezometric gradients in rock
AND  DISPLAY Piezometric gradients in rock info
AND  PAINT COE5.PIC
AND  PAINT COE19.PIC
AND  PAINT COE26.PIC
!
RULE to determine if boils due to piezometric gradients in rock
IF   Type of dam IS concrete or roller compacted concrete
AND  The foundation is soil
AND  The foundation is fractured rock
THEN Determine cause of seepage IS piezometric gradients in rock
AND  DISPLAY Piezometric gradients in rock info
AND  PAINT COE5.PIC
AND  PAINT COE19.PIC
AND  PAINT COE26.PIC
!
RULE to determine if boils due to piezometric gradients in rock

IF   Type of dam IS earth embankment
OR   Type of dam IS rockfilled
AND  Location of boils IS downstream of the dam
AND  NOT The foundation is soil
AND  The foundation is fractured rock
THEN Determine cause of seepage IS piezometric gradients in rock
AND  DISPLAY Piezometric gradients in rock info
AND  PAINT COE5.PIC
AND  PAINT COE19.PIC
AND  PAINT COE26.PIC
!
RULE to determine if boils due to piezometric gradients in rock
IF   Type of dam IS concrete or roller compacted concrete
AND  NOT The foundation is soil
AND  The foundation is fractured rock
THEN Determine cause of seepage IS piezometric gradients in rock
AND  DISPLAY Piezometric gradients in rock info
AND  PAINT COE5.PIC
AND  PAINT COE19.PIC
AND  PAINT COE26.PIC
!
RULE to determine if boils are due to liquifaction
IF   Type of dam IS earth embankment
OR   Type of dam IS rockfilled
AND  Location of boils IS downstream of the dam
```

```
AND  The foundation is soil
AND  NOT The foundation is fractured rock
AND  A recent earthquake
AND  Flow rate of boils decreasing
THEN Determine cause of seepage IS liquifaction
AND  DISPLAY Liquifaction info
!
RULE to determine if boils are due to liquifaction
IF   Type of dam IS concrete or roller compacted concrete
AND  The foundation is soil
AND  NOT The foundation is fractured rock
AND  A recent earthquake
AND  Flow rate of boils decreasing
THEN Determine cause of seepage IS liquifaction
AND  DISPLAY Liquifaction info
!
RULE to determine proper solution for non boils problem
IF   Type of dam IS earth embankment
OR   Type of dam IS rockfilled
AND  Location of boils IS embankment
THEN Determine cause of seepage IS wrong problem
AND  DISPLAY wrong problem type
AND  FORGET Seepage is related to boils
AND  NOT Seepage is related to boils
AND  Seepage is related to turbid seepage
AND  Location of turbid seepage IS embankment
AND  CHAIN DTS.KNB
!
RULE to chain to the next knowledge base
IF   Determine cause of seepage IS piezometric gradients in soil
OR   Determine cause of seepage IS piezometric gradients in rock
OR   Determine cause of seepage IS liquifaction
THEN Continue
AND  FORGET Seepage is related to boils
AND  NOT Seepage is related to boils
AND  CHAIN DC.KNB
ELSE Unable to determine cause of seepage
AND  DISPLAY Unable to determine cause
AND  FORGET Seepage is related to boils
AND  NOT Seepage is related to boils
AND  CHAIN DC.KNB
!
!
!  DISPLAY SECTION
!
DISPLAY Piezometric gradients in soil info 1
```

CONCLUSION

The boils are probably due to high piezometric gradients and velocities at exit in silty/sandy foundation.

RECOMMENDATION

Reduce the piezometric head in the foundation with new or additional relief wells.

Information on this remedial action will be presented on the following screens.

Press the F7 key to PRINT this page.
Press the ENTER key to continue.
!
DISPLAY Piezometric gradients in soil info 2

RECOMMENDATION

If relief wells are insufficient or impractical, install a downstream berm to increase the seepage path and reduce the gradient.
Information on this remedial action will be presented on the following screen.

Press the F7 key to PRINT this page.
Press the ENTER key to continue.
!
DISPLAY Piezometric gradients in rock info

CONCLUSION

The boils are probably due to high piezometric gradients and velocities at exit from cavities and fractures in the rock foundation.

RECOMMENDATION

Install either an upstream blanket or cutoff, if one does not already exist. If it presently exists, it is in need of repair.

Information on these two remedial actions will be presented on the following screens.

Press the F7 key to PRINT this page.
Press the ENTER key to continue.
!
DISPLAY Liquifaction info

CONCLUSION

The boils and/or silt volcanoes in the vicinity of the dam are probably due to liquifaction of noncohesive materials during the recent earthquake.

RECOMMENDATION

Continue to monitor the boils for decreasing flow rate and inspect the [Name of dam] for evidence of new seepage.

Press the F7 key to PRINT this page.
Press the ENTER key to continue.
!
DISPLAY wrong problem type

I do not believe that these are truly boils by the classical definition. Since the "boils" are located on the [location of boils], the buildup of a ring of transported fines around the seepage exit would be difficult. The line of questioning is therefore being changed to address turbid seepage or seepage carrying fines, which is anticipated to be the problem. Also, remedial actions for the [location of boils] would be different from that used downstream of the dam where boils would typically be discovered.

Press the F7 key to PRINT this page.
Press the ENTER key to continue.
!
DISPLAY Unable to determine cause

CONCLUSION

DAMSEAL was unable to determine the cause of the boils from the information given and its knowledge.

Press the F7 key to PRINT this page.
Press the ENTER key to continue.
!
! TEXT SECTION
!
TEXT The foundation is soil

Are the boils located in a silty/sandy soil?

!
TEXT The boils are moving soil

Are the boils moving sand and silt?

!
TEXT The foundation is fractured rock

Is the foundation material beneath the boils solutioned, soluable, or highly fractured rock?
!
TEXT A recent earthquake

Has there been a recent moderate to severe earthquake? (i.e., within the last several minutes)

!
TEXT Flow rate of boils decreasing

The boils are rapidly decreasing in flow rate or have just ceased.

!
TEXT Location of boils

What is the location of the boils?

Use the UP/DOWN arrow keys to make your selection and then press ENTER.

!
END

APPENDIX C

DC KNOWLEDGE BASE PRINTOUT

```
TITLE   DAMSEAL
!
!  SHARED INCLUDE FILE
!
$ SHAREFIL.PRL
!
SUPPRESS ALL
CONFIDENCE OFF
GOALSELECT OFF
!
!  GOALS
!
1. Seek more information
2. Finish
!
RULE to chain to boils knowledge base
IF   Seepage is related to boils
THEN Seek more information
AND  CHAIN DB.KNB
!
RULE to chain to damaged structures knowledge base
IF   Seepage is related to damaged structures
THEN Seek more information
AND  CHAIN DDS.KNB
!
RULE to chain to flow rate changes knowledge base
IF   Seepage is related to flow rate changes
THEN Seek more information
AND  CHAIN DFR.KNB
!
RULE to chain to high piezometric readings knowledge base
IF   Seepage is related to piezometric readings
THEN Seek more information
AND  CHAIN DPR.KNB
!
RULE to chain to holes knowledge base
IF   Seepage is related to holes
THEN Seek more information
AND  CHAIN DH.KNB
!
RULE to chain to mass movement knowledge base
IF   Seepage is related to mass movement
THEN Seek more information
AND  CHAIN DMM.KNB
!
RULE to chain to turbid seepage knowledge base
IF   Seepage is related to turbid seepage
THEN Seek more information
AND  CHAIN DTS.KNB
!
RULE to chain to wet spots knowledge base
IF   Seepage is related to wet spots
```

```
THEN Seek more information
AND  CHAIN DWS.KNB
!
RULE to complete session
IF   Counter < 3
AND  Rerun IS Yes
AND  Dam IS New
THEN Finish
AND  FORGET ALL
AND  Begin
AND  CHAIN DAMSEAL.KNB
!
RULE to complete session
IF   Counter < 3
AND  Rerun IS Yes
AND  Dam IS Same
AND  No previous seepage
THEN Finish
AND  FORGET Primary seepage manifestation known
AND  FORGET Location of turbid seepage
AND  FORGET Dam data checked
AND  FORGET Dam information located
AND  FORGET Seepage is related to boils
AND  FORGET Seepage is related to damaged structures
AND  FORGET Seepage is related to flow rate changes
AND  FORGET Seepage is related to foundation heave
AND  FORGET Seepage is related to piezometric readings
AND  FORGET Seepage is related to holes
AND  FORGET Seepage is related to mass movement
AND  FORGET Seepage is related to turbid seepage
AND  FORGET Seepage is related to wet spots
AND  FORGET Construction of dam
AND  FORGET Rock foundation
AND  FORGET Rock condition
AND  FORGET Soil foundation
AND  FORGET Soil type
AND  FORGET Geologic note
AND  FORGET Seepage design
AND  FORGET Problem date1
AND  FORGET Problem date2
AND  FORGET Problem date3
AND  FORGET Problem location1
AND  FORGET Problem location2
AND  FORGET Problem location3
AND  FORGET Problem description1
AND  FORGET Problem description2
AND  FORGET Problem description3
AND  FORGET Problem action11
AND  FORGET Problem action12
AND  FORGET Problem action21
AND  FORGET Problem action22
AND  FORGET Problem action31
```

```
AND  FORGET Problem action32
AND  FORGET Problem monitor11
AND  FORGET Problem monitor12
AND  FORGET Problem monitor21
AND  FORGET Problem monitor22
AND  FORGET Problem monitor31
AND  FORGET Problem monitor32
AND  FORGET Dam ID
AND  FORGET State
AND  FORGET County
AND  FORGET Lake
AND  FORGET River
AND  FORGET COE category
AND  FORGET Closest city
AND  FORGET Seismic rating
AND  FORGET Purpose
AND  FORGET Purpose is
AND  FORGET Type
AND  FORGET Type is
AND  FORGET Spillway is
AND  FORGET Hazardcode
AND  FORGET Potential hazard
AND  FORGET Spillway type
AND  FORGET Quantity1
AND  FORGET Quantity2
AND  FORGET Quantity3
AND  FORGET Dam number
AND  FORGET Date of info1
AND  FORGET Date of info2
AND  FORGET Determine cause of seepage
AND  CHAIN DU.KNB
!
RULE to complete session
IF   Counter < 3
AND  Rerun IS Yes
AND  Dam IS Same
AND  NOT No previous seepage
THEN Finish
AND  FORGET Primary seepage manifestation known
AND  FORGET Dam data checked
AND  FORGET Dam information located
AND  FORGET Location of turbid seepage
AND  FORGET Seepage is related to boils
AND  FORGET Seepage is related to damaged structures
AND  FORGET Seepage is related to flow rate changes
AND  FORGET Seepage is related to foundation heave
AND  FORGET Seepage is related to piezometric readings
AND  FORGET Seepage is related to holes
AND  FORGET Seepage is related to mass movement
AND  FORGET Seepage is related to turbid seepage
AND  FORGET Seepage is related to wet spots
AND  FORGET Number of previous problems
```

```
AND  FORGET Construction of dam
AND  FORGET Rock foundation
AND  FORGET Rock condition
AND  FORGET Soil foundation
AND  FORGET Soil type
AND  FORGET Geologic note
AND  FORGET Seepage design
AND  FORGET Problem date1
AND  FORGET Problem date2
AND  FORGET Problem date3
AND  FORGET Problem location1
AND  FORGET Problem location2
AND  FORGET Problem location3
AND  FORGET Problem description1
AND  FORGET Problem description2
AND  FORGET Problem description3
AND  FORGET Problem action11
AND  FORGET Problem action12
AND  FORGET Problem action21
AND  FORGET Problem action22
AND  FORGET Problem action31
AND  FORGET Problem action32
AND  FORGET Problem monitor11
AND  FORGET Problem monitor12
AND  FORGET Problem monitor21
AND  FORGET Problem monitor22
AND  FORGET Problem monitor31
AND  FORGET Problem monitor32
AND  FORGET Dam ID
AND  FORGET State
AND  FORGET County
AND  FORGET Lake
AND  FORGET River
AND  FORGET COE category
AND  FORGET Closest city
AND  FORGET Seismic rating
AND  FORGET Purpose
AND  FORGET Purpose is
AND  FORGET Type
AND  FORGET Type is
AND  FORGET Spillway is
AND  FORGET Hazardcode
AND  FORGET Potential hazard
AND  FORGET Spillway type
AND  FORGET Quantity1
AND  FORGET Quantity2
AND  FORGET Quantity3
AND  FORGET Dam number
AND  FORGET Date of info1
AND  FORGET Date of info2
AND  FORGET Determine cause of seepage
AND  CHAIN DAMSEAL.KNB
```

```
!
RULE to complete session
IF   Counter < 3
AND  Rerun IS No
AND  Form IS No
THEN Finish
AND  DISPLAY Goodbye
AND  PAINT COELOGO.PIC
!
RULE to complete session
IF   Counter < 3
AND  Rerun IS No
AND  Form IS Yes
AND  PRINT Data form
THEN Finish
AND  DISPLAY Goodbye
AND  PAINT COELOGO.PIC
!
RULE to complete session
IF   Counter >= 3
AND  Rerun bad data IS Yes
THEN Finish
AND  FORGET ALL
AND  Begin
AND  CHAIN DAMSEAL.KNB
!
RULE to complete session
IF   Counter >= 3
AND  Rerun bad data IS No
THEN Finish
AND  DISPLAY Goodbye
AND  PAINT COELOGO.PIC
!
!   DISPLAY SECTION
!
```

DISPLAY Goodbye

THANK YOU FOR USING

THE

CORPS OF ENGINEERS

D A M S E A L

EXPERT SYSTEM

If you have any questions or comments please contact:

W.O. Miller
Waterways Experiment Station
3909 Halls Ferry Rd.
Vicksburg, MS 39180-6199
601-634-3147

Press the F7 key to PRINT this page.
Press the ENTER key to complete this consultation session.
!
DISPLAY Data form

Dam - [Name of dam]
Division - [Division name]
District - [District name]
Dam construction - [Type of dam]
Dam ID Number - [Dam ID]

Please describe the seepage or leakage problem you have been experiencing and what you have done to remedy the problem. Use additional pages if necessary.

Name -

Address -

Telephone number -

Date -

Please send the completed form to:

W.O. Miller
Waterways Experiment Station
3909 Halls Ferry Rd.
Vicksburg, MS 39180-6199
601-634-3147

!
TEXT Rerun

Do you wish to run DAMSEAL again?

!
TEXT Rerun bad data

You are continuing to enter what I think is bad data.

Do you wish to start over again?

!
TEXT Dam

Do you wish to use the same dam or will this be a new one?

!
TEXT Form

Would you be willing to complete a simple form about your problem and return it to the Waterways Experiment Station?

!
END

APPENDIX D

DDS KNOWLEDGE BASE PRINTOUT

TITLE Damage to Appurtenant Structures DISPLAY

DAMAGED

STRUCTURES

This knowledge base of DAMSEAL will help you in ascertaining the cause of the damage to appurtenant structures at your dam.

Press the ENTER key to continue.

```
!
!  SHARED INCLUDE FILE
!
$  SHAREFIL.PRL
!
!OBJECT Determine cause of seepage
SUPPRESS ALL
CONFIDENCE OFF
GOALSELECT OFF
!
!  GOALS
!
1. Determine cause of seepage
   1.1 Continue
2. Unable to determine cause of seepage
!
RULE for problem related to ground control
IF   Type of dam IS earth embankment
OR   Type of dam IS rockfilled
OR   Type of dam IS concrete or roller compacted concrete
AND  Damage to structures other than pipes
AND  NOT A recent earthquake
AND  NOT High piezometric levels beneath structures
THEN Determine cause of seepage IS ground control
AND  DISPLAY ground control info
!
RULE for problem related to uplift
IF   Type of dam IS earth embankment
OR   Type of dam IS rockfilled
OR   Type of dam IS concrete or roller compacted concrete
AND  Damage to structures other than pipes
AND  NOT A recent earthquake
AND  High piezometric levels beneath structures
THEN Determine cause of seepage IS uplift
AND  DISPLAY uplift info
AND  PAINT COE20.PIC
!
RULE for problem related to settled conduit
IF   Type of dam IS earth embankment
```

```
OR   Type of dam IS rockfilled
AND  NOT Damage to structures other than pipes
AND  Conduit misaligned
AND  NOT High piezometric levels
AND  NOT Water or soil leaking into conduit
THEN Determine cause of seepage IS settled conduit
AND  DISPLAY settled conduit info
!
RULE for problem related to bad conduit
IF   Type of dam IS earth embankment
OR   Type of dam IS rockfilled
AND  NOT Damage to structures other than pipes
AND  Water or soil leaking into conduit
THEN Determine cause of seepage IS bad conduit
AND  DISPLAY bad conduit info
!
RULE for problem related to earthquake
IF   Type of dam IS earth embankment
OR   Type of dam IS rockfilled
OR   Type of dam IS concrete or roller compacted concrete
AND  Damage to structures other than pipes
AND  A recent earthquake
THEN Determine cause of seepage IS earthquake
AND  DISPLAY earthquake info
!
RULE to chain to the next knowledge base
IF   Determine cause of seepage IS bad conduit
OR   Determine cause of seepage IS settled conduit
OR   Determine cause of seepage IS earthquake
OR   Determine cause of seepage IS ground control
OR   Determine cause of seepage IS uplift
THEN Continue
AND  FORGET Seepage is related to damaged structures
AND  NOT Seepage is related to damaged structures
AND  CHAIN DC.KNB
ELSE Unable to determine cause of seepage
AND  DISPLAY Unable to determine cause
AND  FORGET Seepage is related to damaged structures
AND  NOT Seepage is related to damaged structures
AND  CHAIN DC.KNB
!
!  DISPLAY SECTION
!
DISPLAY bad conduit info
```

CONCLUSION

The misalignment/damage to the conduit is probably due to settlement of the conduit and subsequent separation of the joints.

RECOMMENDATION

Grout the perimeter around the conduit to prevent additional movement. The displaced joints should be resealed and refinished to provide a smooth hydraulic surface.

Press the F7 key to PRINT this page.
Press the ENTER key to continue.
!
DISPLAY settled conduit info

CONCLUSION

The misaligned conduit is probably due to differential settlement of the conduit foundation.

RECOMMENDATION

Grout the perimeter around the conduit to prevent additional movement. The displaced joints should be resealed and refinished to provide a smooth hydraulic surface.

Press the F7 key to PRINT this page.
Press the ENTER key to continue.
!
DISPLAY earthquake info

CONCLUSION

The damaged or misaligned structures on/or in the vicinity of the dam is probably due to the earthquake.

At present, this is not a seepage problem. However, it could develop into one and should be evaluated.

RECOMMENDATION

Remedial actions should be taken to repair the damaged structures and to monitor the response of the structure in the future. A detailed inspection of other structures at [Name of dam] should
be made since some damage has already been observed.

Press the F7 key to PRINT this page.
Press the ENTER key to continue.
!
DISPLAY ground control info

CONCLUSION

The damage to the structures on/or in the vicinity of the dam is probably due to deterioration of the asphalt/concrete because of thermal stress, frost heave, corrosion of reinforcement, weathering, and/or swelling soils.

At present, this may not be a seepage problem. However, it could lead to one if appropriate measures are not taken.

RECOMMENDATION

Remedial actions should be taken to repair the damaged structures and to monitor the response of the structure in the future. If swelling soils are considered to be the problem the structure should be anchored.

Press the F7 key to PRINT this page.
Press the ENTER key to continue.
!
DISPLAY uplift info

CONCLUSION

The damage/misalignment of the structures in the vicinity of the dam is probably due to uplift from high piezometric levels.

RECOMMENDATION

Relief wells/drains or underdrains should be installed or rehabilitated to reduce the piezometric heads around the structure. The structure should then be dewatered and repairs made to the damaged area.

A typical relief well installation is shown on the following screen.

Press the F7 key to PRINT this page.
Press the ENTER key to continue.
!
DISPLAY Unable to determine cause

CONCLUSION

DAMSEAL was unable to determine the cause of the damage to the appurtenant structures from the information given and its knowledge.

Press the F7 key to PRINT this page.
Press the ENTER key to continue.
!
! TEXT SECTION
!
TEXT Water or soil leaking into conduit

Have you observed any of these problems with the conduit?

Water is leaking into the conduit.
There are soil deposits in the conduit outlet.
There are stains/deposits at the joints.

!
TEXT Conduit misaligned

Is the conduit misaligned?

!
TEXT High piezometric levels
Are there high piezometric levels around the conduit?

!
TEXT Damage to structures other than pipes

Are there cracked or damaged appurtenant structures excluding conduits and pipes?

!
TEXT A recent earthquake

Has there been a recent moderate to severe earthquake? (i.e., within the last several minutes)

!
TEXT High piezometric levels beneath structures

Are there high piezometric levels beneath the cracked or damaged appurtenant structures?

!
END

APPENDIX E

DFR KNOWLEDGE BASE PRINTOUT

TITLE Changes in Flow Rates in Toe Drainage System DISPLAY

CHANGES IN

FLOW RATE

This knowledge base of DAMSEAL will help you in ascertaining the cause of the change in flow rates in the toe drainage system at your dam.

```
Press the ENTER key to continue.
!
!
!  SHARED INCLUDE FILE
!
$ SHAREFIL.PRL
!
!OBJECT  Determine cause of seepage
SUPPRESS ALL
CONFIDENCE OFF
GOALSELECT OFF
!
!  GOALS
!
1. Determine cause of seepage
   1.1  Continue
2. Unable to determine cause of seepage
!
RULE for determining change due to clogged drains
IF   Type of dam IS earth embankment
AND  Changes in the flow rate
AND  Flow rate change IS decreased
AND  Increased piezometric levels in embankment
THEN Determine cause of seepage IS clogged drains
AND  DISPLAY clogged drains info
AND  PAINT COE8.PIC
!
RULE for determining change due to inadequate drains
IF   Type of dam IS earth embankment
OR   Type of dam IS rockfilled
AND  Changes in the flow rate
AND  Flow rate change IS increased

THEN Determine cause of seepage IS inadequate drains
AND  DISPLAY inadequate drains info
!
RULE for determining change due to sedimentation
IF   Type of dam IS earth embankment
OR   Type of dam IS rockfilled
AND  Changes in the flow rate
```

```
AND  Flow rate change IS decreased
THEN Determine cause of seepage IS sedimentation
AND  DISPLAY sedimentation info
!
RULE for chaining to the next knowledge base if concrete dam
IF   Type of dam IS concrete or roller compacted concrete
THEN Determine cause of seepage IS Not known
AND  DISPLAY No knowledge
AND  FORGET Seepage is related to flow rate changes
AND  NOT Seepage is related to flow rate changes
AND  CHAIN DC.KNB
!
RULE to chain to the next knowledge base
IF   Determine cause of seepage IS inadequate drains
OR   Determine cause of seepage IS sedimentation
OR   Determine cause of seepage IS clogged drains
THEN Continue
AND  FORGET Seepage is related to flow rate changes
AND  NOT Seepage is related to flow rate changes
AND  CHAIN DC.KNB
ELSE Unable to determine cause of seepage
AND  DISPLAY Unable to determine cause
AND  FORGET Seepage is related to flow rate changes
AND  NOT Seepage is related to flow rate changes
AND  CHAIN DC.KNB
!
!   DISPLAY SECTION
!
DISPLAY inadequate drains info
```

CONCLUSION

The flow rate increases in the toe drainage may be due to one of the following:

- inadequate filter design
- failure of the core
- dispersive material in the core
- breach in membrane and/or cutoff
- development of cracks due to hydraulic fracturing
- internal cracking or piping

RECOMMENDATION

Consider an immediate reduction in the pool level.

Contact the [Division name] Foundation and Material Branch.

Press the F7 key to PRINT this page.
Press the ENTER key to continue.

!

DISPLAY sedimentation info

CONCLUSION

The decreasing flow rates in the toe drainage system may be due to sedimentation of the reservoir.

Sedimentation is not a safety issue and therefore does not require any action from the standpoint of seepage/leakage control.

RECOMMENDATION

Take soundings in the reservoir to verify this conclusion and update reservoir storage capacity records.

Press the F7 key to PRINT this page.
Press the ENTER key to continue.
!
DISPLAY clogged drains info

CONCLUSION

The decreasing flow rates in the toe drainage system may be due to clogged drains or filters caused by internal piping, or they may be due to clogged relief wells.

RECOMMENDATION

Evaluate the current efficiency of the existing relief wells in the toe drainage system.

If there has been an appreciable decrease in the efficiency of the relief wells, they should be rehabilitated by a chemical treatment or horizontal jetting.

If the relief wells are not the problem, then install additional internal drainage such as, finger or trench drains.

Press the F7 key to PRINT this page.
Press the ENTER key to continue.
!
DISPLAY Unable to determine cause

CONCLUSION

DAMSEAL was unable to determine the cause of the changed flow rates in the toe drainage system from the information given and its knowledge.

Press the F7 key to PRINT this page.
Press the ENTER key to continue.

!
DISPLAY No knowledge

CONCLUSION

DAMSEAL does not have any knowledge about flow rate changes in the toe drainage system for concrete or roller concrete dams. Therefore, DAMSEAL was unable to determine the cause of the changed flow rates in the toe drainage system from the information given and its knowledge.

Press the F7 key to PRINT this page.
Press the ENTER key to continue.

!
! TEXT SECTION
!
TEXT Changes in the flow rate
Are there changes in the flow rates of the toe drainage collection system, which are unrelated to pool level changes?

!
TEXT Flow rate change

How have the flow rates in the drainage collection system changed?

!
TEXT Increased piezometric levels in embankment

Have the piezometric levels in the embankment increased while the flow rates in the toe drainage system decreased?

!
END

APPENDIX F

DH KNOWLEDGE BASE PRINTOUT

```
TITLE  Holes or Depressions DISPLAY
```

HOLES

This knowledge base of DAMSEAL will help you in ascertaining the cause of the holes or depressions occurring at your dam.

```
Press the ENTER key to continue.
!
!
!  SHARED INCLUDE FILE
!
$  SHAREFIL.PRL
!
!OBJECT Determine cause of seepage
SUPPRESS ALL
CONFIDENCE OFF
GOALSELECT OFF
!
!  GOALS
!
1. Determine cause of seepage
   1.1 Continue
2. Unable to determine cause of seepage
!
!  rules for embankment
!
RULE to determine holes on embankment are related to dispersive soil
IF   Type of dam IS earth embankment
AND  Location of holes IS embankment
AND  Random location of embankment holes
AND  Inclination of holes IS vertical
AND  Description of holes
THEN Determine cause of seepage IS dispersive soil
AND  DISPLAY dispersive soil info
!
RULE to determine holes on embankment are related to piping conduit
IF   Type of dam IS earth embankment
OR   Type of dam IS rockfilled
AND  Location of holes IS embankment
AND  NOT Random location of embankment holes
AND  Location of holes is over a conduit
THEN Determine cause of seepage IS piping conduit
AND  DISPLAY piping conduit info
!
RULE to determine holes on embankment are related to structural inadequacy
IF   Type of dam IS earth embankment
OR   Type of dam IS rockfilled
AND  Location of holes IS embankment
```

```
AND  NOT Random location of embankment holes
AND  Location of holes is along structural interface
THEN Determine cause of seepage IS structural
AND  DISPLAY structural info
!
RULE to determine holes on embankment are sinkholes
IF   Type of dam IS earth embankment
OR   Type of dam IS rockfilled
AND  Location of holes IS embankment
AND  Random location of embankment holes
AND  Inclination of holes IS vertical
AND  Soil carried into hole
AND  The foundation is fractured rock
THEN Determine cause of seepage IS sinkhole embankment
AND  DISPLAY sinkhole embankment info
AND  PAINT COE25.PIC
AND  PAINT COE23.PIC
!
RULE to determine holes on embankment are related to animals
IF   Type of dam IS earth embankment
OR   Type of dam IS concrete or roller compacted concrete
OR   Type of dam IS rockfilled
AND  Location of holes IS embankment
AND  Random location of embankment holes
AND  Inclination of holes IS horizontal
AND  Mounds of soil around holes
AND  Burrowing animals in area
OR   NOT Burrowing animals in area
THEN Determine cause of seepage IS animal holes
AND  DISPLAY animal holes info
!
RULE to determine holes on embankment are related to a leaky blanket
IF   Type of dam IS earth embankment
OR   Type of dam IS concrete or roller compacted concrete
OR   Type of dam IS rockfilled
AND  Location of holes IS embankment
AND  Random location of holes on upstream side
AND  There is an upstream blanket
THEN Determine cause of seepage IS leaky blanket
AND  DISPLAY leaky blanket info
AND  PAINT COE12.PIC
AND  PAINT COE24.PIC
!
RULE to determine holes on embankment are related to bad materials
IF   Type of dam IS earth embankment
AND  Location of holes IS embankment
AND  Random location of embankment holes
AND  Inclination of holes IS no general direction
AND  Holes have a limited areal extent
THEN Determine cause of seepage IS bad materials
AND  DISPLAY bad materials info
!
```

```
RULE to determine holes on embankment are related to inadequate features
IF   Type of dam IS earth embankment
OR   Type of dam IS rockfilled
AND  Location of holes IS embankment
AND  Random location of embankment holes
AND  NOT Holes have a limited areal extent
AND  The foundation is fractured rock
THEN Determine cause of seepage IS inadequate features
AND  DISPLAY inadequate features info
AND  PAINT COE25.PIC
AND  PAINT COE23.PIC
!
RULE to determine holes on embankment are related to an earthquake
IF   Type of dam IS earth embankment
OR   Type of dam IS rockfilled
AND  Location of holes IS embankment
AND  Random location of embankment holes
AND  A recent earthquake
AND  The foundation is soil
THEN Determine cause of seepage IS earthquake
AND  DISPLAY earthquake info
!
!  rules for abutment
!
RULE to determine holes on abutment are related to animals
IF   Type of dam IS earth embankment
OR   Type of dam IS concrete or roller compacted concrete
OR   Type of dam IS rockfilled
AND  Location of holes IS abutment
AND  Random location of abutment holes
AND  Mounds of soil around holes
AND  Burrowing animals in area
OR   NOT Burrowing animals in area
THEN Determine cause of seepage IS animal holes
AND  DISPLAY animal holes info
!
RULE to determine holes on abutment are sinkholes
IF   Type of dam IS earth embankment
OR   Type of dam IS concrete or roller compacted concrete
OR   Type of dam IS rockfilled
AND  Location of holes IS abutment
AND  Random location of abutment holes
AND  Soil carried into hole
AND  The abutment is fractured rock
THEN Determine cause of seepage IS sinkhole abutment
AND  DISPLAY sinkhole abutment info
AND  PAINT COE23.PIC
!
!  rules for foundation
!
RULE to determine holes on foundation are related to the toe drainage system
IF   Type of dam IS earth embankment
```

```
OR   Type of dam IS concrete or roller compacted concrete
OR   Type of dam IS rockfilled
AND  Location of holes IS foundation
AND  NOT Random location of foundation holes
AND  Location of holes is in vicinity of toe drainage system
THEN Determine cause of seepage IS toe drainage system
AND  DISPLAY toe drainage system info
AND  PAINT COE4.PIC
AND  PAINT COE8.PIC
AND  PAINT COE10.PIC
AND  PAINT COE20.PIC
!
RULE to determine holes on foundation are related to a relief well
IF   Type of dam IS earth embankment
OR   Type of dam IS concrete or roller compacted concrete
OR   Type of dam IS rockfilled
AND  Location of holes IS foundation
AND  NOT Random location of foundation holes
AND  Location of holes is in vicinity of relief wells
THEN Determine cause of seepage IS relief wells
AND  DISPLAY relief well info
AND  PAINT COE20.PIC
!
RULE to determine holes on foundation are related to a leaky blanket
IF   Type of dam IS earth embankment
OR   Type of dam IS concrete or roller compacted concrete
OR   Type of dam IS rockfilled
AND  Location of holes IS foundation
AND  Random location of holes on upstream side
AND  There is an upstream blanket
THEN Determine cause of seepage IS leaky blanket
AND  DISPLAY leaky blanket info foundation
AND  PAINT COE5.PIC
!
RULE to determine holes on foundation are sinkholes
IF   Type of dam IS earth embankment
OR   Type of dam IS concrete or roller compacted concrete
OR   Type of dam IS rockfilled
AND  Location of holes IS foundation
AND  Random location of foundation holes
AND  Soil carried into hole
AND  The foundation is fractured rock
THEN Determine cause of seepage IS sinkhole foundation
AND  DISPLAY sinkhole foundation info
AND  PAINT COE25.PIC
AND  PAINT COE23.PIC
!
RULE to determine holes on foundation are due to settling
IF   Type of dam IS earth embankment
OR   Type of dam IS concrete or roller compacted concrete
OR   Type of dam IS rockfilled
AND  Location of holes IS foundation
```

```
AND  Random location of foundation holes
AND  Soil carried into hole
AND  The foundation is soil
THEN Determine cause of seepage IS settling
AND  DISPLAY settling info
!
RULE to determine holes on foundation are related to animals
IF   Type of dam IS earth embankment
OR   Type of dam IS concrete or roller compacted concrete
OR   Type of dam IS rockfilled
AND  Location of holes IS foundation
AND  Random location of foundation holes
AND  Mounds of soil around holes
AND  Burrowing animals in area
OR   NOT Burrowing animals in area
THEN Determine cause of seepage IS animal holes
AND  DISPLAY animal holes info
!
RULE to determine holes on embankment are related to an earthquake
IF   Type of dam IS earth embankment
OR   Type of dam IS concrete or roller compacted concrete
OR   Type of dam IS rockfilled
AND  Location of holes IS foundation
AND  Random location of foundation holes
AND  A recent earthquake
AND  The foundation is soil
THEN Determine cause of seepage IS earthquake
AND  DISPLAY earthquake info
!
RULE to determine holes are related to improper abutment treatment
IF   Type of dam IS earth embankment
OR   Type of dam IS concrete or roller compacted concrete
OR   Type of dam IS rockfilled
AND  Location of holes IS embankment_abutment interface
AND  Observed any sudden changes
THEN Determine cause of seepage IS improper abutment treatment
AND  DISPLAY improper abutment treatment info
!
RULE to chain to the next knowledge base
IF   Determine cause of seepage IS improper abutment treatment
OR   Determine cause of seepage IS animal holes
OR   Determine cause of seepage IS sinkhole embankment
OR   Determine cause of seepage IS dispersive soil
OR   Determine cause of seepage IS piping conduit
OR   Determine cause of seepage IS structural
OR   Determine cause of seepage IS bad materials
OR   Determine cause of seepage IS inadequate features
OR   Determine cause of seepage IS earthquake
OR   Determine cause of seepage IS leaky blanket
OR   Determine cause of seepage IS sinkhole abutment
OR   Determine cause of seepage IS settling
OR   Determine cause of seepage IS relief wells
```

```
OR   Determine cause of seepage IS toe drainage system
OR   Determine cause of seepage IS sinkhole foundation
THEN Continue
AND  FORGET Seepage is related to holes
AND  NOT Seepage is related to holes
AND  CHAIN DC.KNB
ELSE Unable to determine cause of seepage
AND  DISPLAY Unable to determine cause
AND  FORGET Seepage is related to holes
AND  NOT Seepage is related to holes
AND  CHAIN DC.KNB
!
!  DISPLAY SECTION
!
DISPLAY improper abutment treatment info
```

CONCLUSION

The holes or depressions at the abutment/embankment interface may be due to hydraulic fracturing resulting from poor or inadeqaute abutment preparation.

RECOMMENDATION

An immediate reduction in pool level should be considered to evaluate the problem.

Contact the [Division name] Foundation and Material Branch.

Press the F7 key to PRINT this page.
Press the ENTER key to continue.
!
DISPLAY animal holes info

CONCLUSION

The holes were probably made by animals.

RECOMMENDATION

The holes should be filled and compacted with an impervious material. Where practical, the animals should be trapped and relocated. If relocation is not possible, or practical, preventative measures, such as wire mesh or riprap, should be used to discourage the burrowing activities in the vicinity of the dam.
Press the F7 key to PRINT this page.
Press the ENTER key to continue.
!
DISPLAY sinkhole embankment info

CONCLUSION

The holes or depressions on the embankment are probably caused by embankment

materials transported into voids in the foundation.

RECOMMENDATION

Flow through the foundation rock must be reduced and the voids filled. A positive upsteam cutoff, such as a slurry wall or concrete cutoff wall, is recommended for reducing the underseepage.

In addition, the foundation, particularly in the areas of the suspected seepage path, should be grouted to fill the voids and to reduce the permeability.

Remedial actions are illustrated on the following screens.

Press the F7 key to PRINT this page.
Press the ENTER key to continue.
!
DISPLAY dispersive soil info

CONCLUSION

The holes on the embankment are probably due to piping of dispersive soil.

RECOMMENDATION

The soil in the area of the holes needs to be lime stabilized. It is recommended that a shallow layer of filter material be placed at the bottom of the hole (after stabilization) and the hole(s) be filled and compacted with an impervious backfill.

Press the F7 key to PRINT this page.
Press the ENTER key to continue.
!
DISPLAY sinkhole abutment info

CONCLUSION

The holes or depressions on the abutment of the dam are probably due to collapse of the overburden into solutioned, soluable, or highly fractured foundation materials.

RECOMMENDATION

Flow through the foundation rock must be reduced and the voids filled. A positive upsteam cutoff, such as a slurry wall or concrete cutoff wall, is recommended for reducing the underseepage.

In addition, the foundation, particularly in the areas of the suspected seepage path, should be grouted to fill the voids and to reduce the permeability.

A remedial action is illustrated on the following screen.

Press the F7 key to PRINT this page.
Press the ENTER key to continue.
!
DISPLAY sinkhole foundation info

CONCLUSION

The holes or depressions on the foundation of the dam are probably due to collapse of the overburden into solutioned, soluable, or highly fractured foundation materials.

RECOMMENDATION

Flow through the foundation rock must be reduced and the voids filled. A positive upsteam cutoff, such as a slurry wall or concrete cutoff wall, is recommended for reducing the underseepage.

In addition, the foundation, particularly in the areas of the suspected seepage path, should be grouted to fill the voids and to reduce the permeability.

Remedial actions are illustrated on the following screens.
Press the F7 key to PRINT this page.
Press the ENTER key to continue.
!
DISPLAY piping conduit info

CONCLUSION

The holes or depressions on the embankment over or around the pipe or conduit are probably due to piping along the pipe/conduit because of boundary seepage along the pipe/conduit, or because of a leaky or rusted conduit or pipe.

RECOMMENDATION

The pipe or conduit must be repaired or replaced to eliminate the seepage path along the outside surface.

Grout the perimeter around the conduit to prevent additional movement and to seal the seepage path. Any displaced joints should be resealed and refinished, if possible, to provide a smooth hydraulic surface.

Press the F7 key to PRINT this page.
Press the ENTER key to continue.
!
DISPLAY structural info

CONCLUSION

The holes near the structural interface (wing wall, etc.) are probably due to

piping through backfill which is insufficiently compacted.

RECOMMENDATION

The holes or depressions should be backfilled and compacted. The seepage path at the structural interface should be repaired by either grouting the interface or by excavating and placing filter material between the backfill and the structure.

Press the F7 key to PRINT this page.
Press the ENTER key to continue.
!
DISPLAY bad materials info

CONCLUSION

The holes or depressions in the embankment are probably due to the inappropriate selection of embankment material (e.g., broadly graded soil) or to coarsely graded rockfill left in the embankment.

RECOMMENDATION

The area beneath and around the holes should be probed or drilled to determine if any voids are present. If any are detected they should be filled by placement or injection of sand. The holes should then be repaired (backfilled) with an impervious material.

Press the F7 key to PRINT this page.
Press the ENTER key to continue.
!
DISPLAY inadequate features info

CONCLUSION

The holes or depressions in the embankment are probably due to inadequate core filters or inadequate cutoff, or to inadequate foundation preparation.

RECOMMENDATION

Flow through the foundation rock must be reduced and the voids filled. A positive upsteam cutoff, such as a slurry wall or concrete cutoff wall, is recommended for reducing the underseepage.

In addition, the foundation, particularly in the areas of the suspected seepage path, should be grouted to fill the voids and to reduce the permeability.

Remedial actions are illustrated on the following screens.

Press the F7 key to PRINT this page.
Press the ENTER key to continue.
!
DISPLAY earthquake info

CONCLUSION

The strong motion of the earthquake probably triggered large deformations in lenses of liquifiable foundation material, thus causing the holes or depressions in the vicinity of the dam.

RECOMMENDATION

Since apparent deformations occurred in the foundation, the entire dam should be closely inspected for other signs of distress. The holes or depressions should be backfilled and compacted and monitored for any future settlement or movement.

Press the F7 key to PRINT this page.
Press the ENTER key to continue.
!
DISPLAY leaky blanket info

CONCLUSION

The holes upstream of the dam are probably due to piping of the upstream blanket into improperly graded foundation materials or into a foundation with cavities/fissures/fractures.

RECOMMENDATION

The upstream blanket must be repaired/extended or an impervious membrane placed on the upstream face of the dam. To repair the blanket the pool should be reduced to expose the upstream toe of the dam and the blanket should be both thickened and extended. If a membrane is used, consideration should be given to keying the upstream end into a positive cutoff wall, as shown in the following figures.

Press the F7 key to PRINT this page.
Press the ENTER key to continue.
!
DISPLAY leaky blanket info foundation

CONCLUSION

The holes upstream of the dam are probably due to piping of the upstream blanket into improperly graded foundation materials or into a foundation with cavities/fissures/fractures.

RECOMMENDATION

The upstream blanket must be repaired/extended. To repair the blanket the pool should be reduced to expose the upstream toe of the dam and the blanket should be both thickened and extended.

Press the F7 key to PRINT this page.
Press the ENTER key to continue.
!
DISPLAY settling info

CONCLUSION

The holes or depressions on the dam foundation are probably due to settlement or consolidation of lenses of weak foundation material or they may be due to decaying organic matter in the foundation.

RECOMMENDATION

Backfill and compact the holes or depressions with impervious material and monitor the situation for any future movement.

If the holes reappear, consideration should be given to consolidation grouting of the foundation in the affected area.

Press the F7 key to PRINT this page.
Press the ENTER key to continue.
!
DISPLAY relief well info

CONCLUSION

The holes or depressions near a relief well are probably due to piping of the well filter and/or the foundation material because of an inappropriate filter or because of a deteriorated well screen.

RECOMMENDATION

Backfill the damaged well with sand.

Install a new relief well with a graded filter adjacent to the old well to prevent further piping of foundation materials.

A typical relief well is illustrated on the next screen.

Press the F7 key to PRINT this page.
Press the ENTER key to continue.
!
DISPLAY toe drainage system info

CONCLUSION

The holes or depressions near the toe are probably due to a collapse of the toe drainage system or to a failure of a joint in a pipe.

RECOMMENDATION

The toe drainage system must be repaired or replaced in order to accomodate the through seepage and prevent an increase in piezometric levels within the dam.

Alternatively, relief wells can be installed in the affected area to intercept the flow increase caused by the damaged drain.

Remedial actions are illustrated on the following screens.

Press the F7 key to PRINT this page.
Press the ENTER key to continue.
!
DISPLAY Unable to determine cause

CONCLUSION

DAMSEAL was unable to determine the cause of the holes or depressions from the information given and its knowledge.

Press the F7 key to PRINT this page.
Press the ENTER key to continue.
!
! TEXT SECTION
!

TEXT Location of holes

Where are the holes or depressions located?

Note that the foundation includes the toe, and any trench drains or pipe drains at the toe.

!
TEXT Random location of embankment holes

Are the holes or depressions on the embankment randomly located? (i.e., not associated with a structural feature such as abutment/embankment interface, conduit, etc.)

!
TEXT Mounds of soil around holes

Is there evidence of mounds of excavated soil around the holes or depressions?

!
TEXT Inclination of holes

Do the holes on the embankment appear to have a general horizontal or vertical inclination?

!
TEXT Burrowing animals in area

Have burrowing animals been observed in the vicinity of the dam?

!
TEXT Random location of abutment holes

Are the holes or depressions on the abutment randomly located? (i.e., not associated with a structural feature such as a relief well, trenched drain, etc.)

!
TEXT Random location of foundation holes

Are the holes or depressions on the foundation randomly located? (i.e., not associated with a structural feature such as a relief well, trenched drain, etc.)
!
TEXT Soil carried into hole

Does the material in the hole appear to have been carried down into the hole or depression rather than having been excavated?
!
TEXT The foundation is fractured rock

Is the foundation of the dam solutioned, soluable, or highly fractured rock?

!

TEXT The abutment is fractured rock

Is the abutment of the dam solutioned, soluable, or highly fractured rock?

!
TEXT Description of holes

Do the holes appear as a vertical pipe connected to a lower horizontal pipe, possibly with a small delta at the outlet?

!
TEXT Location of holes is over a conduit

Are the holes or depressions located over a pipe or conduit?

!
TEXT Location of holes is along structural interface

Are the holes or depressions associated with a spillway wingwall or any other concrete structural interface?

!
TEXT Holes have a limited areal extent

Do the holes or depressions appear to have a limited areal extent?

!
TEXT A recent earthquake

Has there been a recent moderate to severe earthquake? (i.e, within the last several minutes)
!
TEXT The foundation is soil

Is the foundation of the dam silty/sandy soil?

!
TEXT Random location of holes on upstream side

Are the holes or depressions located on the upstream side of the embankment?

!
TEXT There is an upstream blanket

Is there an upstream blanket?

!
TEXT Location of holes is in vicinity of relief wells

Are there holes or depressions associated with relief wells?

!

TEXT Location of holes is in vicinity of toe drainage system

Are there holes or depressions associated with a trenched drain or pipe drain near the toe?

!
TEXT Observed any sudden changes

Have you observed any of the following:

Holes appearing suddenly.
Turbid seepage emerging near the toe of the abutment.
Seepage rate increasing near the toe of the abutment.

!
END

APPENDIX G

DMM KNOWLEDGE BASE PRINTOUT

```
TITLE  Mass Movement DISPLAY
```

MASS

MOVEMENT

This knowledge base of DAMSEAL will help you in ascertaining the cause of the mass movements at your dam.

```
Press the ENTER key to continue.
!
!
!  SHARED INCLUDE FILE
!
$  SHAREFIL.PRL
!
!OBJECT Determine cause of seepage
SUPPRESS ALL
CONFIDENCE OFF
GOALSELECT OFF
!
!  GOALS
!
1. Determine cause of seepage
   1.1 Continue
2. Unable to determine cause of seepage
!
!  rules for embankment
!
RULE to determine mass movement caused by settlement
IF   Type of dam IS earth embankment
OR   Type of dam IS rockfilled
AND  Location of mass movement IS embankment
AND  Mass movement IS a sag in the crest, misaligned guard rails, etc
OR   Mass movement IS longitudinal, transverse shrinkage or settlement cracks
AND  NOT Wet spots on the embankment
THEN Determine cause of seepage IS settlement  CF 90
AND  DISPLAY settlement info
!
RULE to determine mass movement caused by faulty slope
IF   Type of dam IS earth embankment
AND  Location of mass movement IS embankment
AND  Mass movement IS progressive sloughing on the downstream slope
AND  Dam has been recently constructed and filled
AND  There is seepage at the toe
THEN Determine cause of seepage IS faulty slope
AND  DISPLAY faulty slope info 1
AND  PAINT COE6.PIC
AND  DISPLAY faulty slope info 2
```

```
AND  PAINT COE5.PIC
AND  PAINT COE25.PIC
!
RULE to determine mass movement caused by excess pore pressure
IF   Type of dam IS earth embankment
AND  Location of mass movement IS embankment
AND  Mass movement IS a shallow slough or slump on the upstream slope
AND  A rapid drawdown of the pool
THEN Determine cause of seepage IS excess pore pressure
AND  DISPLAY excess pore pressure info
!
RULE to determine mass movement caused by insufficient drainage
IF   Type of dam IS earth embankment
AND  Location of mass movement IS embankment
AND  Mass movement IS a sag in the crest, misaligned guard rails, etc
OR   Mass movement IS arc shaped crack
OR   Mass movement IS progressive sloughing on the downstream slope
OR   Mass movement IS a shallow slough or slump on the downstream slope
OR   Mass movement IS a massive slide on the downstream slope
AND  High piezometric level in embankment
AND  NOT A recent earthquake
THEN Determine cause of seepage IS insufficient drainage CF 99
AND  DISPLAY insufficient drainage info 1
AND  PAINT COE24.PIC
AND  PAINT COE23.PIC
AND  DISPLAY insufficient drainage info 2
AND  PAINT COE4.PIC
AND  PAINT COE8.PIC
AND  PAINT COE20.PIC
!
RULE to determine mass movement caused by a weak embankment
IF   Type of dam IS earth embankment
AND  Location of mass movement IS embankment
AND  Mass movement IS a massive slide on the downstream slope
AND  High piezometric level in embankment
AND  NOT A recent earthquake
AND  There are suspended solids in seepage
THEN Determine cause of seepage IS weak embankment CF 100
AND  DISPLAY weak embankment info
AND  PAINT COE24.PIC
AND  PAINT COE5.PIC
AND  PAINT COE23.PIC
AND  PAINT COE25.PIC
!
RULE to determine mass movement caused by loss of material
IF   Type of dam IS earth embankment
OR   Type of dam IS rockfilled
AND  Location of mass movement IS embankment
AND  Mass movement IS a sag in the crest, misaligned guard rails, etc
OR   Mass movement IS longitudinal, transverse shrinkage or settlement cracks
AND  NOT Wet spots on the embankment
AND  The foundation is fractured rock
```

```
THEN Determine cause of seepage IS loss of material  CF 100
AND  DISPLAY loss of material info
AND  PAINT COE25.PIC
AND  PAINT COE23.PIC
!
RULE to determine mass movement on embankment caused by earthquake
IF   Type of dam IS earth embankment
AND  Location of mass movement IS embankment
AND  Mass movement IS a sag in the crest, misaligned guard rails, etc
OR   Mass movement IS arc shaped crack
OR   Mass movement IS longitudinal, transverse shrinkage or settlement cracks
OR   Mass movement IS a shallow slough or slump on the downstream slope
OR   Mass movement IS a shallow slough or slump on the upstream slope
OR   Mass movement IS a massive slide on the downstream slope
AND  A recent earthquake
THEN Determine cause of seepage IS earthquake
AND  DISPLAY earthquake info
!
RULE to determine remedy for cracks on a concrete dam
IF   Type of dam IS concrete or roller compacted concrete
AND  Location of mass movement concrete IS dam
AND  Structural cracks in the dam
AND  NOT Wet areas on the dam
THEN Determine cause of seepage IS monitor cracks
AND  DISPLAY monitor cracks info
!
RULE to determine remedy for cracks on a concrete dam
IF   Type of dam IS concrete or roller compacted concrete
AND  Location of mass movement concrete IS dam
AND  Structural cracks in the dam
AND  Wet areas on the dam
THEN Determine cause of seepage IS monitor cracks
AND  DISPLAY monitor wet cracks info
!
!  rules for abutment
!
RULE to determine mass movement on abutment caused by earthquake
IF   Type of dam IS earth embankment
OR   Type of dam IS rockfilled
AND  Location of mass movement IS abutment
AND  A recent earthquake
THEN Determine cause of seepage IS earthquake
AND  DISPLAY earthquake info
!
RULE to determine mass movement on abutment caused by earthquake
IF   Type of dam IS concrete or roller compacted concrete
AND  Location of mass movement concrete IS abutment
AND  A recent earthquake
THEN Determine cause of seepage IS earthquake
AND  DISPLAY earthquake info
!
RULE to determine no mass movement
```

```
IF   Type of dam IS earth embankment
OR   Type of dam IS rockfilled
AND  Location of mass movement IS abutment
OR   Location of mass movement IS embankment
AND  Mass movement IS none observed
THEN Determine cause of seepage IS not known
!
RULE to determine no mass movement
IF   Type of dam IS concrete or roller compacted concrete
AND  Location of mass movement concrete IS abutment
AND  NOT A recent earthquake
THEN Determine cause of seepage IS not known
!
!  rules for foundation
!
RULE to determine mass movement caused by heave of toe
IF   Type of dam IS earth embankment
OR   Type of dam IS concrete or roller compacted concrete
OR   Type of dam IS rockfilled
AND  Location of mass movement IS foundation
AND  Seepage near heave at toe
AND  High piezometric level in foundation
THEN Determine cause of seepage IS foundation heave
AND  DISPLAY uplift toe
AND  PAINT COE20.PIC
!
RULE to determine mass movement caused by faulty slope
IF   Type of dam IS earth embankment
OR   Type of dam IS concrete or roller compacted concrete
OR   Type of dam IS rockfilled
AND  Location of mass movement IS foundation
AND  Seepage near heave at toe
AND  NOT High piezometric level in foundation
AND  Dam has been recently constructed and filled
THEN Determine cause of seepage IS faulty slope
AND  DISPLAY faulty slope info foundation 1
AND  PAINT COE6.PIC
AND  DISPLAY faulty slope info foundation 2
AND  PAINT COE5.PIC
AND  PAINT COE25.PIC
!
RULE to determine mass movement caused by beginning of slide
IF   Type of dam IS earth embankment
OR   Type of dam IS concrete or roller compacted concrete
OR   Type of dam IS rockfilled
AND  Location of mass movement IS foundation
AND  Seepage near heave at toe
AND  NOT High piezometric level in foundation
AND  NOT Dam has been recently constructed and filled
AND  High piezometric level in embankment
THEN Determine cause of seepage IS beginning of slide
AND  DISPLAY beginning of slide info
```

```
AND  PAINT COE24.PIC
AND  PAINT COE5.PIC
AND  PAINT COE23.PIC
AND  PAINT COE25.PIC
!
RULE to determine mass movement caused by earthquake
IF   Type of dam IS earth embankment
OR   Type of dam IS concrete or roller compacted concrete
OR   Type of dam IS rockfilled
AND  Location of mass movement IS foundation
AND  Seepage near heave at toe
AND  NOT High piezometric level in foundation
AND  NOT Dam has been recently constructed and filled
AND  NOT High piezometric level in embankment
AND  A recent earthquake
THEN Determine cause of seepage IS earthquake
AND  DISPLAY earthquake info foundation
!
RULE to determine mass movement caused by earthquake
IF   Type of dam IS earth embankment
OR   Type of dam IS concrete or roller compacted concrete
OR   Type of dam IS rockfilled
AND  Location of mass movement IS foundation
AND  NOT Seepage near heave at toe
AND  NOT High piezometric level in embankment
AND  A recent earthquake
THEN Determine cause of seepage IS earthquake
AND  DISPLAY earthquake info foundation
!
RULE to determine mass movement caused by beginning of slide
IF   Type of dam IS earth embankment
OR   Type of dam IS concrete or roller compacted concrete
OR   Type of dam IS rockfilled
AND  Location of mass movement IS foundation
AND  NOT Seepage near heave at toe
AND  High piezometric level in embankment
THEN Determine cause of seepage IS beginning of slide
AND  DISPLAY beginning of slide info
AND  PAINT COE24.PIC
AND  PAINT COE5.PIC
AND  PAINT COE23.PIC
AND  PAINT COE25.PIC
!
RULE to chain to the next knowledge base
IF   Determine cause of seepage IS weak embankment
OR   Determine cause of seepage IS insufficient drainage
OR   Determine cause of seepage IS excess pore pressure
OR   Determine cause of seepage IS faulty slope
OR   Determine cause of seepage IS earthquake
OR   Determine cause of seepage IS monitor cracks
OR   Determine cause of seepage IS settlement
OR   Determine cause of seepage IS loss of material
```

```
OR   Determine cause of seepage IS foundation heave
OR   Determine cause of seepage IS beginning of slide
THEN Continue
AND  FORGET Seepage is related to mass movement
AND  NOT Seepage is related to mass movement
AND  CHAIN DC.KNB
ELSE Unable to determine cause of seepage
AND  DISPLAY Unable to determine cause
AND  FORGET Seepage is related to mass movement
AND  NOT Seepage is related to mass movement
AND  CHAIN DC.KNB
!
!  DISPLAY SECTION
!
DISPLAY weak embankment info
```

CONCLUSION

The massive slide is probably due to a decrease in shear strength caused by the decrease in effective stress from the high seepage pressures. Since materials are apparently being lost from the embankment, poor or inappropriate embankment zonation may be causing the problem.

RECOMMENDATION

The high piezometric levels must be reduced in the embankment, and preferrably at the seepage entrance. An upstream membrane, blanket, or positive cutoff is recommended. In addition, consideration may be given to the placement of a downstream berm to increase the safety factor of the slope after the slide has been repaired.

Information on these remedial actions are illustrated on the following screens.

Press the F7 key to PRINT this page.
Press the ENTER key to continue.

```
!
DISPLAY insufficient drainage info 1
```

CONCLUSION

The cracks/slides/bulges/sags or misaligned structures on the embankment are probably caused by inadequate strength due to a reduction in effective stress caused by high seepage pressures.

RECOMMENDATION

The seepage pressures have to be reduced by either improving the upstream cutoff or enhancing the internal drainage. Normally, the pool level should be reduced and an upstream membrane/blanket or positive cutoff should be installed. Information on this remedial action is illustrated on the following screens.

Press the F7 key to PRINT this page.
Press the ENTER key to continue.
!
DISPLAY insufficient drainage info 2

RECOMMENDATION

If pool reduction and upstream repairs are impractical, the toe drainage system should be improved to enhance the internal drainage. In this case, additional relief wells or filter drains are recommended.

Information on this remedial action is illustrated on the following screens.

Press the F7 key to PRINT this page.
Press the ENTER key to continue.
!
DISPLAY excess pore pressure info

CONCLUSION

The shallow sloughs on the embankment are probably due to excess pore pressures and decreases in effective stress. This is not normally considered to be a dam safety problem unless the sloughing is deep and progressive.

RECOMMENDATION

Remedial actions should be taken to repair the damaged area and the repairs should be monitored for future signs of distress.

If future rapid drawdowns are anticipated, consider installing a weighted pervious blanket on the upstream slope to assist in stabilization during these periods.

Press the F7 key to PRINT this page.
Press the ENTER key to continue.
!
DISPLAY faulty slope info 1

CONCLUSION

The progressive sloughing on the downstream slope of the embankment is probably due to too steep a slope or to decreases in effective stress and shear strength because of seepage pressures. Another possibility is settlement caused by saturation, possibly related to poor construction.

RECOMMENDATION

Flatten the downstream slope or add a sloping weighted filter berm to stabilize the slope until excess pore/seepage pressures dissipate.

Information on this remedial action is illustrated on the following screen.

Press the F7 key to PRINT this page.
Press the ENTER key to continue.
!
DISPLAY faulty slope info 2

RECOMMENDATION

Or, monitor the piezometric levels within the embankment and if they appear to be excessive and tied to the reservoir pool levels, improve the upstream cutoff measures with either an upstream blanket or trench cutoff.

Information on this remedial action is illustrated on the following screens.

Press the F7 key to PRINT this page.
Press the ENTER key to continue.
!
DISPLAY faulty slope info foundation 1

CONCLUSION

The heave at the toe of the downstream slope of the embankment may be due to sloughs cause by too steep a slope or to decreases in effective stress and shear strength because of seepage pressures. Another possibility is settlement caused by saturation, possibly related to poor construction.

RECOMMENDATION

Flatten the downstream slope or add a sloping weighted filter berm to stabilize the slope until excess pore/seepage pressures dissipate.

Information on this remedial action is illustrated on the following screen.

Press the F7 key to PRINT this page.
Press the ENTER key to continue.
!
DISPLAY faulty slope info foundation 2

RECOMMENDATION

Or, monitor the piezometric levels within the embankment and if they appear to be excessive and tied to the reservoir pool levels, improve the upstream cutoff measures with either an upstream blanket or trench cutoff.

Information on this remedial action is illustrated on the following screens.

Press the F7 key to PRINT this page.
Press the ENTER key to continue.
!
DISPLAY earthquake info

CONCLUSION

The cracks/slides/sloughs/bulges/sags or misaligned structures were probably caused by the earthquake.

RECOMMENDATION

Remedial actions should be taken to repair the damaged area or structure and the repairs should be monitored for future signs of distress. A detailed inspection of other areas and structures at [Name of dam] should be made since some damage has already been observed.

Press the F7 key to PRINT this page.
Press the ENTER key to continue.
!
DISPLAY earthquake info foundation

CONCLUSION

The heave of the toe at the downstream slope of the dam may be a result of sloughing caused by the earthquake.

RECOMMENDATION

Remedial actions should be taken to repair the damaged area and the repairs should be monitored for future signs of distress. A detailed inspection of other areas and structures at [Name of dam] should be made since some damage has already been observed.

Press the F7 key to PRINT this page.
Press the ENTER key to continue.
!
DISPLAY monitor cracks info

CONCLUSION

The cracks in the dam are probably due to shrinkage, differential movement, expansion, seismic activity, overstress, etc. At present, they may not be a seepage problem, but they could precipitate seepage in the future.

RECOMMENDATION

Determine the extent of the cracks and repair them.

Monitor, on a regular basis, for additional cracking or the development of wet areas or leakage.

The stability of the dam may require reevaluation depending upon the location and extent of the cracking.

Press the F7 key to PRINT this page.
Press the ENTER key to continue.
!
DISPLAY monitor wet cracks info

CONCLUSION

There is apparent communication between the reservoir and the crack which could indicate a serious seepage or leakage problem depending upon the quantity of seepage.

RECOMMENDATION

Locate the source (entrance) of the seepage by either lowering the pool level, or by using a controlled dye release along the upstream face. The cracks should then be sealed and repaired, or the upstream section of the dam refaced to prevent further seepage. In addition, the stability of the dam may require reevaluation depending upon the location and extent of the cracking.

Press the F7 key to PRINT this page.
Press the ENTER key to continue.
!
DISPLAY settlement info

CONCLUSION

The cracks/sags or misaligned structures on the embankment are probably due to settlement/differential settlement of the embankment and/or to foundation consolidation. The settlement by itself is not considered to be a seepage problem, but it can and may have already precipitated seepage.

RECOMMENDATION

Repair the settled area, install settlement plates and surface monuments, and monitor the area regularly to determine the location of the movement.

In addition, increase monitoring activities for seepage on the downstream slope and for fines in the toe drainage system. If either start to show an increase, damage to the core may be occurring and seepage control measures may be required. For recommendations consult DAMSEAL.

Press the F7 key to PRINT this page.
Press the ENTER key to continue.
!
DISPLAY loss of material info

CONCLUSION

The cracks/sags or misaligned structures on the embankment are probably due to loss of embankment materials into subsurface cavities/fissures or fractures. The movement by itself is not primarily a seepage problem but, it can and may have already precipitated seepage.

RECOMMENDATION

The high piezometric levels must be reduced in the foundation, and preferrably at the seepage entrance. An upstream membrane or blanket may solve the problem, but a more positive cutoff, such as a grout curtain, slurry wall, or concrete cutoff walls, is recommended.

Information on this remedial action is illustrated on the following screens.

Press the F7 key to PRINT this page.
Press the ENTER key to continue.
!
DISPLAY uplift toe

CONCLUSION

The heave near the toe is probably due to uplift from confined pervious layers.

RECOMMENDATION

Relief wells or trench drains should be installed to reduce the piezometric heads around the area of the heave.

A typical relief well installation is shown on the following screen.

Press the F7 key to PRINT this page.
Press the ENTER key to continue.
!
DISPLAY beginning of slide info

CONCLUSION

The heave of the toe at the downstream slope of the dam may be due to the beginning of a massive slide. The probable cause is a decrease in shear strength caused by the decrease in effective stress from the high seepage pressures. Since materials are apparently being lost into the toe drainage system, poor or inappropriate embankment zonation may be causing the problem.

RECOMMENDATION

The high piezometric levels must be reduced in the embankment, and preferrably at the seepage entrance. An upstream membrane, blanket, or positive cutoff is recommended. In addition, consideration should be given to the placement of a downstream berm to increase the safety factor of the downstream slope after the

slide area and heave have been repaired.

Information on these remedial actions are illustrated on the following screens.

Press the F7 key to PRINT this page.
Press the ENTER key to continue.
!
DISPLAY Unable to determine cause

CONCLUSION

DAMSEAL was unable to determine the cause of the mass movement from the information given and its knowledge.

Press the F7 key to PRINT this page.
Press the ENTER key to continue.
!
!
! TEXT SECTION
!
TEXT Location of mass movement

Where are the signs of mass movement?

on the embankment (e.g., slides, sloughs, sag in crest, bulges, cracks, misaligned guard rails, etc.)
on the abutment (e.g. slides/slumps or bulges)

on the foundation (e.g. heave of toe)

Use the UP/DOWN ARROW keys to make a selection and then press ENTER.

!
TEXT Location of mass movement concrete

Where are the signs of mass movement?
!
TEXT Mass movement

Do you see one of the following signs of mass movement?

Use the UP/DOWN ARROW keys to make a selection and then press ENTER.

!
TEXT High piezometric level in embankment

Are there unusually high piezometric levels in the embankment UNRELATED to pool level changes?

!

TEXT High piezometric level in foundation

Are there unusually high piezometric levels in the foundation UNRELATED to pool level changes?

!
TEXT A recent earthquake

Has there been a recent moderate to severe earthquake? (i.e., within the last several minutes)

!
TEXT There are suspended solids in seepage

Are there fines or suspended solids in the seepage flow from the massive slide scarp and/or in the flow through the toe drainage system?

!
TEXT A rapid drawdown of the pool

Are the shallow sloughs on the embankment associated with a rapid drawdown of the pool?

!
TEXT Dam has been recently constructed and filled

Has the dam been recently constructed and/or filled for the first time?

!
TEXT There is seepage at the toe
Is there seepage at the toe? (e.g., in the toe drainage collection system or as groundwater seepage at the toe)

!
TEXT Wet spots on the embankment

Is there clear seepage or wet/soft/quick spots on the embankment excluding the abutment/embankment interface?

!
TEXT Wet areas on the dam

Are the cracks in the dam wet?

!
TEXT The foundation is fractured rock

Is the foundation of the dam solutioned, soluable, or highly fractured rock?

!
TEXT Structural cracks in the dam

Are there structural cracks in the dam?

!
TEXT Seepage near heave at toe

Are there signs of seepage near the heave at the toe?

(e.g. wet spots or boils)
!
END

APPENDIX H

DPR KNOWLEDGE BASE PRINTOUT

TITLE High Piezometric Readings DISPLAY

HIGH

PIEZOMETRIC

This Knowledge base of DAMSEAL will help you in ascertaining the cause of the abnormally high piezometric levels at your dam.

Press the ENTER key to continue.

```
!
!
!  SHARED INCLUDE FILE
!
$  SHAREFIL.PRL
!
!OBJECT Determine cause of seepage
SUPPRESS ALL
CONFIDENCE OFF
GOALSELECT OFF
!
!  GOALS
!
1. Determine cause of seepage
   1.1 Continue
2. Unable to determine cause of seepage
!
!   rules for embankment
!
RULE to determine seepage related to plugged relief system
IF   Type of dam IS earth embankment
OR   Type of dam IS rockfilled
AND  Location of high piezometric level IS embankment
AND  Levels unrelated to pool changes
AND  High piezometric level in drains
AND  NOT Mass movement on the embankment
AND  NOT Piezometric level related to construction loading
THEN Determine cause of seepage IS plugged relief system
AND  DISPLAY plugged relief system info 1
AND  PAINT COE24.PIC
AND  DISPLAY plugged relief system info 2
AND  PAINT COE8.PIC
!
!   rules for foundation
!
RULE to determine seepage related to an inadequate blanket
IF   Type of dam IS earth embankment
OR   Type of dam IS concrete or roller compacted concrete
OR   Type of dam IS rockfilled
```

```
AND  Location of high piezometric level IS foundation
AND  Levels unrelated to pool changes
AND  There is an upstream blanket
THEN Determine cause of seepage IS inadequate blanket
AND  DISPLAY inadequate blanket info
AND  PAINT COE5.PIC
AND  PAINT COE25.PIC
!
RULE to determine seepage related to an inadequate cutoff
IF   Type of dam IS earth embankment
OR   Type of dam IS concrete or roller compacted concrete
OR   Type of dam IS rockfilled
AND  Location of high piezometric level IS foundation
AND  Levels unrelated to pool changes
AND  There is a foundation cutoff
THEN Determine cause of seepage IS inadequate cutoff
AND  DISPLAY inadequate cutoff info
AND  PAINT COE14.PIC
AND  PAINT COE25.PIC
!
!   rules for abutment
!
RULE to determine seepage related to direct hydraulic connection
IF   Type of dam IS earth embankment
OR   Type of dam IS concrete or roller compacted concrete
OR   Type of dam IS rockfilled
AND  Location of high piezometric level IS abutment
AND  Exact location on the abutment
AND  slides on the abutment
AND  NOT slides in vicinity of high piezometric level
THEN Determine cause of seepage IS direct hydraulic connection
AND  DISPLAY direct hydraulic connection info
AND  PAINT COE5.PIC
!
RULE to determine seepage related to direct hydraulic connection
IF   Type of dam IS earth embankment
OR   Type of dam IS concrete or roller compacted concrete
OR   Type of dam IS rockfilled
AND  Location of high piezometric level IS abutment
AND  Exact location on the abutment
AND  NOT slides on the abutment
THEN Determine cause of seepage IS direct hydraulic connection
AND  DISPLAY direct hydraulic connection info
AND  PAINT COE5.PIC
!
RULE to chain to the next knowledge base
IF   Determine cause of seepage IS direct hydraulic connection
OR   Determine cause of seepage IS plugged relief system
OR   Determine cause of seepage IS inadequate blanket
OR   Determine cause of seepage IS inadequate cutoff
THEN Continue
AND  FORGET Seepage is related to piezometric readings
```

```
AND  NOT Seepage is related to piezometric readings
AND  CHAIN DC.KNB
ELSE Unable to determine cause of seepage
AND  DISPLAY Unable to determine cause
AND  FORGET Seepage is related to piezometric readings
AND  NOT Seepage is related to piezometric readings
AND  CHAIN DC.KNB
!
!  DISPLAY SECTION
!
DISPLAY direct hydraulic connection info
```

CONCLUSION

The high piezometric levels in the abutment may be due to a direct hydraulic connection to the reservoir and to insufficient downstream relief.

RECOMMENDATION

Extend or add an upstream impervious blanket onto the abutment intake zone.

This is illustrated on the next screen.

Press the F7 key to PRINT this page.
Press the ENTER key to continue.
!
DISPLAY plugged relief system info 1

CONCLUSION

The high piezometric levels in the embankment may be due to inadequate internal drainage, clogged drains, abnormally wet fill, abutment leakage into the embankment, or to inadequate cutoff.

RECOMMENDATION

Add an impervious blanket or membrane on the upstream face of the dam, if one does not exist.

Information on this remedial action will be presented on the following screen.

Press the F7 key to PRINT this page.
Press the ENTER key to continue.
!
DISPLAY plugged relief system info 2

RECOMMENDATION

Add trench or finger drains if there is an existing impervious upstream blanket on the face of the dam.

Information on this remedial action will be presented on the following screen.

Press the F7 key to PRINT this page.
Press the ENTER key to continue.
!
DISPLAY inadequate blanket info

CONCLUSION

The high piezometric levels in the foundation may be due to a breach in the blanket or to an inadequate blanket.

RECOMMENDATION

Add additional impervious materials to the upstream blanket.
If this is not practical, install a slurry trench near the top of the upstream face of the dam.

Information on these two remedial actions will be presented on the following screens.

Press the F7 key to PRINT this page.
Press the ENTER key to continue.
!
DISPLAY inadequate cutoff info

CONCLUSION

The high piezometric levels in the foundation may be due to a breach in the cutoff or to an inadequate cutoff.

RECOMMENDATION

If the piezometric levels are manageable, then install additional relief wells to reduce the downstream heads.

If this proves to be inadequate, install additional positive cutoffs such as, a slurry trench.

Information on these two remedial actions will be presented on the following screens.

Press the F7 key to PRINT this page.
Press the ENTER key to continue.
!
DISPLAY Unable to determine cause

CONCLUSION

DAMSEAL was unable to relate your seepage problem with your high piezometric readings from the information given and its knowledge.

Press the F7 key to PRINT this page.
Press the ENTER key to continue.
!
! TEXT SECTION
!
TEXT Location of high piezometric level

Where are the unusually high piezometeric levels located?

!
TEXT Exact location on the abutment

Is the seepage on the abutment located downstream of the dam axis and outside of the transition zone between the abutment and the embankment?

!
TEXT Levels unrelated to pool changes

Are the high piezometric levels UNRELATED to pool level changes?

!
!TEXT wet spots on the abutment
!
!Are there clear seeps or wet/soft/quick spots on the abutment?
!
!
TEXT slides on the abutment

Are there slides/slumps/bulges on the abutment?

!
TEXT slides in vicinity of high piezometric level

Are the slides/slumps/bulges on the abutment in the vicinity of the high piezometric levels?

!
TEXT High piezometric level in drains

Are the piezometeric levels in the drains in the embankment high?

```
!
TEXT Mass movement on the embankment

Are there any signs of mass movement on the embankment? (e.g., slides, sloughs,
bulges, sag in crest, cracks, misaligned guard rails, etc.)

!
!TEXT wet spots on the embankment

!Are there clear seeps or wet/soft/quick spots on the embankment excluding the
!abutment/embankment interface?

!
TEXT Piezometric level related to construction loading

Are the high piezometric levels in the embankment related to construction
loading?

!
TEXT  There is an upstream blanket

Is there an upstream blanket?

!
TEXT  There is a foundation cutoff

Is there a foundation cutoff?

!
END
```

APPENDIX I

DTS KNOWLEDGE BASE PRINTOUT

TITLE Turbid Seepage or Seepage Carrying Fines DISPLAY

TURBID

SEEPAGE

This knowledge base of DAMSEAL will help you in ascertaining the cause of the turbid seepage at your dam.

```
Press the ENTER key to continue.
!
$ SHAREFIL.PRL
!
!OBJECT  Determine cause of seepage
SUPPRESS ALL
GOALSELECT OFF
CONFIDENCE OFF
!MULTI Embankment crack
!
!   GOALS
!
1.  Determine cause of seepage
    1.1 Continue
2.  Unable to determine cause of seepage
!
!  rules for embankment
!
RULE for seepage due to bad filter
IF   Type of dam IS earth embankment
OR   Type of dam IS rockfilled
AND  Location of turbid seepage IS embankment
AND  Seepage emerging from toe drainage system
THEN Determine cause of seepage IS pipe filter
AND  DISPLAY pipe filter info 1
AND  PAINT COE20.PIC
AND  DISPLAY pipe filter info 2
AND  PAINT COE25.PIC
!
RULE for seepage due to bad internal drainage
IF   Type of dam IS earth embankment
AND  Location of turbid seepage IS embankment
AND  Seepage emerging from downstream slope
AND  Seepage on slope randomly located
AND  High piezometric level in embankment
THEN Determine cause of seepage IS bad drain
AND  DISPLAY bad drain info
AND  PAINT COE6.PIC
```

```
AND  PAINT COE25.PIC
AND  PAINT COE8.PIC
AND  PAINT COE10.PIC
!
RULE for seepage due to bad design/construction
IF   Type of dam IS earth embankment
AND  Location of turbid seepage IS embankment
AND  Seepage emerging from downstream slope
AND  Seepage on slope randomly located
AND  NOT  High piezometric level in embankment
THEN Determine cause of seepage IS bad design
AND  DISPLAY bad design info 1
AND  PAINT COE17.PIC
AND  PAINT COE16.PIC
AND  PAINT COE21.PIC
AND  PAINT COE6.PIC
AND  PAINT COE24.PIC
AND  DISPLAY bad design info 2
AND  PAINT COE8.PIC
AND  PAINT COE10.PIC
AND  PAINT COE18.PIC
!
RULE for seepage due to bad pipe conduit
IF   Type of dam IS earth embankment
OR   Type of dam IS rockfilled
AND  Location of turbid seepage IS embankment
AND  Seepage emerging from perimeter of conduit
THEN Determine cause of seepage IS pipe conduit
AND  DISPLAY pipe conduit info
!
RULE for seepage due to bad pipe conduit
IF   Type of dam IS concrete or roller compacted concrete
AND  Seepage emerging from perimeter of conduit
THEN Determine cause of seepage IS pipe conduit
AND  DISPLAY pipe conduit info
!
RULE for seepage in area of spillway
IF   Type of dam IS earth embankment
OR   Type of dam IS rockfilled
AND  Location of turbid seepage IS embankment
AND  Seepage emerging from area of spillway
THEN Determine cause of seepage IS pipe spillway
AND  DISPLAY pipe spillway info
AND  PAINT COE20.PIC
!
RULE for seepage in area of spillway
IF   Type of dam IS concrete or roller compacted concrete
AND  Seepage emerging from area of spillway
THEN Determine cause of seepage IS pipe spillway
AND  DISPLAY pipe spillway info
AND  PAINT COE20.PIC
!
```

```
!  rules for foundation
!
RULE for seepage in relief well
IF   Type of dam IS earth embankment
OR   Type of dam IS concrete or roller compacted concrete
OR   Type of dam IS rockfilled
AND  Location of turbid seepage IS foundation
AND  Seepage appearing in a relief well
THEN Determine cause of seepage IS relief wells
AND  DISPLAY relief well info
AND  PAINT COE20.PIC
!
RULE for seepage downstream of the dam
IF   Type of dam IS earth embankment
OR   Type of dam IS concrete or roller compacted concrete
OR   Type of dam IS rockfilled
AND  Location of turbid seepage IS foundation
AND  Boils in the foundation
AND  NOT A recent earthquake
THEN Determine cause of seepage IS excessive piezometric gradients
AND  DISPLAY excessive piezometric gradients info
AND  PAINT COE5.PIC
AND  PAINT COE19.PIC
AND  PAINT COE26.PIC
!
RULE for seepage due to earthquake damage
IF   Type of dam IS earth embankment
OR   Type of dam IS concrete or roller compacted concrete
OR   Type of dam IS rockfilled
AND  Location of turbid seepage IS foundation
AND  Boils in the foundation
AND  A recent earthquake
AND  Seepage flow rate is decreasing
THEN Determine cause of seepage IS liquifaction
AND  DISPLAY liquifaction info
!
RULE to chain to the next knowledge base
IF   Determine cause of seepage IS bad design
OR   Determine cause of seepage IS bad drain
OR   Determine cause of seepage IS pipe filter
OR   Determine cause of seepage IS pipe conduit
OR   Determine cause of seepage IS pipe spillway
OR   Determine cause of seepage IS excessive piezometric gradients
OR   Determine cause of seepage IS liquifaction
OR   Determine cause of seepage IS relief wells
THEN Continue
AND  FORGET Seepage is related to turbid seepage
AND  NOT Seepage is related to turbid seepage
AND  CHAIN DC.KNB
ELSE Unable to determine cause of seepage
AND  DISPLAY Unable to determine cause
AND  FORGET Seepage is related to turbid seepage
```

```
AND  NOT Seepage is related to turbid seepage
AND  CHAIN DC.KNB
!
!   DISPLAY SECTION
!
DISPLAY bad design info 1
```

CONCLUSION

The turbid seepage on the downstream slope may be due to piping because of inadequate design/construction (e.g. too steep slope, lenses of improper material, absence of zonation, etc.)

RECOMMENDATION

If the seepage is emerging relatively low on the embankment slope, the seepage path can be increased by the addition of a filter berm on the downstream toe of the embankment. Otherwise, the seepage must be cutoff, or intercepted. A positive cutoff can be accomplished by either the addition, or repair, of an upstream impervious membrane on the embankment or by construction of a cutoff wall within the embankment.
These are illustrated on the following screens.

Press the F7 key to PRINT this page.
Press the ENTER key to continue.
!
DISPLAY bad design info 2

RECOMMENDATION

If the seepage is to be intercepted, the remedial measure depends upon the extent of the problem. If the turbid seepage is very localized, trench drains, or filtered collector pipe systems may be installed. If the seepage is extensive, an inclined drain must be installed and connected to the horizontal drainage system within the drain.

These are illustrated on the following screens.

Press the F7 key to PRINT this page.
Press the ENTER key to continue.
!
DISPLAY bad drain info

CONCLUSION

The turbid seepage on the downstream slope may be due to piping resulting from inadequate filter design, insufficient internal drainage, clogged drains or filters.

RECOMMENDATION

If the seepage is emerging relatively low on the embankment slope, the seepage path can be increased by the addition of a filter berm on the downstream toe of the embankment. Otherwise, the high (excess) piezometric levels must be reduced. This can be accomplished either within the embankment by construction of a cutoff wall or at the exit by construction of a trench drain, or filtered pipe collector system.

These are illustrated on the following screens.

Press the F7 key to PRINT this page.
Press the ENTER key to continue.
!
DISPLAY pipe filter info 1

CONCLUSION

The turbid seepage emerging through the toe drainage system may be due to piping resulting from inadequate filter design or from failure of a pipe.

RECOMMENDATION

Additional relief wells should be installed. If the turbid seepage is emerging from a relief well, the well screen and/or filter are not functioning properly and the well should be backfilled with filter material (sand). A new relief well should then be installed adjacent to the "abandoned" well.

If the turbid seepage is emerging through cracks, construction joints, or other structural features of the toe drainage system, there is an excess seepage gradient which should be reduced by adding additional relief wells in the area of the turbid seepage.

This technique is illustrated on the following screen.

Press the F7 key to PRINT this page.
Press the ENTER key to continue.
!
DISPLAY pipe filter info 2

RECOMMENDATION

If the problem is wide spread, i.e., affecting the entire toe drainage system, pool reduction should be considered with the installation of a cutoff wall in the embankment.

This technique is illustrated on the following screen.

Press the F7 key to PRINT this page.
Press the ENTER key to continue.
!
DISPLAY pipe conduit info

CONCLUSION

The turbid seepage from or around the conduit may be due to piping in improperly

graded or compacted conduit bedding/backfill, or to hydraulic fracturing of backfill adjacent to the conduit, or to voids in backfill due to overhangs and to foundation rock which was disturbed during construction, or to piping along leaky conduit or into conduit at leaky joint.

RECOMMENDATION

If the fines, or turbid seepage, are emerging from inside the conduit, then the construction joint(s) or crack(s) permitting the material access into the conduit should be sealed and the area outside the conduit grouted.

If the seepage is emerging downstream around the perimeter of the conduit, partial cutoffs, or limited grout curtains should be installed at several locations along the length of the conduit to increase the seepage path and reduce the gradient. Also, the immediate area behind the conduit should be grouted to replace any material removed by piping.

Press the F7 key to PRINT this page.
Press the ENTER key to continue.
!
DISPLAY pipe spillway info

CONCLUSION

The turbid seepage adjacent to a spillway or stilling basin slab may be due to piping because of an inadequate filter.

RECOMMENDATION

If the turbid seepage is emerging through cracks, construction joints, or other structural features of the spillway or stilling basin, there is an excess seepage gradient which should be reduced by adding additional relief wells in the area of the turbid seepage.

Alternatively, weepholes or underdrains with properly graded filters can be installed to reduce the excess seepage gradient at the structure. If voids have been created beneath, or around the structure, they should be grouted to maintain the stability of the structure.

Press the F7 key to PRINT this page.
Press the ENTER key to continue.
!
DISPLAY excessive piezometric gradients info

CONCLUSION

The turbid seepage downstream of the dam may be due to excessive piezometric gradients in the foundation.

RECOMMENDATION

Install either an upstream blanket or cutoff, if one does not already exist. If

it presently exists, it is in need of repair.

Information on these two remedial actions will be presented on the following screens.

Press the F7 key to PRINT this page.
Press the ENTER key to continue.
!
DISPLAY liquifaction info

CONCLUSION

The turbid seepage emerging from the foundation is probably due to liquifaction by the earthquake.

RECOMMENDATION

Continue to monitor the boils for decreasing flow rate and inspect the [Name of dam] for evidence of new seepage.

Press the F7 key to PRINT this page.
Press the ENTER key to continue.
!
DISPLAY relief well info

CONCLUSION

The turbid seepage in the relief well may be due to piping of the well filter and/or foundation material because of improper well filter design or because of well screen failure.

RECOMMENDATION

Additional relief wells should be installed. If the turbid seepage is emerging from a relief well, the well screen and/or filter are not functioning properly and the well should be backfilled with filter material (sand). A new relief well should then be installed adjacent to the "abandoned" well.
Press the F7 key to PRINT this page.
Press the ENTER key to continue.
!
DISPLAY Unable to determine cause

CONCLUSION

DAMSEAL was unable to determine the cause of the turbid seepage from the information given and its knowledge.

Press the F7 key to PRINT this page.

Press the ENTER key to continue.

!

! TEXT SECTION

!

TEXT Location of turbid seepage

Where is the turbid seepage located?

!

TEXT Seepage emerging from downstream slope

Is turbid seepage emerging from the downstream slope of the embankment?

!

TEXT Seepage on slope randomly located

Is the turbid seepage randomly located? (i.e. not associated with the abutment/embankment interface or any other structural feature)

!

TEXT High piezometric level in embankment

Are the piezometric levels in the embankment unusually high?

!

TEXT Seepage emerging from toe drainage system

Is turbid seepage emerging through the toe drainage system?

!

TEXT Seepage emerging from perimeter of conduit

Is the turbid seepage emerging from or around the area of a conduit?

!

TEXT Seepage emerging from area of spillway

Is the turbid seepage adjacent to the spillway or stilling basin?

!

TEXT A recent earthquake

Has there been a recent moderate to severe earthquake? (i.e., within the last several minutes)

!

TEXT Boils in the foundation

Are there boils in the foundation?

!

TEXT Seepage flow rate is decreasing

Is the flow rate of the turbid seepage on the foundation decreasing rapidly or has the flow rate just ceased?

!
TEXT Seepage appearing in a relief well

Is the turbid seepage in a relief well?

!
END

APPENDIX J

DU KNOWLEDGE BASE PRINTOUT

```
TITLE  DAMSEAL
!
!      Shared Include File
!
$ SHAREFIL.PRL
!
OPEN cdam.dbf    AS DB3 FOR READ CALLED alldams
!
!NUMERIC dam number
!STRING  date of info2
!
SUPPRESS ALL
GOALSELECT OFF
CONFIDENCE OFF
!
MULTI   Primary seepage manifestation known
!
!   GOALS
!
1.  No dam information
    1.1  Primary seepage manifestation known
         1.1.1  Seek more information
2.  Dam information located
    2.1  Primary seepage manifestation known
         2.1.1  Seek more information
!
RULE  for quitting based on bad data
IF   counter >= 3
THEN Dam information located
AND  NOT Seepage is related to boils
AND  NOT Seepage is related to damaged structures
AND  NOT Seepage is related to flow rate changes
AND  NOT Seepage is related to foundation heave
AND  NOT Seepage is related to piezometric readings
AND  NOT Seepage is related to holes
AND  NOT Seepage is related to mass movement
AND  NOT Seepage is related to turbid seepage
AND  NOT Seepage is related to wet spots
AND  FORGET Embankment crack
AND  CHAIN DC.KNB
!
RULE to offer information from cdam database
IF   No dam information
THEN Cdam data
!
RULE to offer information from cdam database
IF   Dam information located
AND  Display information from cdam database
THEN Cdam data
AND  DISPLAY cdam database 1
AND  DISPLAY cdam database 2
!
```

```
RULE to offer information from cdam database
IF   Dam information located
AND  NOT Display information from cdam database
THEN Cdam data
!
RULE for determining type of dam from user
IF   Type of dam IS Earth embankment
THEN Dam type known
!
RULE for determining type of dam from user
IF   Type of dam IS Concrete or Roller compacted concrete
THEN Dam type known
!
RULE for determining type of dam from user
IF   Type of dam IS Rockfilled
THEN Dam type known
!
RULE 10
IF   Dam type known
AND  Cdam data
AND  DISPLAY Primary seepage instructions
AND  Primary seepage manifestation IS Boils
THEN Primary seepage manifestation known
AND  Seepage is related to boils
!
RULE 10
IF   Dam type known
AND  Cdam data
AND  NOT Primary seepage manifestation IS Boils
THEN Primary seepage manifestation known
AND  NOT Seepage is related to boils
!
RULE 11
IF   Dam type known
AND  Cdam data
AND   Primary seepage manifestation IS Evidence of damage to appurtenant
structures
THEN Primary seepage manifestation known
AND  Seepage is related to damaged structures
!
RULE 11
IF   Dam type known
AND  Cdam data
AND   NOT Primary seepage manifestation IS Evidence of damage to appurtenant
structures
THEN Primary seepage manifestation known
AND  NOT Seepage is related to damaged structures
!
RULE 12
IF   Dam type known
AND  Cdam data
AND   Primary seepage manifestation IS Changes in flow rates in toe drainage
```

```
system
THEN Primary seepage manifestation known
AND  Seepage is related to flow rate changes
!
RULE 12
IF   Dam type known
AND  Cdam data
AND  NOT Primary seepage manifestation IS Changes in flow rates in toe drainage
system
THEN Primary seepage manifestation known
AND  NOT Seepage is related to flow rate changes
!
RULE 14
IF   Dam type known
AND  Cdam data
AND  Primary seepage manifestation IS Abnormally high piezometric readings
THEN Primary seepage manifestation known
AND  Seepage is related to piezometric readings
!
RULE 14
IF   Dam type known
AND  Cdam data
AND  NOT Primary seepage manifestation IS Abnormally high piezometric readings
THEN Primary seepage manifestation known
AND  NOT Seepage is related to piezometric readings
!
RULE 15
IF   Dam type known
AND  Cdam data
AND  Primary seepage manifestation IS Holes or depressions
THEN Primary seepage manifestation known
AND  Seepage is related to holes
!
RULE 15
IF   Dam type known
AND  Cdam data
AND  NOT Primary seepage manifestation IS Holes or depressions
THEN Primary seepage manifestation known
AND  NOT Seepage is related to holes
!
RULE 16
IF   Dam type known
AND  Cdam data
AND  Primary seepage manifestation IS Signs of mass movement
THEN Primary seepage manifestation known
AND  Seepage is related to mass movement
!
RULE 16
IF   Dam type known
AND  Cdam data
AND  NOT Primary seepage manifestation IS Signs of mass movement
THEN Primary seepage manifestation known
```

```
AND  NOT Seepage is related to mass movement
!
RULE 17
IF   Dam type known
AND  Cdam data
AND  Primary seepage manifestation IS Turbid seepage or seepage carrying fines
THEN Primary seepage manifestation known
AND  Seepage is related to turbid seepage
!
RULE 17
IF   Dam type known
AND  Cdam data
AND  NOT Primary seepage manifestation IS Turbid seepage or seepage carrying
fines
THEN Primary seepage manifestation known
AND  NOT Seepage is related to turbid seepage
!
RULE 18
IF   Dam type known
AND  Cdam data
AND  Primary seepage manifestation IS Wet, soft, or quick spots or marshy areas
THEN Primary seepage manifestation known
AND  Seepage is related to wet spots
!
RULE 18
IF   Dam type known
AND  Cdam data
AND  NOT Primary seepage manifestation IS Wet, soft, or quick spots or marshy
areas
THEN Primary seepage manifestation known
AND  NOT Seepage is related to wet spots
!
RULE 30
IF   Primary seepage manifestation known
THEN Seek more information
AND  CHAIN DC.KNB
!
RULE to find information in database
IF   No previous seepage
AND  Dam located
AND  POSITION Alldams recordno IN alldams
AND  Name of dam := alldams.damname
AND  Dam ID := alldams.id
AND  State := alldams.state
AND  County := alldams.county
AND  Lake := alldams.lake
AND  River := alldams.river
AND  Hydraulic height := alldams.hydhgt
AND  Str height := alldams.strhgt
AND  Crest := alldams.crest
AND  Maximum capacity := alldams.maxcap
AND  Normal capacity := alldams.norcap
```

```
AND  Year completed := alldams.yearcmpl
AND  COE category := alldams.subcat
AND  Closest city := alldams.nearcity
AND  Distance := alldams.distance
AND  Population := alldams.population
AND  Number of locks := alldams.numlocks
AND  Seismic rating := alldams.seismic
AND  Spillway width := alldams.spillwid
AND  Spillway discharge := alldams.spilldis
AND  Volume of material := alldams.volmat
AND  Hazardcode := alldams.hazardcode
AND  Purpose := alldams.purpose
AND  Type := alldams.type
AND  Spillway type := alldams.spilltype
AND  Date of info2 := alldams.updtdate
AND  Hazard code defined
AND  Purpose defined
AND  Type defined
AND  Spillway type defined
AND  Year defined
THEN Dam information located
AND  Dam data checked
!
RULE to define hazardcodes
IF   Hazardcode = 1
THEN Hazard code defined
AND  Potential hazard := High
!
RULE to define hazardcodes
IF   Hazardcode = 2
THEN Hazard code defined
AND  Potential hazard := Significant
!
RULE to define hazardcodes
IF   Hazardcode = 3
THEN Hazard code defined
AND  Potential hazard := Low
!
RULE to define hazardcodes
IF   Hazardcode = ""
THEN Hazard code defined
AND  Potential hazard := Unknown
!
RULE to define year
IF   "19800000" < Date of info2
AND  Date of info2 < "19810000"
THEN Year defined
AND  FORGET Date of info2
AND  Date of info2 := 1980
!
RULE to define year
IF   "19810000" < Date of info2
```

```
AND  Date of info2 < "19820000"
THEN Year defined
AND  FORGET Date of info2
AND  Date of info2 := 1981
!
RULE to define year
IF   "19820000" < Date of info2
AND  Date of info2 < "19830000"
THEN Year defined
AND  FORGET Date of info2
AND  Date of info2 := 1982
!
RULE to define year
IF   "19830000" < Date of info2
AND  Date of info2 < "19840000"
THEN Year defined
AND  FORGET Date of info2
AND  Date of info2 := 1983
!
RULE to define year
IF   "19840000" < Date of info2
AND  Date of info2 < "19850000"
THEN Year defined
AND  FORGET Date of info2
AND  Date of info2 := 1984
!
RULE to define year
IF   "19850000" < Date of info2
AND  Date of info2 < "19860000"
THEN Year defined
AND  FORGET Date of info2
AND  Date of info2 := 1985
!
RULE to define year
IF   "19860000" < Date of info2
AND  Date of info2 < "19870000"
THEN Year defined
AND  FORGET Date of info2
AND  Date of info2 := 1986
!
RULE to define year
IF   "19870000" < Date of info2
AND  Date of info2 < "19880000"
THEN Year defined
AND  FORGET Date of info2
AND  Date of info2 := 1987
!
RULE to define year
IF   "19880000" < Date of info2
AND   Date of info2 < "19890000"
THEN Year defined
AND  FORGET Date of info2
```

```
AND  Date of info2 := 1988
!
RULE to define year
IF   "19890000" < Date of info2
AND  Date of info2 < "19900000"
THEN Year defined
AND  FORGET Date of info2
AND  Date of info2 := 1989
!
RULE to define spillway types
IF   Spillway type = U
THEN Spillway type defined
AND  Spillway is := Uncontrolled
!
RULE to define spillway types
IF   Spillway type = C
THEN Spillway type defined
AND  Spillway is := Controlled
!
RULE to define spillway types
IF   Spillway type = N
THEN Spillway type defined
AND  Spillway is := None
!
RULE to define spillway types
IF   Spillway type = ""
THEN Spillway type defined
AND  Spillway is := Unknown
!
RULE to define purpose
IF   Purpose = I
THEN Purpose defined
AND  Purpose is := Irrigation
!
RULE to define purpose
IF   Purpose = H
THEN Purpose defined
AND  Purpose is := Hydroelectric
!
RULE to define purpose
IF   Purpose = C
THEN Purpose defined
AND  Purpose is := Flood control
!
RULE to define purpose
IF   Purpose = N
THEN Purpose defined
AND  Purpose is := Navigation
!
RULE to define purpose
IF   Purpose = S
THEN Purpose defined
```

```
AND  Purpose is := Water supply
!
RULE to define purpose
IF   Purpose = R
THEN Purpose defined
AND  Purpose is := Recreation
!
RULE to define purpose
IF   Purpose = P
THEN Purpose defined
AND  Purpose is := Farm pond
!
RULE to define purpose
IF   Purpose = D
THEN Purpose defined
AND  Purpose is := Debris control
!
RULE to define purpose
IF   Purpose = O
THEN Purpose defined
AND  Purpose is := Other
!
RULE to define purpose
IF   Purpose = CC
THEN Purpose defined
AND  Purpose is := Flood control
!
RULE to define purpose
IF   Purpose = CD
THEN Purpose defined
AND  Purpose is := Flood and debris control
!
RULE to define purpose
IF   Purpose = CD
THEN Purpose defined
AND  Purpose is := Flood and debris control, recreation
!
RULE to define purpose
IF   Purpose = CH
OR   Purpose = HC
THEN Purpose defined
AND  Purpose is := Flood control, hydroelectric
!
RULE to define purpose
IF   Purpose = CHN
THEN Purpose defined
AND  Purpose is := Flood control, hydroelectric, navigation
!
RULE to define purpose
IF   Purpose = CHINR
THEN Purpose defined
AND  Purpose is := Flood control, hydroelectric, irrigation, navigation, other
```

```
!
RULE to define purpose
IF   Purpose = CHINRSO
OR   Purpose = HCIRNSO
OR   Purpose = CHISRNO
OR   Purpose = ISHCNRO
THEN Purpose defined
AND  Purpose is := Flood control, hydroelec, irrigation, navigation, water sup
!
RULE to define purpose
IF   Purpose = CHSR
OR   Purpose = CSRH
OR   Purpose = SCHR
THEN Purpose defined
AND  Purpose is := Flood control, hydroelectric, water supply, recreation
!
RULE to define purpose
IF   Purpose = CHRO
OR   Purpose = OHRC
THEN Purpose defined
AND  Purpose is := Flood control, hydroelectric, recreation, other
!
RULE to define purpose
IF   Purpose = CI
THEN Purpose defined
AND  Purpose is := Flood control, irrigation
!
RULE to define purpose
IF   Purpose = CDR
THEN Purpose defined
AND  Purpose is := Flood and debris control, recreation
!
RULE to define purpose
IF   Purpose = CIR
OR   Purpose = CRI
OR   Purpose = ICR
THEN Purpose defined
AND  Purpose is := Flood control, irrigation, recreation
!
RULE to define purpose
IF   Purpose = CIHR
OR   Purpose = CIRH
THEN Purpose defined
AND  Purpose is := Flood control, irrigation, hydroelectric, recreation
!
RULE to define purpose
IF   Purpose = CIRD
THEN Purpose defined
AND  Purpose is := Flood control, irrigation, recreation, debris control
!
RULE to define purpose
IF   Purpose = CIRO
```

```
THEN Purpose defined
AND  Purpose is := Flood control, irrigation, recreation, other
!
RULE to define purpose
IF   Purpose = CIS
THEN Purpose defined
AND  Purpose is := Flood control, irrigation, water supply
!
RULE to define purpose
IF   Purpose = CINRO
THEN Purpose defined
AND  Purpose is := Flood control, irrigation, navigation, recreation, other
!
RULE to define purpose
IF   Purpose = CINHRO
OR   Purpose = HCRINO
OR   Purpose = CHRINO
THEN Purpose defined
AND  Purpose is := Flood control, irrigation, navigation, hydroelec, recreation
!
RULE to define purpose
IF   Purpose = CISRO
THEN Purpose defined
AND  Purpose is := Flood control, irrigation, water supply, recreation, other
!
RULE to define purpose
IF   Purpose = CRIOS
THEN Purpose defined
AND  Purpose is := Flood control, irrigation, recreation, other, water supply
!
RULE to define purpose
IF   Purpose = CO
THEN Purpose defined
AND  Purpose is := Flood control, other
!
RULE to define purpose
IF   Purpose = CNRSO
THEN Purpose defined
AND  Purpose is := Flood control, navigation, recreation, water supply, other
!
RULE to define purpose
IF   Purpose = CR
OR   Purpose = RC
THEN Purpose defined
AND  Purpose is := Flood control, recreation
!
RULE to define purpose
IF   Purpose = CRH
OR   Purpose = HCR
OR   Purpose = CHR
OR   Purpose = HRC
THEN Purpose defined
```

```
AND  Purpose is := Flood control, recreation, hydroelectric
!
RULE to define purpose
IF   Purpose = CRN
OR   Purpose = CNR
OR   Purpose = NCR
THEN Purpose defined
AND  Purpose is := Flood control, recreation, navigation
!
RULE to define purpose
IF   Purpose = CRO
THEN Purpose defined
AND  Purpose is := Flood control, recreation, other
!
RULE to define purpose
IF   Purpose = CS
THEN Purpose defined
AND  Purpose is := Flood control, water supply
!
RULE to define purpose
IF   Purpose = CSN
THEN Purpose defined
AND  Purpose is := Flood control, water supply, navigation
!
RULE to define purpose
IF   Purpose = CSHN
THEN Purpose defined
AND  Purpose is := Flood control, water supply, hydroelectric, navigation
!
RULE to define purpose
IF   Purpose = CSHO
THEN Purpose defined
AND  Purpose is := Flood control, water supply, hydroelectric, other
!
RULE to define purpose
IF   Purpose = CSHNO
THEN Purpose defined
AND  Purpose is := Flood control, water supply, hydroelectric, navigation
!
RULE to define purpose
IF   Purpose = CSR
OR   Purpose = CRS
OR   Purpose = SRC
OR   Purpose = SCR
THEN Purpose defined
AND  Purpose is := Flood control, water supply, recreation
!
RULE to define purpose
IF   Purpose = CSO
OR   Purpose = COS
THEN Purpose defined
AND  Purpose is := Flood control, water supply, other
```

```
!
RULE to define purpose
IF   Purpose = CSRO
OR   Purpose = CRSO
THEN Purpose defined
AND  Purpose is := Flood control, water supply, recreation, other
!
RULE to define purpose
IF   Purpose = CSNR
OR   Purpose = CNRS
OR   Purpose = NCSR
THEN Purpose defined
AND  Purpose is := Flood control, water supply, recreation, navigation
!
RULE to define purpose
IF   Purpose = DR
THEN Purpose defined
AND  Purpose is := Debris control, recreation
!
RULE to define purpose
IF   Purpose = DHR
THEN Purpose defined
AND  Purpose is := Debris control, hydroelectric, recreation
!
RULE to define purpose
IF   Purpose = HCSRO
OR   Purpose = CRHSO
THEN Purpose defined
AND  Purpose is := Hydroelectric, flood control, water supply, recreation
!
RULE to define purpose
IF   Purpose = HCNR
OR   Purpose = HNCR
OR   Purpose = CHNR
OR   Purpose = NHRC
THEN Purpose defined
AND  Purpose is := Hydroelectric, flood control, navigation, recreation
!
RULE to define purpose
IF   Purpose = HO
THEN Purpose defined
AND  Purpose is := Hydroelectric, other
!
RULE to define purpose
IF   Purpose = HR
THEN Purpose defined
AND  Purpose is := Hydroelectric, recreation
!
RULE to define purpose
IF   Purpose = HNRI
THEN Purpose defined
AND  Purpose is := Hydroelectric, navigation, recreation, irrigation
```

```
!
RULE to define purpose
IF   Purpose = HOR
THEN Purpose defined
AND  Purpose is := Hydroelectric, other, recreation
!
RULE to define purpose
IF   Purpose = HNR
OR   Purpose = RHN
OR   Purpose = NHR
THEN Purpose defined
AND  Purpose is := Hydroelectric, navigation, recreation
!
RULE to define purpose
IF   Purpose = NC
THEN Purpose defined
AND  Purpose is := Navigation, flood control
!
RULE to define purpose
IF   Purpose = NH
OR   Purpose = HN
THEN Purpose defined
AND  Purpose is := Navigation, hydroelectric
!
RULE to define purpose
IF   Purpose = NRCSH
THEN Purpose defined
AND  Purpose is := Navigation, recreation, flood cont, water supply, hydroelec
!
RULE to define purpose
IF   Purpose = NCSH
THEN Purpose defined
AND  Purpose is := Navigation, flood control, water supply, hydroelectric
!
RULE to define purpose
IF   Purpose = NR
THEN Purpose defined
AND  Purpose is := Navigation, recreation
!
RULE to define purpose
IF   Purpose = NOR
THEN Purpose defined
AND  Purpose is := Navigation, other, recreation
!
RULE to define purpose
IF   Purpose = NRS
THEN Purpose defined
AND  Purpose is := Navigation, recreation, water supply
!
RULE to define purpose
IF   Purpose = NI
THEN Purpose defined
```

```
AND  Purpose is := Navigation, irrigation
!
RULE to define purpose
IF   Purpose = NOCRF
THEN Purpose defined
AND  Purpose is := Navigation, other, flood control, recreation
!
RULE to define purpose
IF   Purpose = RO
THEN Purpose defined
AND  Purpose is := Recreation, other
!
RULE to define purpose
IF   Purpose = SR
THEN Purpose defined
AND  Purpose is := Water supply, recreation
!
RULE to define purpose
IF   Purpose = SRO
OR   Purpose = OSR
THEN Purpose defined
AND  Purpose is := Water supply, recreation, other
!
RULE to define purpose
IF   Purpose = SIR
OR   Purpose = IRS
THEN Purpose defined
AND  Purpose is := Water supply, irrigation, recreation
!
RULE to define purpose
IF   Purpose = U
OR   Purpose = ""
THEN Purpose defined
AND  Purpose is := Unknown
!
RULE to define type
IF   Type = ""
THEN Type defined
AND  Type is := UNKNOWN
!
RULE to define type
IF   Type = RE
THEN Type defined
AND  Type is := EARTH
!
RULE to define type
IF   Type = REPG
OR   Type = PGRE
THEN Type defined
AND  Type is := EARTH, GRAVITY
!
RULE to define type
```

```
IF   Type = REOT
OR   Type = OTRE
THEN Type defined
AND  Type is := EARTH, OTHER
!
RULE to define type
IF   Type = ER
THEN Type defined
AND  Type is := ROCKFILL
!
RULE to define type
IF   Type = ERREPG
OR   Type = REERPG
OR   Type = PGERRE
OR   Type = PGREER
THEN Type defined
AND  Type is := ROCKFILLED, EARTH, GRAVITY
!
RULE to define type
IF   Type = ERRE
OR   Type = REER
THEN Type defined
AND  Type is := ROCKFILLED, EARTH
!
RULE to define type
IF   Type = PGER
THEN Type defined
AND  Type is := ROCKFILLED, GRAVITY
!
RULE to define type
IF   Type = PG
THEN Type defined
AND  Type is := GRAVITY
!
RULE to define type
IF   Type = CB
THEN Type defined
AND  Type is := BUTTRESS
!
RULE to define type
IF   Type = VA
THEN Type defined
AND  Type is := ARCH
!
RULE to define type
IF   Type = MV
THEN Type defined
AND  Type is := MULTIARCH
!
RULE to define type
IF   Type = OT
THEN Type defined
```

```
AND  Type is := OTHER
!
RULE to define type
IF   Type = PGOT
OR   Type = OTPG
THEN Type defined
AND  Type is := OTHER, GRAVITY
!
RULE for location of dam within Lower Mississippi Valley Division
IF   Division = 1
AND  LMV District IS St. Louis
AND  LMS Dam IS Carlyle Lake Dam
THEN Location of dam is known
AND  Division name := Lower Mississippi Valley
AND  Division abbreviation := LMV
AND  District abbreviation := LMS
AND  Recordno := 1
AND  Alldams recordno := 27
!
RULE for location of dam within Lower Mississippi Valley Division
IF   Division = 1
AND  LMV District IS St. Louis
AND  LMS Dam IS Lake Shelbyville Dam
THEN Location of dam is known
AND  Division name := Lower Mississippi Valley
AND  Division abbreviation := LMV
AND  District abbreviation := LMS
AND  Recordno := 2
AND  Alldams recordno := 29
!
RULE for location of dam within Lower Mississippi Valley Division
IF   Division = 1
AND  LMV District IS Vicksburg
AND  LMK Dam IS Not listed
THEN Location of dam is known
AND  Division name := Lower Mississippi Valley
AND  Division abbreviation := LMV
AND  District abbreviation := LMK
AND  No previous seepage
AND  CHAIN DU.KNB
!
RULE to locate dam within Lower Mississippi Valley Division
IF   Division abbreviation = LMV
AND  District abbreviation = LMM
AND  DISPLAY No dams LMM
AND  ASK Name of dam
THEN No dam information
AND  Type is := UNKNOWN
AND  Dam ID := ""
!
RULE to locate dam within Lower Mississippi Valley Division
IF   Division abbreviation = LMV
```

```
AND  District abbreviation = LMN
AND  counter < 3
AND  LMN dam number = 642
OR   LMN dam number = 650
THEN Dam located
AND  Alldams recordno := LMN dam number
!
RULE to cycle
IF   Division abbreviation = LMV
AND  District abbreviation = LMN
AND  Counter <= 1
THEN Dam located
AND  dam number := LMN dam number
AND  DISPLAY wrong number entered
AND  FORGET dam number
AND  FORGET LMN dam number
AND  FORGET Dam located
AND  counter := counter + 1
AND  CYCLE
!
RULE to cycle
IF   Division abbreviation = LMV
AND  District abbreviation = LMN
AND  Counter = 2
THEN Dam located
AND  dam number := LMN dam number
AND  FORGET dam number
AND  FORGET LMN dam number
AND  FORGET Dam located
AND  counter := counter + 1
AND  CYCLE
!
RULE to locate dam within Lower Mississippi Valley Division
IF   Division abbreviation = LMV
AND  District abbreviation = LMS
AND  counter < 3
AND  LMS dam number = 23
OR   LMS dam number = 28
OR   LMS dam number = 30
OR   LMS dam number = 31
OR   LMS dam number = 32
OR   LMS dam number = 33
OR   LMS dam number = 34
OR   LMS dam number = 35
OR   LMS dam number = 638
OR   LMS dam number = 639
OR   LMS dam number = 640
OR   LMS dam number = 645
OR   LMS dam number = 646
OR   LMS dam number = 651
OR   LMS dam number = 652
THEN Dam located
```

```
AND  Alldams recordno := LMS dam number
!
RULE to cycle
IF   Division abbreviation = LMV
AND  District abbreviation = LMS
AND  Counter = 1
THEN Dam located
AND  dam number := LMS dam number
AND  DISPLAY wrong number entered
AND  FORGET dam number
AND  FORGET LMS dam number
AND  FORGET Dam located
AND  counter := counter + 1
AND  CYCLE
!
RULE to cycle
IF   Division abbreviation = LMV
AND  District abbreviation = LMS
AND  Counter = 2
THEN Dam located
AND  dam number := LMS dam number
AND  FORGET dam number
AND  FORGET LMS dam number
AND  FORGET Dam located
AND  counter := counter + 1
AND  CYCLE
!
RULE to locate dam within Lower Mississippi Valley Division
IF   Division abbreviation = LMV
AND  District abbreviation = LMK
AND  counter < 3
AND  LMK dam number = 3
OR   LMK dam number = 4
OR   LMK dam number = 5
OR   LMK dam number = 6
OR   LMK dam number = 7
OR   LMK dam number = 9
OR   LMK dam number = 10
OR   LMK dam number = 13
OR   LMK dam number = 14
OR   LMK dam number = 15
OR   LMK dam number = 18
OR   LMK dam number = 19
OR   LMK dam number = 20
OR   LMK dam number = 24
OR   LMK dam number = 25
OR   LMK dam number = 26
OR   LMK dam number = 391
OR   LMK dam number = 603
OR   LMK dam number = 641
OR   LMK dam number = 643
OR   LMK dam number = 644
```

```
OR    LMK dam number = 648
OR    LMK dam number = 649
OR    LMK dam number = 653
THEN  Dam located
AND   Alldams recordno := LMK dam number
!
RULE  to cycle
IF    Division abbreviation = LMV
AND   District abbreviation = LMK
AND   Counter = 1
THEN  Dam located
AND   dam number := LMK dam number
AND   DISPLAY wrong number entered
AND   FORGET dam number
AND   FORGET LMK dam number
AND   FORGET Dam located
AND   counter := counter + 1
AND   CYCLE
!
RULE  to cycle
IF    Division abbreviation = LMV
AND   District abbreviation = LMK
AND   Counter = 2
THEN  Dam located
AND   dam number := LMK dam number
AND   FORGET dam number
AND   FORGET LMK dam number
AND   FORGET Dam located
AND   counter := counter + 1
AND   CYCLE
!
RULE  to locate dam within Missouri River Division
IF    Division abbreviation = MRD
AND   District abbreviation = MRK
AND   counter < 3
AND   MRK dam number = 36
OR    MRK dam number = 37
OR    MRK dam number = 38
OR    MRK dam number = 39
OR    MRK dam number = 40
OR    MRK dam number = 41
OR    MRK dam number = 42
OR    MRK dam number = 43
OR    MRK dam number = 44
OR    MRK dam number = 45
OR    MRK dam number = 46
OR    MRK dam number = 47
OR    MRK dam number = 48
OR    MRK dam number = 49
OR    MRK dam number = 50
OR    MRK dam number = 51
OR    MRK dam number = 534
```

```
OR    MRK dam number = 535
OR    MRK dam number = 554
OR    MRK dam number = 555
OR    MRK dam number = 556
THEN  Dam located
AND   Alldams recordno := MRK dam number
!
RULE  to cycle
IF    Division abbreviation = MRD
AND   District abbreviation = MRK
AND   Counter = 1
THEN  Dam located
AND   dam number := MRK dam number
AND   DISPLAY wrong number entered
AND   FORGET dam number
AND   FORGET MRK dam number
AND   FORGET Dam located
AND   counter := counter + 1
AND   CYCLE
!
RULE  to cycle
IF    Division abbreviation = MRD
AND   District abbreviation = MRK
AND   Counter = 2
THEN  Dam located
AND   dam number := MRK dam number
AND   FORGET dam number
AND   FORGET MRK dam number
AND   FORGET Dam located
AND   counter := counter + 1
AND   CYCLE
!
RULE  to locate dam within Missouri River Division
IF    Division abbreviation = MRD
AND   District abbreviation = MRO
AND   counter < 3
AND   MRO dam number = 52
OR    MRO dam number = 54
OR    MRO dam number = 57
OR    MRO dam number = 58
OR    MRO dam number = 59
OR    MRO dam number = 60
OR    MRO dam number = 62
OR    MRO dam number = 63
OR    MRO dam number = 67
OR    MRO dam number = 68
OR    MRO dam number = 69
OR    MRO dam number = 70
OR    MRO dam number = 71
OR    MRO dam number = 74
OR    MRO dam number = 75
OR    MRO dam number = 76
```

```
OR    MRO dam number = 77
OR    MRO dam number = 78
OR    MRO dam number = 79
OR    MRO dam number = 80
OR    MRO dam number = 81
OR    MRO dam number = 551
OR    MRO dam number = 553
THEN  Dam located
AND   Alldams recordno := MRO dam number
!
RULE  to cycle
IF    Division abbreviation = MRD
AND   District abbreviation = MRO
AND   Counter = 1
THEN  Dam located
AND   dam number := MRO dam number
AND   DISPLAY wrong number entered
AND   FORGET dam number
AND   FORGET MRO dam number
AND   FORGET Dam located
AND   counter := counter + 1
AND   CYCLE
!
RULE  to cycle
IF    Division abbreviation = MRD
AND   District abbreviation = MRO
AND   Counter = 2
THEN  Dam located
AND   dam number := MRO dam number
AND   FORGET dam number
AND   FORGET MRO dam number
AND   FORGET Dam located
AND   counter := counter + 1
AND   CYCLE
!
RULE  to locate dam within New England Division
IF    Division abbreviation = NED
AND   District abbreviation = NED
AND   counter < 3
AND   NED dam number = 164
OR    NED dam number = 165
OR    NED dam number = 166
OR    NED dam number = 167
OR    NED dam number = 168
OR    NED dam number = 169
OR    NED dam number = 170
OR    NED dam number = 171
OR    NED dam number = 173
OR    NED dam number = 174
OR    NED dam number = 175
OR    NED dam number = 176
OR    NED dam number = 177
```

```
OR   NED dam number = 178
OR   NED dam number = 181
OR   NED dam number = 182
OR   NED dam number = 183
OR   NED dam number = 184
OR   NED dam number = 186
OR   NED dam number = 188
OR   NED dam number = 189
OR   NED dam number = 190
OR   NED dam number = 191
OR   NED dam number = 194
OR   NED dam number = 195
OR   NED dam number = 197
OR   NED dam number = 198
OR   NED dam number = 543
OR   NED dam number = 544
OR   NED dam number = 545
OR   NED dam number = 546
OR   NED dam number = 547
THEN Dam located
AND  Alldams recordno := NED dam number
!
RULE to cycle
IF   Division abbreviation = NED
AND  District abbreviation = NED
AND  Counter = 1
THEN Dam located
AND  dam number := NED dam number
AND  DISPLAY wrong number entered
AND  FORGET dam number
AND  FORGET NED dam number
AND  FORGET Dam located
AND  counter := counter + 1
AND  CYCLE
!
RULE to cycle
IF   Division abbreviation = NED
AND  District abbreviation = NED
AND  Counter = 2
THEN Dam located
AND  dam number := NED dam number
AND  FORGET dam number
AND  FORGET NED dam number
AND  FORGET Dam located
AND  counter := counter + 1
AND  CYCLE
!
RULE to locate dam within North Atlantic Division
IF   Division abbreviation = NAD
AND  District abbreviation = NAB
AND  counter < 3
AND  NAB dam number = 1
```

```
 OR    NAB dam number = 2
 OR    NAB dam number = 84
 OR    NAB dam number = 85
 OR    NAB dam number = 86
 OR    NAB dam number = 87
 OR    NAB dam number = 89
 OR    NAB dam number = 91
 OR    NAB dam number = 92
 OR    NAB dam number = 93
 OR    NAB dam number = 94
 OR    NAB dam number = 95
 OR    NAB dam number = 96
 OR    NAB dam number = 536
 THEN Dam located
 AND  Alldams recordno := NAB dam number
 !
 RULE to cycle
 IF   Division abbreviation = NAD
 AND  District abbreviation = NAB
 AND  Counter = 1
 THEN Dam located
 AND  dam number := NAB dam number
 AND  DISPLAY wrong number entered
 AND  FORGET dam number
 AND  FORGET NAB dam number
 AND  FORGET Dam located
 AND  counter := counter + 1
 AND  CYCLE
 !
 RULE to cycle
 IF   Division abbreviation = NAD
 AND  District abbreviation = NAB
 AND  Counter = 2
 THEN Dam located
 AND  dam number := NAB dam number
 AND  FORGET dam number
 AND  FORGET NAB dam number
 AND  FORGET Dam located
 AND  counter := counter + 1
 AND  CYCLE
 !
 RULE to locate dam within North Atlantic Division
 IF   Division abbreviation = NAD
 AND  District abbreviation = NAN
 AND  counter < 3
 AND  NAN dam number = 97
 OR   NAN dam number = 172
 OR   NAN dam number = 540
 THEN Dam located
 AND  Alldams recordno := NAN dam number
 !
 RULE to cycle
```

```
IF   Division abbreviation = NAD
AND  District abbreviation = NAN
AND  Counter = 1
THEN Dam located
AND  dam number := NAN dam number
AND  DISPLAY wrong number entered
AND  FORGET dam number
AND  FORGET NAN dam number
AND  FORGET Dam located
AND  counter := counter + 1
AND  CYCLE
!
RULE to cycle
IF   Division abbreviation = NAD
AND  District abbreviation = NAN
AND  Counter = 2
THEN Dam located
AND  dam number := NAN dam number
AND  FORGET dam number
AND  FORGET NAN dam number
AND  FORGET Dam located
AND  counter := counter + 1
AND  CYCLE
!
RULE to locate dam within North Atlantic Division
IF   Division abbreviation = NAD
AND  District abbreviation = NAO
AND  counter < 3
AND  NAO dam number = 98
OR   NAO dam number = 637
THEN Dam located
AND  Alldams recordno := NAO dam number
!
RULE to cycle
IF   Division abbreviation = NAD
AND  District abbreviation = NAO
AND  Counter = 1
THEN Dam located
AND  dam number := NAO dam number
AND  DISPLAY wrong number entered
AND  FORGET dam number
AND  FORGET NAO dam number
AND  FORGET Dam located
AND  counter := counter + 1
AND  CYCLE
!
RULE to cycle
IF   Division abbreviation = NAD
AND  District abbreviation = NAO
AND  Counter = 2
THEN Dam located
AND  dam number := NAO dam number
```

```
AND   FORGET dam number
AND   FORGET NAO dam number
AND   FORGET Dam located
AND   counter := counter + 1
AND   CYCLE
!
RULE to locate dam within North Atlantic Division
IF    Division abbreviation = NAD
AND   District abbreviation = NAP
AND   counter < 3
AND   NAP dam number = 100
OR    NAP dam number = 101
OR    NAP dam number = 102
OR    NAP dam number = 103
THEN  Dam located
AND   Alldams recordno := NAP dam number
!
RULE to cycle
IF    Division abbreviation = NAD
AND   District abbreviation = NAP
AND   Counter = 1
THEN  Dam located
AND   dam number := NAP dam number
AND   DISPLAY wrong number entered
AND   FORGET dam number
AND   FORGET NAP dam number
AND   FORGET Dam located
AND   counter := counter + 1
AND   CYCLE
!
RULE to cycle
IF    Division abbreviation = NAD
AND   District abbreviation = NAP
AND   Counter = 2
THEN  Dam located
AND   dam number := NAP dam number
AND   FORGET dam number
AND   FORGET NAP dam number
AND   FORGET Dam located
AND   counter := counter + 1
AND   CYCLE
!
RULE to locate dam within North Central Division
IF    Division abbreviation = NCD
AND   District abbreviation = NCB
AND   counter < 3
AND   NCB dam number = 655
OR    NCB dam number = 661
THEN  Dam located
AND   Alldams recordno := NCB dam number
!
RULE to cycle
```

```
IF   Division abbreviation = NCD
AND  District abbreviation = NCB
AND  Counter = 1
THEN Dam located
AND  dam number := NCB dam number
AND  DISPLAY wrong number entered
AND  FORGET dam number
AND  FORGET NCB dam number
AND  FORGET Dam located
AND  counter := counter + 1
AND  CYCLE
!
RULE to cycle
IF   Division abbreviation = NCD
AND  District abbreviation = NCB
AND  Counter = 2
THEN Dam located
AND  dam number := NCB dam number
AND  FORGET dam number
AND  FORGET NCB dam number
AND  FORGET Dam located
AND  counter := counter + 1
AND  CYCLE
!
RULE to locate dam within North Central Division
IF   Division abbreviation = NCD
AND  District abbreviation = NCC
AND  DISPLAY No dams NCC
AND  ASK Name of dam
THEN No dam information
AND  Type is := UNKNOWN
AND  Dam ID := ""
!
RULE to locate dam within North Central Division
IF   Division abbreviation = NCD
AND  District abbreviation = NCE
AND  counter < 3
AND  NCE dam number = 106
OR   NCE dam number = 110
OR   NCE dam number = 112
OR   NCE dam number = 113
OR   NCE dam number = 114
OR   NCE dam number = 116
OR   NCE dam number = 118
OR   NCE dam number = 121
OR   NCE dam number = 666
THEN Dam located
AND  Alldams recordno := NCE dam number
!
RULE to cycle
IF   Division abbreviation = NCD
AND  District abbreviation = NCE
```

```
AND  Counter = 1
THEN Dam located
AND  dam number := NCE dam number
AND  DISPLAY wrong number entered
AND  FORGET dam number
AND  FORGET NCE dam number
AND  FORGET Dam located
AND  counter := counter + 1
AND  CYCLE
!
RULE to cycle
IF   Division abbreviation = NCD
AND  District abbreviation = NCE
AND  Counter = 2
THEN Dam located
AND  dam number := NCE dam number
AND  FORGET dam number
AND  FORGET NCE dam number
AND  FORGET Dam located
AND  counter := counter + 1
AND  CYCLE
!
RULE to locate dam within North Central Division
IF   Division abbreviation = NCD
AND  District abbreviation = NCR
AND  counter < 3
AND  NCR dam number = 105
OR   NCR dam number = 107
OR   NCR dam number = 108
OR   NCR dam number = 109
OR   NCR dam number = 111
OR   NCR dam number = 115
OR   NCR dam number = 117
OR   NCR dam number = 119
OR   NCR dam number = 120
OR   NCR dam number = 122
OR   NCR dam number = 123
OR   NCR dam number = 124
OR   NCR dam number = 125
OR   NCR dam number = 126
OR   NCR dam number = 127
OR   NCR dam number = 128
OR   NCR dam number = 129
OR   NCR dam number = 130
OR   NCR dam number = 131
OR   NCR dam number = 132
OR   NCR dam number = 133
OR   NCR dam number = 135
OR   NCR dam number = 136
OR   NCR dam number = 537
OR   NCR dam number = 541
OR   NCR dam number = 542
```

```
OR    NCR dam number = 654
OR    NCR dam number = 656
OR    NCR dam number = 657
THEN  Dam located
AND   Alldams recordno := NCR dam number
!
RULE  to cycle
IF    Division abbreviation = NCD
AND   District abbreviation = NCR
AND   Counter = 1
THEN  Dam located
AND   dam number := NCR dam number
AND   DISPLAY wrong number entered
AND   FORGET dam number
AND   FORGET NCR dam number
AND   FORGET Dam located
AND   counter := counter + 1
AND   CYCLE
!
RULE  to cycle
IF    Division abbreviation = NCD
AND   District abbreviation = NCR
AND   Counter = 2
THEN  Dam located
AND   dam number := NCR dam number
AND   FORGET dam number
AND   FORGET NCR dam number
AND   FORGET Dam located
AND   counter := counter + 1
AND   CYCLE
!
RULE  to locate dam within North Central Division
IF    Division abbreviation = NCD
AND   District abbreviation = NCS
AND   counter < 3
AND   NCS dam number = 139
OR    NCS dam number = 140
OR    NCS dam number = 141
OR    NCS dam number = 142
OR    NCS dam number = 145
OR    NCS dam number = 146
OR    NCS dam number = 147
OR    NCS dam number = 148
OR    NCS dam number = 149
OR    NCS dam number = 150
OR    NCS dam number = 151
OR    NCS dam number = 152
OR    NCS dam number = 153
OR    NCS dam number = 154
OR    NCS dam number = 155
OR    NCS dam number = 156
OR    NCS dam number = 157
```

```
OR   NCS dam number = 161
OR   NCS dam number = 162
OR   NCS dam number = 163
OR   NCS dam number = 659
OR   NCS dam number = 662
OR   NCS dam number = 663
OR   NCS dam number = 664
OR   NCS dam number = 665
THEN Dam located
AND  Alldams recordno := NCS dam number
!
RULE to cycle
IF   Division abbreviation = NCD
AND  District abbreviation = NCS
AND  Counter = 1
THEN Dam located
AND  dam number := NCS dam number
AND  DISPLAY wrong number entered
AND  FORGET dam number
AND  FORGET NCS dam number
AND  FORGET Dam located
AND  counter := counter + 1
AND  CYCLE
!
RULE to cycle
IF   Division abbreviation = NCD
AND  District abbreviation = NCS
AND  Counter = 2
THEN Dam located
AND  dam number := NCS dam number
AND  FORGET dam number
AND  FORGET NCS dam number
AND  FORGET Dam located
AND  counter := counter + 1
AND  CYCLE
!
RULE to locate dam within North Pacific Division
IF   Division abbreviation = NPD
AND  District abbreviation = NPA
AND  counter < 3
AND  NPA dam number = 199
OR   NPA dam number = 667
THEN Dam located
AND  Alldams recordno := NPA dam number
!
RULE to cycle
IF   Division abbreviation = NPD
AND  District abbreviation = NPA
AND  Counter = 1
THEN Dam located
AND  dam number := NPA dam number
AND  DISPLAY wrong number entered
```

```
AND  FORGET dam number
AND  FORGET NPA dam number
AND  FORGET Dam located
AND  counter := counter + 1
AND  CYCLE
!
RULE to cycle
IF   Division abbreviation = NPD
AND  District abbreviation = NPA
AND  Counter = 2
THEN Dam located
AND  dam number := NPA dam number
AND  FORGET dam number
AND  FORGET NPA dam number
AND  FORGET Dam located
AND  counter := counter + 1
AND  CYCLE
!
RULE to locate dam within North Pacific Division
IF   Division abbreviation = NPD
AND  District abbreviation = NPP
AND  counter < 3
AND  NPP dam number = 200
OR   NPP dam number = 201
OR   NPP dam number = 202
OR   NPP dam number = 203
OR   NPP dam number = 204
OR   NPP dam number = 205
OR   NPP dam number = 206
OR   NPP dam number = 207
OR   NPP dam number = 208
OR   NPP dam number = 210
OR   NPP dam number = 212
OR   NPP dam number = 215
OR   NPP dam number = 217
THEN Dam located
AND  Alldams recordno := NPP dam number
!
RULE to cycle
IF   Division abbreviation = NPD
AND  District abbreviation = NPP
AND  Counter = 1
THEN Dam located
AND  dam number := NPP dam number
AND  DISPLAY wrong number entered
AND  FORGET dam number
AND  FORGET NPP dam number
AND  FORGET Dam located
AND  counter := counter + 1
AND  CYCLE
!
RULE to cycle
```

```
IF   Division abbreviation = NPD
AND  District abbreviation = NPP
AND  Counter = 2
THEN Dam located
AND  dam number := NPP dam number
AND  FORGET dam number
AND  FORGET NPP dam number
AND  FORGET Dam located
AND  counter := counter + 1
AND  CYCLE
!
RULE to locate dam within North Pacific Division
IF   Division abbreviation = NPD
AND  District abbreviation = NPS
AND  counter < 3
AND  NPS dam number = 218
OR   NPS dam number = 220
OR   NPS dam number = 680
OR   NPS dam number = 684
THEN Dam located
AND  Alldams recordno := NPS dam number
!
RULE to cycle
IF   Division abbreviation = NPD
AND  District abbreviation = NPS
AND  Counter = 1
THEN Dam located
AND  dam number := NPS dam number
AND  DISPLAY wrong number entered
AND  FORGET dam number
AND  FORGET NPS dam number
AND  FORGET Dam located
AND  counter := counter + 1
AND  CYCLE
!
RULE to cycle
IF   Division abbreviation = NPD
AND  District abbreviation = NPS
AND  Counter = 2
THEN Dam located
AND  dam number := NPS dam number
AND  FORGET dam number
AND  FORGET NPS dam number
AND  FORGET Dam located
AND  counter := counter + 1
AND  CYCLE
!
RULE to locate dam within North Pacific Division
IF   Division abbreviation = NPD
AND  District abbreviation = NPW
AND  counter < 3
AND  NPW dam number = 226
```

```
OR    NPW dam number = 228
OR    NPW dam number = 229
OR    NPW dam number = 230
OR    NPW dam number = 231
OR    NPW dam number = 233
OR    NPW dam number = 674
OR    NPW dam number = 675
OR    NPW dam number = 676
OR    NPW dam number = 677
OR    NPW dam number = 678
OR    NPW dam number = 679
THEN  Dam located
AND   Alldams recordno := NPW dam number
!
RULE  to cycle
IF    Division abbreviation = NPD
AND   District abbreviation = NPW
AND   Counter = 1
THEN  Dam located
AND   dam number := NPW dam number
AND   DISPLAY wrong number entered
AND   FORGET dam number
AND   FORGET NPW dam number
AND   FORGET Dam located
AND   counter := counter + 1
AND   CYCLE
!
RULE  to cycle
IF    Division abbreviation = NPD
AND   District abbreviation = NPW
AND   Counter = 2
THEN  Dam located
AND   dam number := NPW dam number
AND   FORGET dam number
AND   FORGET NPW dam number
AND   FORGET Dam located
AND   counter := counter + 1
AND   CYCLE
!
RULE  to locate dam within Ohio River Division
IF    Division abbreviation = ORD
AND   District abbreviation = ORH
AND   counter < 3
AND   ORH dam number = 237
OR    ORH dam number = 238
OR    ORH dam number = 239
OR    ORH dam number = 244
OR    ORH dam number = 245
OR    ORH dam number = 247
OR    ORH dam number = 248
OR    ORH dam number = 249
OR    ORH dam number = 250
```

```
OR   ORH dam number = 251
OR   ORH dam number = 252
OR   ORH dam number = 253
OR   ORH dam number = 255
OR   ORH dam number = 257
OR   ORH dam number = 258
OR   ORH dam number = 259
OR   ORH dam number = 262
OR   ORH dam number = 263
OR   ORH dam number = 266
OR   ORH dam number = 267
OR   ORH dam number = 269
OR   ORH dam number = 270
OR   ORH dam number = 272
OR   ORH dam number = 273
OR   ORH dam number = 275
OR   ORH dam number = 329
OR   ORH dam number = 560
OR   ORH dam number = 566
OR   ORH dam number = 567
THEN Dam located
AND  Alldams recordno := ORH dam number
!
RULE to cycle
IF   Division abbreviation = ORD
AND  District abbreviation = ORH
AND  Counter = 1
THEN Dam located
AND  dam number := ORH dam number
AND  DISPLAY wrong number entered
AND  FORGET dam number
AND  FORGET ORH dam number
AND  FORGET Dam located
AND  counter := counter + 1
AND  CYCLE
!
RULE to cycle
IF   Division abbreviation = ORD
AND  District abbreviation = ORH
AND  Counter = 2
THEN Dam located
AND  dam number := ORH dam number
AND  FORGET dam number
AND  FORGET ORH dam number
AND  FORGET Dam located
AND  counter := counter + 1
AND  CYCLE
!
RULE to locate dam within Ohio River Division
IF   Division abbreviation = ORD
AND  District abbreviation = ORL
AND  counter < 3
```

```
AND  ORL dam number = 276
OR   ORL dam number = 277
OR   ORL dam number = 278
OR   ORL dam number = 280
OR   ORL dam number = 281
OR   ORL dam number = 282
OR   ORL dam number = 283
OR   ORL dam number = 285
OR   ORL dam number = 287
OR   ORL dam number = 288
OR   ORL dam number = 289
OR   ORL dam number = 290
OR   ORL dam number = 291
OR   ORL dam number = 292
OR   ORL dam number = 293
OR   ORL dam number = 294
OR   ORL dam number = 295
OR   ORL dam number = 296
OR   ORL dam number = 297
OR   ORL dam number = 298
OR   ORL dam number = 299
OR   ORL dam number = 300
OR   ORL dam number = 301
OR   ORL dam number = 302
OR   ORL dam number = 303
OR   ORL dam number = 304
OR   ORL dam number = 305
OR   ORL dam number = 306
OR   ORL dam number = 307
OR   ORL dam number = 308
OR   ORL dam number = 309
OR   ORL dam number = 311
OR   ORL dam number = 312
OR   ORL dam number = 313
OR   ORL dam number = 314
OR   ORL dam number = 315
OR   ORL dam number = 316
OR   ORL dam number = 317
OR   ORL dam number = 318
OR   ORL dam number = 319
OR   ORL dam number = 320
OR   ORL dam number = 559
OR   ORL dam number = 562
OR   ORL dam number = 563
THEN Dam located
AND  Alldams recordno := ORL dam number
!
RULE to cycle
IF   Division abbreviation = ORD
AND  District abbreviation = ORL
AND  Counter = 1
THEN Dam located
```

```
AND  dam number := ORL dam number
AND  DISPLAY wrong number entered
AND  FORGET dam number
AND  FORGET ORL dam number
AND  FORGET Dam located
AND  counter := counter + 1
AND  CYCLE
!
RULE to cycle
IF   Division abbreviation = ORD
AND  District abbreviation = ORL
AND  Counter = 2
THEN Dam located
AND  dam number := ORL dam number
AND  FORGET dam number
AND  FORGET ORL dam number
AND  FORGET Dam located
AND  counter := counter + 1
AND  CYCLE
!
RULE to locate dam within Ohio River Division
IF   Division abbreviation = ORD
AND  District abbreviation = ORN
AND  counter < 3
AND  ORN dam number = 321
OR   ORN dam number = 323
OR   ORN dam number = 324
OR   ORN dam number = 325
OR   ORN dam number = 326
OR   ORN dam number = 327
OR   ORN dam number = 328
OR   ORN dam number = 330
THEN Dam located
AND  Alldams recordno := ORN dam number
!
RULE to cycle
IF   Division abbreviation = ORD
AND  District abbreviation = ORN
AND  Counter = 1
THEN Dam located
AND  dam number := ORN dam number
AND  DISPLAY wrong number entered
AND  FORGET dam number
AND  FORGET ORN dam number
AND  FORGET Dam located
AND  counter := counter + 1
AND  CYCLE
!
RULE to cycle
IF   Division abbreviation = ORD
AND  District abbreviation = ORN
AND  Counter = 2
```

```
THEN Dam located
AND  dam number := ORN dam number
AND  FORGET dam number
AND  FORGET ORN dam number
AND  FORGET Dam located
AND  counter := counter + 1
AND  CYCLE
!
RULE to locate dam within Ohio River Division
IF   Division abbreviation = ORD
AND  District abbreviation = ORP
AND  counter < 3
AND  ORP dam number = 254
OR   ORP dam number = 332
OR   ORP dam number = 333
OR   ORP dam number = 334
OR   ORP dam number = 335
OR   ORP dam number = 336
OR   ORP dam number = 337
OR   ORP dam number = 338
OR   ORP dam number = 339
OR   ORP dam number = 340
OR   ORP dam number = 341
OR   ORP dam number = 342
OR   ORP dam number = 344
OR   ORP dam number = 345
OR   ORP dam number = 346
OR   ORP dam number = 347
OR   ORP dam number = 348
OR   ORP dam number = 349
OR   ORP dam number = 350
OR   ORP dam number = 351
OR   ORP dam number = 352
OR   ORP dam number = 353
OR   ORP dam number = 354
OR   ORP dam number = 355
OR   ORP dam number = 356
OR   ORP dam number = 357
OR   ORP dam number = 358
OR   ORP dam number = 359
OR   ORP dam number = 360
OR   ORP dam number = 361
OR   ORP dam number = 362
OR   ORP dam number = 363
OR   ORP dam number = 364
OR   ORP dam number = 365
OR   ORP dam number = 366
OR   ORP dam number = 367
OR   ORP dam number = 368
OR   ORP dam number = 561
THEN Dam located
AND  Alldams recordno := ORP dam number
```

```
!
RULE to cycle
IF   Division abbreviation = ORD
AND  District abbreviation = ORP
AND  Counter = 1
THEN Dam located
AND  dam number := ORP dam number
AND  DISPLAY wrong number entered
AND  FORGET dam number
AND  FORGET ORP dam number
AND  FORGET Dam located
AND  counter := counter + 1
AND  CYCLE
!
RULE to cycle
IF   Division abbreviation = ORD
AND  District abbreviation = ORP
AND  Counter = 2
THEN Dam located
AND  dam number := ORP dam number
AND  FORGET dam number
AND  FORGET ORP dam number
AND  FORGET Dam located
AND  counter := counter + 1
AND  CYCLE
!
RULE to locate dam within Pacific Ocean Division
IF   Division abbreviation = POD
AND  District abbreviation = POF
AND  DISPLAY No dams POF
AND  ASK Name of dam
THEN No dam information
AND  Type is := UNKNOWN
AND  Dam ID := ""
!
RULE to locate dam within Pacific Ocean Division
IF   Division abbreviation = POD
AND  District abbreviation = POH
AND  DISPLAY No dams POH
AND  ASK Name of dam
THEN No dam information
AND  Type is := UNKNOWN
AND  Dam ID := ""
!
RULE to locate dam within Pacific Ocean Division
IF   Division abbreviation = POD
AND  District abbreviation = POJ
AND  DISPLAY No dams POJ
AND  ASK Name of dam
THEN No dam information
AND  Type is := UNKNOWN
AND  Dam ID := ""
```

```
!
RULE to locate dam within South Atlantic Division
IF   Division abbreviation = SAD
AND  District abbreviation = SAC
AND  DISPLAY No dams SAC
AND  ASK Name of dam
THEN No dam information
AND  Type is := UNKNOWN
AND  Dam ID := ""
!
RULE to locate dam within South Atlantic Division
IF   Division abbreviation = SAD
AND  District abbreviation = SAJ
AND  counter < 3
AND  SAJ dam number = 371
OR   SAJ dam number = 373
OR   SAJ dam number = 374
OR   SAJ dam number = 375
OR   SAJ dam number = 376
OR   SAJ dam number = 605
OR   SAJ dam number = 606
THEN Dam located
AND  Alldams recordno := SAJ dam number
!
RULE to cycle
IF   Division abbreviation = SAD
AND  District abbreviation = SAJ
AND  Counter = 1
THEN Dam located
AND  dam number := SAJ dam number
AND  DISPLAY wrong number entered
AND  FORGET dam number
AND  FORGET SAJ dam number
AND  FORGET Dam located
AND  counter := counter + 1
AND  CYCLE
!
RULE to cycle
IF   Division abbreviation = SAD
AND  District abbreviation = SAJ
AND  Counter = 2
THEN Dam located
AND  dam number := SAJ dam number
AND  FORGET dam number
AND  FORGET SAJ dam number
AND  FORGET Dam located
AND  counter := counter + 1
AND  CYCLE
!
RULE to locate dam within South Atlantic Division
IF   Division abbreviation = SAD
AND  District abbreviation = SAM
```

```
 AND  counter < 3
 AND  SAM dam number = 377
 OR   SAM dam number = 378
 OR   SAM dam number = 379
 OR   SAM dam number = 380
 OR   SAM dam number = 381
 OR   SAM dam number = 382
 OR   SAM dam number = 383
 OR   SAM dam number = 384
 OR   SAM dam number = 385
 OR   SAM dam number = 386
 OR   SAM dam number = 387
 OR   SAM dam number = 388
 OR   SAM dam number = 389
 OR   SAM dam number = 390
 OR   SAM dam number = 393
 OR   SAM dam number = 394
 OR   SAM dam number = 395
 OR   SAM dam number = 564
 OR   SAM dam number = 595
 OR   SAM dam number = 596
 OR   SAM dam number = 597
 OR   SAM dam number = 598
 OR   SAM dam number = 599
 OR   SAM dam number = 600
 OR   SAM dam number = 601
 OR   SAM dam number = 607
 OR   SAM dam number = 608
 OR   SAM dam number = 685
 OR   SAM dam number = 686
THEN Dam located
AND  Alldams recordno := SAM dam number
!
RULE to cycle
IF   Division abbreviation = SAD
AND  District abbreviation = SAM
AND  Counter = 1
THEN Dam located
AND  dam number := SAM dam number
AND  DISPLAY wrong number entered
AND  FORGET dam number
AND  FORGET SAM dam number
AND  FORGET Dam located
AND  counter := counter + 1
AND  CYCLE
!
RULE to cycle
IF   Division abbreviation = SAD
AND  District abbreviation = SAM
AND  Counter = 2
THEN Dam located
AND  dam number := SAM dam number
```

```
AND  FORGET dam number
AND  FORGET SAM dam number
AND  FORGET Dam located
AND  counter := counter + 1
AND  CYCLE
!
RULE to locate dam within South Atlantic Division
IF   Division abbreviation = SAD
AND  District abbreviation = SAS
AND  counter < 3
AND  SAS dam number = 396
OR   SAS dam number = 604
OR   SAS dam number = 610
OR   SAS dam number = 723
THEN Dam located
AND  Alldams recordno := SAS dam number
!
RULE to cycle
IF   Division abbreviation = SAD
AND  District abbreviation = SAS
AND  Counter = 1
THEN Dam located
AND  dam number := SAS dam number
AND  DISPLAY wrong number entered
AND  FORGET dam number
AND  FORGET SAS dam number
AND  FORGET Dam located
AND  counter := counter + 1
AND  CYCLE
!
RULE to cycle
IF   Division abbreviation = SAD
AND  District abbreviation = SAS
AND  Counter = 2
THEN Dam located
AND  dam number := SAS dam number
AND  FORGET dam number
AND  FORGET SAS dam number
AND  FORGET Dam located
AND  counter := counter + 1
AND  CYCLE
!
RULE to locate dam within South Atlantic Division
IF   Division abbreviation = SAD
AND  District abbreviation = SAW
AND  counter < 3
AND  SAW dam number = 370
OR   SAW dam number = 399
OR   SAW dam number = 400
OR   SAW dam number = 401
OR   SAW dam number = 402
OR   SAW dam number = 403
```

```
OR    SAW dam number = 602
OR    SAW dam number = 609
THEN  Dam located
AND   Alldams recordno := SAW dam number
!
RULE  to cycle
IF    Division abbreviation = SAD
AND   District abbreviation = SAW
AND   Counter = 1
THEN  Dam located
AND   dam number := SAW dam number
AND   DISPLAY wrong number entered
AND   FORGET dam number
AND   FORGET SAW dam number
AND   FORGET Dam located
AND   counter := counter + 1
AND   CYCLE
!
RULE  to cycle
IF    Division abbreviation = SAD
AND   District abbreviation = SAW
AND   Counter = 2
THEN  Dam located
AND   dam number := SAW dam number
AND   FORGET dam number
AND   FORGET SAW dam number
AND   FORGET Dam located
AND   counter := counter + 1
AND   CYCLE
!
RULE  to locate dam within South Pacific Division
IF    Division abbreviation = SPD
AND   District abbreviation = SPL
AND   counter < 3
AND   SPL dam number = 421
OR    SPL dam number = 422
OR    SPL dam number = 423
OR    SPL dam number = 424
OR    SPL dam number = 425
OR    SPL dam number = 426
OR    SPL dam number = 427
OR    SPL dam number = 428
OR    SPL dam number = 429
OR    SPL dam number = 431
OR    SPL dam number = 432
OR    SPL dam number = 433
OR    SPL dam number = 436
OR    SPL dam number = 437
OR    SPL dam number = 438
OR    SPL dam number = 439
OR    SPL dam number = 440
OR    SPL dam number = 613
```

```
OR   SPL dam number = 627
OR   SPL dam number = 628
OR   SPL dam number = 682
THEN Dam located
AND  Alldams recordno := SPL dam number
!
RULE to cycle
IF   Division abbreviation = SPD
AND  District abbreviation = SPL
AND  Counter = 1
THEN Dam located
AND  dam number := SPL dam number
AND  DISPLAY wrong number entered
AND  FORGET dam number
AND  FORGET SPL dam number
AND  FORGET Dam located
AND  counter := counter + 1
AND  CYCLE
!
RULE to cycle
IF   Division abbreviation = SPD
AND  District abbreviation = SPL
AND  Counter = 2
THEN Dam located
AND  dam number := SPL dam number
AND  FORGET dam number
AND  FORGET SPL dam number
AND  FORGET Dam located
AND  counter := counter + 1
AND  CYCLE
!
RULE to locate dam within South Pacific Division
IF   Division abbreviation = SPD
AND  District abbreviation = SPK
AND  counter < 3
AND  SPK dam number = 404
OR   SPK dam number = 405
OR   SPK dam number = 406
OR   SPK dam number = 407
OR   SPK dam number = 408
OR   SPK dam number = 409
OR   SPK dam number = 411
OR   SPK dam number = 412
OR   SPK dam number = 414
OR   SPK dam number = 415
OR   SPK dam number = 416
OR   SPK dam number = 417
OR   SPK dam number = 418
OR   SPK dam number = 419
OR   SPK dam number = 420
OR   SPK dam number = 548
OR   SPK dam number = 549
```

```
OR    SPK dam number = 550
OR    SPK dam number = 611
OR    SPK dam number = 612
OR    SPK dam number = 621
OR    SPK dam number = 622
OR    SPK dam number = 623
OR    SPK dam number = 624
OR    SPK dam number = 626
OR    SPK dam number = 630
OR    SPK dam number = 631
OR    SPK dam number = 633
OR    SPK dam number = 634
OR    SPK dam number = 635
OR    SPK dam number = 636
OR    SPK dam number = 681
THEN  Dam located
AND   Alldams recordno := SPK dam number
!
RULE  to cycle
IF    Division abbreviation = SPD
AND   District abbreviation = SPK
AND   Counter = 1
THEN  Dam located
AND   dam number := SPK dam number
AND   DISPLAY wrong number entered
AND   FORGET dam number
AND   FORGET SPK dam number
AND   FORGET Dam located
AND   counter := counter + 1
AND   CYCLE
!
RULE  to cycle
IF    Division abbreviation = SPD
AND   District abbreviation = SPK
AND   Counter = 2
THEN  Dam located
AND   dam number := SPK dam number
AND   FORGET dam number
AND   FORGET SPK dam number
AND   FORGET Dam located
AND   counter := counter + 1
AND   CYCLE
!
RULE  to locate dam within South Pacific Division
IF    Division abbreviation = SPD
AND   District abbreviation = SPN
AND   counter < 3
AND   SPN dam number = 441
OR    SPN dam number = 442
OR    SPN dam number = 629
OR    SPN dam number = 632
THEN  Dam located
```

```
AND  Alldams recordno := SPN dam number
!
RULE to cycle
IF   Division abbreviation = SPD
AND  District abbreviation = SPN
AND  Counter = 1
THEN Dam located
AND  dam number := SPN dam number
AND  DISPLAY wrong number entered
AND  FORGET dam number
AND  FORGET SPN dam number
AND  FORGET Dam located
AND  counter := counter + 1
AND  CYCLE
!
RULE to cycle
IF   Division abbreviation = SPD
AND  District abbreviation = SPN
AND  Counter = 2
THEN Dam located
AND  dam number := SPN dam number
AND  FORGET dam number
AND  FORGET SPN dam number
AND  FORGET Dam located
AND  counter := counter + 1
AND  CYCLE
!
RULE to locate dam within South Western Division
IF   Division abbreviation = SWD
AND  District abbreviation = SWA
AND  counter < 3
AND  SWA dam number = 445
OR   SWA dam number = 446
OR   SWA dam number = 447
OR   SWA dam number = 448
OR   SWA dam number = 450
OR   SWA dam number = 451
OR   SWA dam number = 452
OR   SWA dam number = 453
OR   SWA dam number = 454
OR   SWA dam number = 455
OR   SWA dam number = 456
OR   SWA dam number = 457
OR   SWA dam number = 458
OR   SWA dam number = 572
OR   SWA dam number = 574
OR   SWA dam number = 575
OR   SWA dam number = 579
OR   SWA dam number = 590
OR   SWA dam number = 591
THEN Dam located
AND  Alldams recordno := SWA dam number
```

```
!
RULE to cycle
IF   Division abbreviation = SWD
AND  District abbreviation = SWA
AND  Counter = 1
THEN Dam located
AND  dam number := SWA dam number
AND  DISPLAY wrong number entered
AND  FORGET dam number
AND  FORGET SWA dam number
AND  FORGET Dam located
AND  counter := counter + 1
AND  CYCLE
!
RULE to cycle
IF   Division abbreviation = SWD
AND  District abbreviation = SWA
AND  Counter = 2
THEN Dam located
AND  dam number := SWA dam number
AND  FORGET dam number
AND  FORGET SWA dam number
AND  FORGET Dam located
AND  counter := counter + 1
AND  CYCLE
!
RULE to locate dam within South Western Division
IF   Division abbreviation = SWD
AND  District abbreviation = SWF
AND  counter < 3
AND  SWF dam number = 460
OR   SWF dam number = 461
OR   SWF dam number = 462
OR   SWF dam number = 465
OR   SWF dam number = 467
OR   SWF dam number = 469
OR   SWF dam number = 470
OR   SWF dam number = 473
OR   SWF dam number = 475
OR   SWF dam number = 477
OR   SWF dam number = 478
OR   SWF dam number = 479
OR   SWF dam number = 480
OR   SWF dam number = 578
OR   SWF dam number = 587
OR   SWF dam number = 588
OR   SWF dam number = 589
THEN Dam located
AND  Alldams recordno := SWF dam number
!
RULE to cycle
IF   Division abbreviation = SWD
```

```
AND  District abbreviation = SWF
AND  Counter = 1
THEN Dam located
AND  dam number := SWF dam number
AND  DISPLAY wrong number entered
AND  FORGET dam number
AND  FORGET SWF dam number
AND  FORGET Dam located
AND  counter := counter + 1
AND  CYCLE
!
RULE to cycle
IF   Division abbreviation = SWD
AND  District abbreviation = SWF
AND  Counter = 2
THEN Dam located
AND  dam number := SWF dam number
AND  FORGET dam number
AND  FORGET SWF dam number
AND  FORGET Dam located
AND  counter := counter + 1
AND  CYCLE
!
RULE to locate dam within South Western Division
IF   Division abbreviation = SWD
AND  District abbreviation = SWG
AND  DISPLAY No dams SWG
AND  ASK Name of dam
THEN No dam information
AND  Type is := UNKNOWN
AND  Dam ID := ""
!
RULE to locate dam within South Western Division
IF   Division abbreviation = SWD
AND  District abbreviation = SWL
AND  counter < 3
AND  SWL dam number = 8
OR   SWL dam number = 17
OR   SWL dam number = 22
OR   SWL dam number = 484
OR   SWL dam number = 485
OR   SWL dam number = 487
OR   SWL dam number = 488
OR   SWL dam number = 489
OR   SWL dam number = 490
OR   SWL dam number = 491
OR   SWL dam number = 493
OR   SWL dam number = 494
OR   SWL dam number = 495
OR   SWL dam number = 496
OR   SWL dam number = 497
OR   SWL dam number = 498
```

```
OR    SWL dam number = 499
OR    SWL dam number = 500
OR    SWL dam number = 502
OR    SWL dam number = 586
THEN  Dam located
AND   Alldams recordno := SWL dam number
AND   dam number := SWL dam number
!
RULE  to cycle
IF    Division abbreviation = SWD
AND   District abbreviation = SWL
AND   Counter = 1
THEN  Dam located
AND   dam number := SWL dam number
AND   DISPLAY wrong number entered
AND   FORGET dam number
AND   FORGET SWL dam number
AND   FORGET Dam located
AND   counter := counter + 1
AND   CYCLE
!
RULE  to cycle
IF    Division abbreviation = SWD
AND   District abbreviation = SWL
AND   Counter = 2
THEN  Dam located
AND   dam number := SWL dam number
AND   FORGET dam number
AND   FORGET SWL dam number
AND   FORGET Dam located
AND   counter := counter + 1
AND   CYCLE
!
RULE  to locate dam within South Western Division
IF    Division abbreviation = SWD
AND   District abbreviation = SWT
AND   counter < 3
AND   SWT dam number = 503
OR    SWT dam number = 504
OR    SWT dam number = 505
OR    SWT dam number = 506
OR    SWT dam number = 507
OR    SWT dam number = 508
OR    SWT dam number = 509
OR    SWT dam number = 511
OR    SWT dam number = 513
OR    SWT dam number = 514
OR    SWT dam number = 515
OR    SWT dam number = 516
OR    SWT dam number = 517
OR    SWT dam number = 518
OR    SWT dam number = 519
```

```
 OR    SWT dam number = 520
 OR    SWT dam number = 521
 OR    SWT dam number = 523
 OR    SWT dam number = 524
 OR    SWT dam number = 525
 OR    SWT dam number = 527
 OR    SWT dam number = 528
 OR    SWT dam number = 531
 OR    SWT dam number = 533
 OR    SWT dam number = 568
 OR    SWT dam number = 569
 OR    SWT dam number = 570
 OR    SWT dam number = 571
 OR    SWT dam number = 576
 OR    SWT dam number = 577
 OR    SWT dam number = 580
 OR    SWT dam number = 581
 OR    SWT dam number = 582
 OR    SWT dam number = 583
 OR    SWT dam number = 585
 OR    SWT dam number = 592
 OR    SWT dam number = 593
 OR    SWT dam number = 594
THEN Dam located
AND  Alldams recordno := SWT dam number
!
RULE to cycle
IF   Division abbreviation = SWD
AND  District abbreviation = SWT
AND  Counter = 1
THEN Dam located
AND  dam number := SWT dam number
AND  DISPLAY wrong number entered
AND  FORGET dam number
AND  FORGET SWT dam number
AND  FORGET Dam located
AND  counter := counter + 1
AND  CYCLE
!
RULE to cycle
IF   Division abbreviation = SWD
AND  District abbreviation = SWT
AND  Counter = 2
THEN Dam located
AND  dam number := SWT dam number
AND  FORGET dam number
AND  FORGET SWT dam number
AND  FORGET Dam located
AND  counter := counter + 1
AND  CYCLE
!
!    DISPLAY SECTION
```

!
DISPLAY wrong number entered

You have entered the number [dam number]

That number is not on the list for this District.

Please be sure to enter a whole number for your selection (e.g. 36 NOT 36.2) and that the number is on the list.

Press the F7 key to PRINT this page.
Press the ENTER key to continue.
!
!
DISPLAY cdam database 1

[Name of dam]

Dam ID - [Dam ID] Information as of - [date of info2]

PURPOSE
[Purpose is]

DESCRIPTION	CURRENT INFORMATION
State	[State]
County	[County]
Year completed	[Year completed(4,0)]
River	[River]
Lake	[Lake]
Nearest downstream city	[Closest city]
Distance	[distance(3,0)] miles
Population	[population(6,0)]
Category	[COE category]

Press the F7 key to PRINT this page. Press the ENTER key to continue.
!
DISPLAY cdam database 2

[Name of dam]

Dam ID - [Dam ID] Information as of - [date of info2]

Normal capacity	[Normal capacity(7,0)] ac. ft.
Maximum capacity	[Maximum capacity(7,0)] ac. ft.
Hydraulic height	[Hydraulic height(3,0)] ft.
Structure height	[Str height(3,0)] ft.
Crest length	[Crest(6,0)] ft.
Seismic zone	[Seismic rating]
Hazard potential	[Potential hazard] or [Hazardcode]
Type of spillway	[Spillway is]
Spillway width	[Spillway width] ft.
Spillway discharge	[Spillway discharge] cu.ft./s
Number of locks	[Number of locks(2,0)]

Press the F7 key to PRINT this page. Press the ENTER key to continue.
!
DISPLAY No dams LMM

According to my information there are no Corps of Engineer Dams located within the Memphis District of the Lower Mississippi Valley Division. Therefore, we will continue this consultation with only the information you can provide.

Press the F7 key to PRINT this page.
Press the ENTER key to continue.
!
DISPLAY No dams NCC

According to my information there are no Corps of Engineer Dams located within the Chicago District of the North Central Division. Therefore, we will continue this consultation with only the information you can provide.

Press the F7 key to PRINT this page.
Press the ENTER key to continue.
!
DISPLAY No dams POF

According to my information there are no Corps of Engineer Dams located within the Far East District of the Pacific Ocean Division. Therefore, we will continue this consultation with only the information you can provide.

Press the F7 key to PRINT this page.
Press the ENTER key to continue.
!
DISPLAY No dams POH

According to my information there are no other Corps of Engineer Dams located within the Honolulu District of the Pacific Ocean Division. Therefore, we will continue this consultation with only the information you can provide.

Press the F7 key to PRINT this page.
Press the ENTER key to continue.
!
DISPLAY No dams POJ

According to my information there are no Corps of Engineer Dams located within the Japan District of the Pacific Ocean Division. Therefore, we will continue this consultation with only the information you can provide.

Press the F7 key to PRINT this page.
Press the ENTER key to continue.
!
DISPLAY No dams SAC

According to my information there are no other Corps of Engineer Dams located within the Charleston District of the South Atlantic Division. Therefore, we will continue this consultation with only the information you can provide.

Press the F7 key to PRINT this page.
Press the ENTER key to continue.

!
DISPLAY No dams SWG

According to my information there are no other Corps of Engineer Dams located within the Galveston District of the Southwestern Division. Therefore, we will continue this consultation with only the information you can provide.

Press the F7 key to PRINT this page.
Press the ENTER key to continue.
!
DISPLAY Primary seepage instructions

On the next page, I am going to ask you to tell me one of the primary manifestations of seepage or leakage that you have observed at [Name of dam].

It can be located anywhere - not just on the embankment.

To make your selection, you will use the UP/DOWN ARROW keys to select a type of seepage manifestation and then press ENTER.

If you find that you need help once you start your selections, press the F5 key for additional technical and operational instructions.

Press the F7 key to PRINT this page.
Press the ENTER key to continue.
!
!
! EXPAND SECTION
!
EXPAND Primary seepage manifestation

TECHNICAL INSTRUCTIONS

Evidence of damage to appurtenent structures can be -
leaky or strained conduit
conduit carrying soil deposits
cracked or misaligned structures such as the spillway or stilling basin

Signs of mass movement can be -
slides, sloughs, bulges, sag in crest, cracks, misaligned guard rails, etc.

OPERATIONAL INSTRUCTIONS

1. Use UP/DOWN ARROW keys.
2. Use the ENTER key to select an item.

Press the F8 key to return.
!
! TEXT SECTION

!
TEXT Type of dam

I have the following information on your dam construction:

Dam construction - [Type is]

Please select one of the following categories that best describes the type of construction at [Name of dam] where the leakage is occurring.

Use the UP/DOWN ARROW keys to make your selection and then press ENTER.

!
TEXT Name of dam

What is the name of the dam?

!
TEXT Primary seepage manifestation
!
TEXT Display information from cdam database

I have additional information on [Name of dam] from the COE dams database.

Would you like to see this information?

!
TEXT LMN dam number

Please enter the number associated with the dam of concern. Please use the number from the following list:

642 Red River W. W. Lock & Dam No. 3
650 Red River W. W. Lock & Dam No. 1

!
TEXT LMS dam number

Please enter the number associated with the dam of concern. Please use the number from the following list:

23	Wappapello Dam	638	Crab Orchard
28	Kaskaskia Lock & Dam	639	Little Grassy
30	Lock & Dam 24	640	Devils Kitchen Dam
31	Lock & Dam 25	645	Pine Ford Lake
32	Locks 27	646	Union Reservoir
33	Lock & Dam 26	651	Clarence Cannon
34	Rend Lake Dam	652	Lock & Dam No 26 (new)
35	Re-regulation Dam		

!
TEXT LMK dam number

Please enter the number associated with the dam of concern. Please use the number from the following list:

3	Arkabutla Dam	26	Wallace Lake Dam
4	Bayou de Siard Dam	391	Pearl River Lock 1
5	Blakely Mountain Dam	603	Pools Bluff Sill & Pearl River Lock 3
6	Columbia Closure Dam	641	John Overton Lock & Dam
7	Columbia Lock & Dam	643	Red River W W Lock & Dam 4
9	Degray Dam	644	Red River W W Lock & Dam 5
10	Degray Reregulating Dam	648	Calion Lock & Dam
13	Jonesville Closure Dam	649	Felsenthal Lock & Dam
14	Jonesville Lock & Dam	653	Waterways Experiment Sta.
15	Little River Closure Dam		
18	Lock & Dam No 6		
19	Lock & Dam No 8		
20	Narrows Dam		
24	Bayou Bodcau Dam		
25	Caddo Dam		

!
TEXT MRK dam number

Please enter the number associated with the dam of concern. Please use the number from the following list:

36	Clinton Dam	51	Wilson Dam
37	Harlan County Dam	534	Lake Mahoney Dam
38	Harry S Truman Dam	535	Prairie Lee Lake Dam
39	Kanopolis Dam	554	Hillsdale Dam
40	Long Branch Dam	555	Longview Dam
41	Marshall Creek Dam	556	Blue Springs Dam
42	Melvern Dam		
43	Milford Dam		
44	Perry Dam		
45	Pomme de Terre Dam		
46	Pomona Dam		
47	Rathbun Dam		
48	Smithville Dam		
49	Stockton Dam		
50	Tuttle Creek Dam		

!
TEXT MRO dam number

Please enter the number associated with the dam of concern. Please use the number from the following list:

52	Bear Creek	76	Sioux Falls Diversion Dam
54	Bluestem Dam - Site 4	77	Spring Gulch
57	Bullhook Dam	78	Stagecoach Dam - Site 9
58	Bullhook Lower Diversion	79	Twin Lakes Dam - Site 13
59	Chatfield Dam	80	Wagon Train Dam - Site 8
60	Cherry Creek Dam	81	Westerly Creek Colorado
62	Conestoga Dam - Site 12	551	Papillion Creek & Trib

- Site 16

63 Cottonwood Springs Dam
67 Gavins Point Dam
68 Holmes Lake - Site 17
69 Oahe Dam
70 Olive Creek Dam - Site 2
71 Papillion Creek - Site 11
74 Cedar Canyon Dam
75 Scott Coulee Dam
553 Papillion Creek & Trib - Site 20

!

TEXT NED dam number

Please enter the number associated with the dam of concern. Please use the number from the following list:

164 Ball Mountain Dam
165 Barre Falls Dam
166 Birch Hill Dam
167 Black Rock Dam
168 Blackwater Dam
169 Buffumville Dam
170 Colebrook River Dam
171 Conant Brook Dam
173 East Brimfield Dam
174 Edward MacDowell Dam
175 Everett Dam
176 Franklin Falls
177 Hall Meadow Brook Dam
178 Hancock Brook Dam
181 Hopkinton Dam
182 Knightville Dam
183 Littleville Dam
184 Mad River Dam
186 North Hartland Dam
188 Northfield Brook Dam
189 Otter Brook Dam
190 Sucker Brook Dam
191 Surry Mountain Dam
194 Tully Dam
195 Union Village Dam
197 West Thompson Dam
198 Westville Dam
543 Charles River Dam (new)
544 Cherryfield Dam
545 East Branch Dam
546 Smelt Brook
547 Wrights Reservoir Dam

!

TEXT NAB dam number

Please enter the number associated with the dam of concern. Please use the number from the following list:

```
  1  Almond Dam
  2  Arkport Dam
 84  Atkisson Dam
 85  Aylesworth Creek Dam
 86  Bloomington Dam
 87  Cowanesque Dam
 89  Foster Joseph Sayers Dam
 91  Raystown Dam
 92  Stillwater Dam
 93  Tioga Dam
 94  Whitney Point Dam
 95  York Indian Rock Dam
 96  East Sidney Dam
536  Savage River Dam
!
TEXT  NAN dam number
```

Please enter the number associated with the dam of concern. Please use the number from the following list:

```
 97  Troy Lock & Dam No 1
172  East Barre Dam
540  Wrightsville Dam
!
TEXT  NAO dam number
```

Please enter the number associated with the dam of concern. Please use the number from the following list:

```
 98  Bowies Dam
637  Airfield Dam

!
TEXT  NAP dam number
```

Please enter the number associated with the dam of concern. Please use the number from the following list:

```
100  Beltzville Dam
101  Blue Marsh Dam
102  Francis E. Walter Dam
103  General Edgar Jadwin

!
TEXT  NCB dam number
```

Please enter the number associated with the dam of concern. Please use the number from the following list:

655 Onondaga Dam
661 Mt. Morris Dam

!
TEXT NCE dam number

Please enter the number associated with the dam of concern. Please use the number from the following list:

106 Depere Gen Laws
110 Kaukauna Locks & Dam
112 Little Chute
113 Little Kaukauna Gen Laws
114 Lower Appleton Dam
116 Menasha Gen Laws
118 Rapid Croche Locks & Dam
121 Upper Appleton Dam
666 Cedars Lock & Dam

!
TEXT NCR dam number
Please enter the number associated with the dam of concern. Please use the number from the following list:

105 Brandon Road Lock & Dam
107 Dresden Island Lock & Dam
108 Farmdale
109 Fondulac
111 La Grange Lock & Dam
115 Marseilles Dam
117 Peoria Lock & Dam
119 Starved Rock Lock & Dam
120 Thomas J. O'Brien Controlling Work
122 Bear Creek Dam
123 Big Creek Barrier Dam
124 Big Creek Terminal Dam
125 Coralville Dam
126 Mississippi Lock & Dam No 19
127 Mississippi Lock & Dam No 20
128 Mississippi Lock & Dam No 21
129 Mississippi River Lock
130 Mississippi River Lock
131 Mississippi River Lock
132 Mississippi River Lock
133 Mississippi River Lock
135 Mississippi River Lock
136 Mississippi River Lock
537 Jenifer Creek Dam
541 Rocky Run Dam
542 Virden Creek Dam
654 Lock & Dam 22
656 Page Park Dam
657 Alpine Dam

!
TEXT NCS dam number
Please enter the number associated with the dam of concern. Please use the number from the following list:

139 Eau Galle
140 Gull Lake
141 Highway 75 Dam
142 Lac Qui Parle Dam
145 Winnibigoshish Dam
146 Leech Lake Dam
157 White Rock Dam
161 Sandy Lake Lock & Dam
162 St. Anthony Falls Lower Lock & Dam
163 St. Anthony Falls Upper Lock & Dam
659 Lake Darling

147 Lock & Dam No 6
148 Lock & Dam No 10
149 Lock & Dam No 3
150 Lock & Dam No 5
151 Lock & Dam No 5A
152 Lock & Dam No 7
153 Locks & Dam No 1
154 Locks & Dam No 2
155 Lower Red Lake Dam
156 Marsh Lake Dam
662 Chippawa Diversion Dam
663 Lock & Dam No 4
664 Lock & Dam No 9
665 Lock & Dam No 8

!
TEXT NPA dam number

Please enter the number associated with the dam of concern. Please use the number from the following list:

199 Chena River Lakes
667 Snettisham

!
TEXT NPP dam number

Please enter the number associated with the dam of concern. Please use the number from the following list:

200 Applegate Dam
201 Big Cliff Dam
202 Blue River Dam
203 Bonneville
204 Cottage Grove
205 Cougar
206 Detroit
207 Dexter
208 Dorena
210 Fern Ridge
212 Green Peter
215 Lookout Point
217 The Dalles Lock & Dam

!
TEXT NPS dam number
Please enter the number associated with the dam of concern. Please use the number from the following list:

218 Albeni Falls
220 Hiram M. Chittenden Lock & Dam
680 Upper Baker Dam
684 Wynooche Fish Barrier Dam

!
TEXT NPW dam number

Please enter the number associated with the dam of concern. Please use the number from the following list:

226 Ice Harbor Dam
228 Lower Granite Lock & Dam
229 Lower Monumental Dam
230 Lucky Peak
231 McNary Lock & Dam
233 Ririe
674 Mason Dam
675 Bully Creek Dam
676 Little Wood River Dam
677 Palisades Dam
678 Agency Valley Dam
679 Warm Springs Dam
!
TEXT ORH dam number
Please enter the number associated with the dam of concern. Please use the number from the following list:

237 Beech Fork Lake Dam
238 Belleville Lock & Dam
239 Bluestone Dam
244 Deer Creek Dam
245 Delaware Dam
247 Dillon Dam
248 Dover Dam
249 East Lynn Dam
250 Fishtrap Dam
251 Gallipolis Locks & Dam
252 Grayson Dam
253 Greenup Lock & Dam
255 John W. Flannagan Dam
257 Little Beaver State Park Dam
258 London Locks & Dam
259 Marmet Locks & Dam
262 North Branch of Kokosing Dam
263 Paint Creek Dam
266 R.D. Bailey Dam
267 Racine Locks & Dam
269 Summersville Dam
270 Sutton Dam
272 Tom Jenkins Dam
273 Willow Island Locks & Dam
275 Winfield Locks & Dam
329 North Fork of Pound Dam
560 Yatesville Dam
566 Cpt. Anthony Meldahl Locks & Dam
567 Paintsville Dam
!
TEXT ORL dam number
Please enter the number associated with the dam of concern. Note that there are 2 pages of dam names. Use the F1 to page between the 2 screens. The number will be entered on the second page.

276 Barren River Lock & Dam No 1
277 Brookville Lake Dam
278 Buckhorn Lake Dam
280 Cagles Mill Lake Dam
281 Cannelton Locks & Dam
282 Carr Fork Lake Dam
283 Cave Run Lake Dam
285 Clarence J. Brown Dam
287 Green River Lake Dam
295 Kentucky River Lock & Dam 2
296 Kentucky River Lock & Dam 3
297 Kentucky River Lock & Dam 4
298 Kentucky River Lock & Dam 5
299 Kentucky River Lock & Dam 6
300 Kentucky River Lock & Dam 7
301 Kentucky River Lock & Dam 8
302 Kentucky River Lock & Dam 9
303 Kentucky River Lock & Dam 10

288 Green River Lock & Dam No 1
289 Green River Lock & Dam No 2
290 Green River Lock & Dam No 3
291 Green River Lock & Dam No 5
292 Green River Lock & Dam No 6
293 Huntington Lake Dam
294 Kentucky River Lock & Dam 1
312 Newburgh Locks & Dam
313 Nolin Lake Dam
314 Ohio River Lock & Dam 52
315 Ohio River Lock & Dam 53
316 Patoka Lake Dam
317 Rough River Lake Dam
318 Salamonie Lake Dam
319 Uniontown locks & Dam
320 West Fork of Mill Creek Dam
559 Barren River Lake Dam
304 Kentucky River Lock & Dam 11
305 Kentucky River Lock & Dam 12
306 Kentucky River Lock & Dam 13
307 Kentucky River Lock & Dam 14
308 Markland Locks & Dam
309 McAlpine Locks & Dam
311 Monroe Lake Dam
562 Smithland Locks & Dam
563 Taylorsville Lake Dam

!
TEXT ORN dam number

Please enter the number associated with the dam of concern. Please use the number from the following list:
321 Barkley Dam
323 Cheatham Dam
324 Cordell Hull Dam
325 Dale Hollow Dam
326 J. Percy Priest Dam
327 Laurel Dam
328 Martins Fork Dam
330 Old Hickory Dam

!
TEXT ORP dam number
Please enter the number associated with the dam of concern. Note that there are 2 pages of dam names. Use the F1 to page between the 2 screens. The number will be entered on the second page.

254 Hannibal Locks & Dam
332 Allegheny Lock & Dam 2
333 Allegheny Lock & Dam 3
334 Allegheny Lock & Dam 4
335 Allegheny Lock & Dam 5
336 Allegheny Lock & Dam 7
337 Allegheny Lock & Dam 8
338 Allegheny Lock & Dam 9
339 Berlin Dam
340 Conemaugh Dam
341 Crooked Creek Dam
342 Dashields Locks & Dam
344 Emsworth Locks & Dams
345 Hildebrand Lock & Dam
348 Monongahela Locks & Dam 3
349 Mahoning Creek Dam
350 Maxwell Locks & Dam
351 Michael J. Kirwan Dam & Reservoir
352 Monongahela Lock & Dam 7
353 Monongahela Lock & Dam 8
354 Monongahela Lock & Dam 2
355 Monongahela Lock & Dam 4
356 Montgomery Locks & Dam
357 Morgantown Lock & Dam
358 Mosquito Creek Dam
359 New Cumberland Locks & Dam
360 Opekiska Lock & Dam

346 Kinzua Dam
347 Allegheny Lock & Dam 6
361 Pike Island Locks & Dam
362 Shenango Dam

363 Tionesta Dam
364 Tygart Dam
365 Union City Dam
366 Loyalhanna Dam
367 Woodcock Creek Dam
368 Youghiogheny Dam
561 Stonewall Jackson Dam, WV

!
TEXT SAJ dam number
Please enter the number associated with the dam of concern. Please use the number from the following list:

371 Henry H. Buckman Dam
373 Lake Tsala Apopka Structure 353
374 Moss Bluff Lock & Dam
375 Rodman Dam & Spillway
376 W.P. Franklin Lock & Dam
605 Cerrilos, P.R.
606 Portugues, P.R.

!
TEXT SAM dam number
Please enter the number associated with the dam of concern. Please use the number from the following list:

377 Bogue Chitto Sill & Pearl River Lock 2
378 Buford
379 Carters Main Dam & Dam
380 Carters Reregulation Dam
381 Claiborne Lock & Dam Tenn_Tom
382 Coffeeville Lock & Dam
383 Demopolis Lock & Dam
384 George W. Andrews Lock & Dam
385 Holt Lock, Dam & Powerhouse
386 Jim Woodruff Dam
387 John Hollis Bankhead Lock, Dam & Powerhouse
388 Robert F. Henry Lock & Dam
389 Millers Ferry Lock, Dam & Powerhouse
390 Okatibbee Dam
393 Warrior Lock & Dam
394 West Point
395 William Bacon Oliver Lock
564 Elk River Dam
595 Aberdeen Lock & Dam
596 Aliceville Lock & Dam
597 Columbus Lock & Dam
598 Gainesville Lock & Dam
599 Lock A Tenn_Tom
600 Lock B Tenn_Tom
601 Lock C Tenn_Tom
607 Lock D Tenn_Tom
608 Lock E Tenn_Tom
685 Allatoona Lake Dam & Powerhouse
686 Bay Springs Lock & Dam

!

TEXT SAS dam number

Please enter the number associated with the dam of concern. Please use the number from the following list:

396 Clarks Hill Dam
604 New Savannah Bluff Lock & Dam
610 Richard B. Russell Dam
723 Cooper River Rediversion

!
TEXT SAW dam number

Please enter the number associated with the dam of concern. Please use the number from the following list:

370 W. Kerr Scott Dam
399 John H. Kerr Dam
400 Lock & Dam No. 2
401 Lock & Dam No. 1
402 Philpott Dam
403 William O. Huske Lock & Dam
602 Falls Lake Dam
609 Randleman Lake Dam

!
TEXT SPL dam number

Please enter the number associated with the dam of concern. Please use the number from the following list:

421 Brea Lake
422 Carbon Canyon Dam
423 Cave Buttes
424 Dreamy Draw Dam
425 Fullerton Dam
426 Hansen Dam
427 Lopez Dam
428 Mathews Canyon Dam
429 Mojave Dam
431 Pine Canyon Dam
432 Prado Dam
433 Reclamation Dam Edwards Air Base
436 Santa Fe Dam
437 Sepulveda Dam
438 Tat Momolikot
439 Whitlow Ranch Dam
440 Whittier Narrows Dam
613 Tahchevah Creek Detention
627 New River Dam
628 Adobe Dam
682 Alamo Dam

!
TEXT SPK dam number
Please enter the number associated with the dam of concern. Please use the number from the following list:

404 Bear Dam
405 Black Butte Lake
406 Buchanan Dam
407 Burns Dam
408 Farmington Dam
409 Harry L. Englebright Lake
411 Isabella Lake
412 Mariposa Dam
414 New Hogan Lake
415 New Melones Lake
416 North Fork Dam
417 Owens Dam
418 Pine Flat Lake
419 Success Lake
420 Terminus Dam
548 Big Wash Lower
549 Folsom
550 Mather Dam
611 Big Dry Creek Dam
612 Chester Diversion Dam
621 Dutch Gulch Dam
622 Tehama Dam
623 Castle
624 Bear
626 Little Dell Lake
630 Camanche Dam
631 Indian Valley 1080_002
633 New Exchequer 58_002
634 Lake Oroville
635 Don Pedro 68_007
636 New Bullards Bar 1034
681 Havstack

!
TEXT SPN dam number

Please enter the number associated with the dam of concern. Please use the number from the following list:

441 Coyote Valley Dam
442 Salinas Dam
629 Warm Springs Dam
632 Del Valle 1_056

!
TEXT SWA dam number

Please enter the number associated with the dam of concern. Please use the number from the following list:

445 Conchas Dam
446 Two Rivers Dam
447 Galisteo Dam
448 Jemez Canyon Dam
450 Las Cruces
451 Santa Rosa Dam
452 Mountain Park Dam
453 Northgate Dam
454 Pershing Dam
455 Pinon Canyon Dam
456 Range Dam
457 Sunrise Dam
458 Trinidad
572 Oxidation Pond Dam
574 McKelligon Dam
575 Keystone Dam
579 Mesa Dam
590 Thorn Drive Dam
591 Mulberry Dam

!
TEXT SWF dam number

Please enter the number associated with the dam of concern. Please use the number from the following list:

460 Bardwell Dam
461 Belton Dam
462 Benbrrok Dam
465 Granger Dam
467 Hords Creek Dam
469 Lewisville Dam
470 Navarro Mills Dam
473 Proctor Dam
475 Somerville Dam
477 Town Bluff Dam
478 Waco Dam
479 Whitney Dam
480 Wright Patman Dam
578 Millican Lake
587 Ray Roberts
588 Joe Pool Lake
589 Cooper

!
TEXT SWL dam number

Please enter the number associated with the dam of concern. Please use the number from the following list:

8 Dam No. 2 Arkansas River
17 Lock & Dam No. 4
22 Norrell Lock & Dam
484 Blue Mountain
485 Bull Shoals
487 Dardanelle Lock & Dam
488 David D. Terry Lock & Dam
489 DeQueen
490 Dierks
491 Gillham
493 Lock & Dam No. 13
494 Lock & Dam No. 5
495 Lock & Dam No. 9
496 Millwood Dam
497 Murray Lock & Dam
498 Nimrod
499 Norfork
500 Ozark Lock & Dam
502 Toad Suck Ferry Lock & Dam
586 Conway Water Supply Dam

!
TEXT SWT dam number

Please enter the number associated with the dam of concern. Note that there are 2 pages of dam names. Use the F1 to page between the 2 screens. The number will be entered on the second page.

503 Birch
504 Broken Bow
505 Canton
506 Chouteau Lock & Dam 17
507 Council Grove
508 Denison Dam
509 El Dorado Lake
511 Eufaula
513 Fort Gibson
514 Fort Supply
515 Great Salt Plains
516 Heyburn
520 Kaw
521 Keystone
523 Newt Graham Lock & Dam 18
524 Oologah
525 Optima
527 Robert S. Kerr Lock & Dam 15
528 Tenkiller
531 Webbers Falls Lock & Dam 16
533 W.D. Mayo Lock & Dam 14
568 Pat Mayse
569 Crowder Reservoir
570 Lawtonka

517 Hugo
518 Hulah
519 John Redmond Lake
580 Arcadia Lake
581 Candy Lake
582 Clayton Lake
583 Copan Lake
585 Truscott
592 Markham Ferry Dam
593 Pensacola Dam
594 Big Hill
END

571 Lake Kemp
576 Big Pine
577 Shidler

APPENDIX K

DWS KNOWLEDGE BASE PRINTOUT

TITLE Wet Spots DISPLAY

WET

SPOTS

This knowledge base of DAMSEAL will help you in ascertaining the cause of the wet spots at your dam.

Press the ENTER key to continue.

```
!
!  SHARED INCLUDE FILE
!
$  SHAREFIL.PRL
!
!OBJECT Determine cause of seepage
SUPPRESS ALL
CONFIDENCE OFF
GOALSELECT OFF
!
!  GOALS
!
1. Determine cause of seepage
   1.1 Continue
2. Unable to determine cause of seepage
!
!   EMBANKMENT RULES
!
RULE to determine wet spot caused by bad drainage
IF   Type of dam IS earth embankment
AND  Location of wet spots IS embankment
AND  High piezometric level in embankment
THEN Determine cause of seepage IS bad drainage
AND  DISPLAY bad drainage info 1
AND  PAINT COE8.PIC
AND  DISPLAY bad drainage info 2
AND  PAINT COE5.PIC
!
RULE to determine wet spot caused by bad filter
IF   Type of dam IS earth embankment
AND  Location of wet spots IS embankment
AND  Wet spots are extensive in size
THEN Determine cause of seepage IS bad filter
AND  DISPLAY bad filter info
AND  PAINT COE6.PIC
!
RULE to determine wet spot caused by bad material
```

```
IF   Type of dam IS earth embankment
AND  Location of wet spots IS embankment
AND  Localized wet spots
THEN Determine cause of seepage IS bad material
AND  DISPLAY bad material info 1
AND  PAINT COE21.PIC
AND  DISPLAY bad material info 2
AND  PAINT COE18.PIC
AND  PAINT COE6.PIC
!
RULE to determine wet spot caused by leaky facing
IF   Type of dam IS rockfilled
AND  Location of wet spots IS embankment
AND  Excessive seepage at the wet spots
AND  There is an upstream facing
THEN Determine cause of seepage IS leaky facing
AND  DISPLAY leaky facing info
!
RULE to determine wet spot caused by cracked core
IF   Type of dam IS rockfilled
AND  Location of wet spots IS embankment
AND  Excessive seepage at the wet spots
AND  The dam has a clay core
THEN Determine cause of seepage IS cracked core
AND  DISPLAY cracked core info
!
RULE to determine wet spot caused by high groundwater
IF   Type of dam IS earth embankment
AND  Location of wet spots IS embankment
AND  Wet spots are near the abutment
AND  High piezometric levels in abutment
AND  NOT The abutment is fractured rock
THEN Determine cause of seepage IS high groundwater
AND  DISPLAY high groundwater info
AND  PAINT COE5.PIC
!
RULE to determine wet spot caused by bad preparation
IF   Type of dam IS earth embankment
AND  Location of wet spots IS embankment
AND  Wet spots are near the abutment
AND  Wet spots are below groundwater table
AND  NOT The abutment is fractured rock
THEN Determine cause of seepage IS bad preparation
AND  DISPLAY bad preparation info 1
AND  PAINT COE8.PIC
AND  DISPLAY bad preparation info 2
AND  PAINT COE6.PIC
!
RULE to determine wet spot caused by hydraulic fracturing
IF   Type of dam IS earth embankment
AND  Location of wet spots IS embankment
AND  Wet spots are near the abutment
```

```
AND  Recent precipitation
AND  NOT Wet spots associated with recent precipitation
AND  Sudden increase in flow of wet spot
THEN Determine cause of seepage IS hydraulic fracturing
AND  DISPLAY hydraulic fracturing info
!
RULE to determine wet spot caused by hydraulic fracturing
IF   Type of dam IS earth embankment
AND  Location of wet spots IS embankment
AND  Wet spots are near the abutment
AND  NOT Recent precipitation
AND  Sudden increase in flow of wet spot
THEN Determine cause of seepage IS hydraulic fracturing
AND  DISPLAY hydraulic fracturing info
!
RULE to determine wet spot caused by temporary saturation
IF   Type of dam IS earth embankment
AND  Location of wet spots IS embankment
AND  Recent precipitation
AND  Wet spots associated with recent precipitation
AND  NOT High piezometric level in embankment
THEN Determine cause of seepage IS temporary saturation
AND  DISPLAY temporary saturation info
AND  PAINT COE8.PIC
!
!    concrete dams
!
RULE to determine wet spot caused by bad joints
IF   Type of dam IS concrete or roller compacted concrete
AND  Location of wet spots IS embankment
AND  Leaks associated with structural features
AND  Leaks at joints between the monoliths
THEN Determine cause of seepage IS bad joints
AND  DISPLAY bad joints info
!
RULE to determine wet spot caused by bad seals
IF   Type of dam IS concrete or roller compacted concrete
AND  Location of wet spots IS embankment
AND  Leaks associated with structural features
AND  Wet spots associated with construction lifts
THEN Determine cause of seepage IS bad seals
AND  DISPLAY bad seals info
!
RULE to determine wet spot caused by bad conduits
IF   Type of dam IS concrete or roller compacted concrete
AND  Location of wet spots IS embankment
AND  Leaks associated with structural features
AND  There is a pipe or conduit in embankment
AND  Wet spots located near conduit
THEN Determine cause of seepage IS bad conduits
AND  DISPLAY bad conduits info
!
```

```
RULE to determine wet spot caused by leaky concrete
IF   Type of dam IS concrete or roller compacted concrete
AND  Location of wet spots IS embankment
AND  NOT Leaks associated with structural features
AND  Large increase in flow rate with little pool level change
THEN Determine cause of seepage IS leaky concrete
AND  DISPLAY leaky concrete info
!
!   EMBANKMENT/ABUTMENT INTERFACE RULES
!
RULE to determine wet spot caused by hydraulic fracturing
IF   Type of dam IS earth embankment
AND  Location of wet spots IS abutment_embankment interface
AND  Sudden increase in flow of wet spot
THEN Determine cause of seepage IS hydraulic fracturing
AND  DISPLAY hydraulic fracturing info
!
!   ABUTMENT RULES
!
RULE to determine wet spot caused by wet lenses
IF   Type of dam IS earth embankment
OR   Type of dam IS concrete or roller compacted concrete
OR   Type of dam IS rockfilled
AND  Location of wet spots IS abutment
AND  Wets spots are of limited areal extent
AND  The abutment is soil
AND  Abutment soil is pervious
THEN Determine cause of seepage IS wet lenses
AND  DISPLAY wet lenses info 1
AND  PAINT COE8.PIC
AND  DISPLAY wet lenses info 2
AND  PAINT COE6.PIC
!
RULE to determine wet spot caused by leaky abutment
IF   Type of dam IS earth embankment
OR   Type of dam IS concrete or roller compacted concrete
OR   Type of dam IS rockfilled
AND  Location of wet spots IS abutment
AND  The abutment is fractured rock
THEN Determine cause of seepage IS leaky abutment
AND  DISPLAY leaky abutment info 1
AND  PAINT COE6.PIC
AND  DISPLAY leaky abutment info 2
AND  PAINT COE23.PIC
!
!   FOUNDATION RULES
!
RULE to determine wet spot caused by high piezometric pressures
IF   Type of dam IS earth embankment
OR   Type of dam IS concrete or roller compacted concrete
OR   Type of dam IS rockfilled
AND  Location of wet spots IS foundation
```

```
AND  Near quick conditons associated with the wet spots
THEN Determine cause of seepage IS high piezometric pressures
AND  DISPLAY high piezometric pressures info 1
AND  PAINT COE14.PIC
AND  DISPLAY high piezometric pressures info 2
AND  PAINT COE6.PIC
!
RULE to determine wet spot caused by leaky foundation
IF   Type of dam IS earth embankment
OR   Type of dam IS concrete or roller compacted concrete
OR   Type of dam IS rockfilled
AND  Location of wet spots IS foundation
AND  Seepage emerging downstream of toe
AND  The foundation is fractured rock
THEN Determine cause of seepage IS leaky foundation
AND  DISPLAY leaky foundation info
AND  PAINT COE27.PIC
!
RULE to chain to the next knowledge base
IF   Determine cause of seepage IS hydraulic fracturing
OR   Determine cause of seepage IS bad drainage
OR   Determine cause of seepage IS bad material
OR   Determine cause of seepage IS temporary saturation
OR   Determine cause of seepage IS bad preparation
OR   Determine cause of seepage IS high groundwater
OR   Determine cause of seepage IS bad filter
OR   Determine cause of seepage IS leaky facing
OR   Determine cause of seepage IS cracked core
OR   Determine cause of seepage IS leaky concrete
OR   Determine cause of seepage IS bad joints
OR   Determine cause of seepage IS bad conduits
OR   Determine cause of seepage IS bad seals
OR   Determine cause of seepage IS leaky abutment
OR   Determine cause of seepage IS wet lenses
OR   Determine cause of seepage IS high piezometric pressures
OR   Determine cause of seepage IS leaky foundation
THEN Continue
AND  FORGET Seepage is related to wet spots
AND  NOT Seepage is related to wet spots
AND  CHAIN DC.KNB
ELSE Unable to determine cause of seepage
AND  DISPLAY Unable to determine cause
AND  FORGET Seepage is related to wet spots
AND  NOT Seepage is related to wet spots
AND  CHAIN DC.KNB
!
!  DISPLAY SECTION
!
DISPLAY hydraulic fracturing info
```

CONCLUSION

The localized wet/soft/quick spots on the embankment near the abutment or other structural interface are probably due to hydraulic fracturing.

RECOMMENDATION

If the flow rates are increasing, then an immediate reduction in pool level should be considered.
Contact the [Division name] Foundation and Material Branch.

Press the F7 key to PRINT this page.
Press the ENTER key to continue.
!
DISPLAY bad drainage info 1

CONCLUSION

The wet/soft/quick spots on the embankment are probably due to insufficient internal drainage or to clogged drains or filters.

RECOMMENDATION

If the flow rates are not excessive, install a trench drain collector system to reduce the water table and drain the area.

Information on this remedial action will be presented on the following screen.

Press the F7 key to PRINT this page.
Press the ENTER key to continue.
!
DISPLAY bad drainage info 2

RECOMMENDATION

If the flow rates are significant, install a membrane or blanket on the upstream face of the dam to reduce the inflow into the embankment.

Information on this remedial action will be presented on the following screen.

Press the F7 key to PRINT this page.
Press the ENTER key to continue.
!
DISPLAY bad material info 1

CONCLUSION

The localized wet spots on the embankment are probably due to the inappropriate selection and/or placement of embankment materials resulting in permeable layers.

This is illustrated on the next screen.

Press the F7 key to PRINT this page.
Press the ENTER key to continue.
!
DISPLAY bad material info 2

RECOMMENDATION

Install vertical sand or wick drains, if a horizontal drain is located beneath the downstream toe of the dam.

If no horizontal drain exists, then install a downstream filter berm.

Information on these two remedial actions will be presented on the following screens.

Press the F7 key to PRINT this page.
Press the ENTER key to continue.
!
DISPLAY temporary saturation info

CONCLUSION

The wet spots on the embankment are probably due to temporary saturation because of the recent precipitation. The wet spots are not considered to be a safety problem.

RECOMMENDATION

If the flow rates are not excessive, install a trench drain collector system to reduce the water table and drain the area.

This is illustrated on the next screen.

Press the F7 key to PRINT this page.
Press the ENTER key to continue.
!
DISPLAY bad preparation info 1

CONCLUSION

The wet/soft/quick spots on the embankment are probably due to loose or inadequately compacted material at the abutment/embankment interface, or they may

be due to improper foundation preparation.

RECOMMENDATION

If the flow rates are not excessive, install a trench drain collector system to reduce the water table and drain the area.

Information on this remedial action will be presented on the following screen.

Press the F7 key to PRINT this page.
Press the ENTER key to continue.
!
DISPLAY bad preparation info 2

RECOMMENDATION

If the flow rates are significant, then install a downstream filter berm.

Information on this remedial action will be presented on the following screen.

Press the F7 key to PRINT this page.
Press the ENTER key to continue.
!
DISPLAY high groundwater info

CONCLUSION

The wet/soft/quick spots on the embankment are probably caused by high groundwater levels in the abutment due to pool impoundment.

RECOMMENDATION

Extend or add an upstream impervious blanket onto the abutment intake zone.

This is illustrated on the next screen.
Press the F7 key to PRINT this page.
Press the ENTER key to continue.
!
DISPLAY bad filter info

CONCLUSION

The extensive wet/soft/quick spots on the embankment are probably caused by a lack of filters, by improper filter design (gradation, thickness, clogged filter), or by an inadequate core or cutoff.

RECOMMENDATION

If the extensive wet spots are along the toe of the embankment install a downstream filter berm.

If the elevation of the wet spots is too high to make installation of a berm practical, then install a membrane or blanket on the upstream face of the dam to reduce the inflow into the embankment.

Information on a downstream filter berm will be presented on the next screen.

Press the F7 key to PRINT this page.
Press the ENTER key to continue.
!
DISPLAY leaky facing info

CONCLUSION

The excess seepage on the downstream slope of the embankment are probably due to leakage through cracks, joints, or fissures in the upstream facing. The cracks and fissures may, in turn, be caused by deterioration of the facing, settlement of the embankment-foundation, and/or to the collapse of embankment material into voids in the foundation.

RECOMMENDATION

If the seepage from the wet spots is stable, make plans to repair or replace the upstream facing.

If the seepage is increasing, consider an immediate reduction in the pool level and make plans to repair or replace the upstream facing.
Press the F7 key to PRINT this page.
Press the ENTER key to continue.
!
DISPLAY cracked core info

CONCLUSION

The excess seepage on the downstream slope of the embankment are probably due to cracks in the core which have occurred as a result of shrinkage, differential settlement, freeze-thaw action, and/or load transfer between zones.

RECOMMENDATION

If the seepage from the wet spots is stable, make plans to repair or add an

upstream facing.

If the seepage is increasing, consider an immediate reduction in the pool level and make plans to repair or add an upstream facing.

Press the F7 key to PRINT this page.
Press the ENTER key to continue.
!
DISPLAY leaky concrete info

CONCLUSION

The wet spots on the embankment are probably due to cracks in the concrete which have been caused by shrinkage, differential movement, seismic activity, overstress, or to deterioration of the concrete due to creep.

RECOMMENDATION

Seal or reface the upstream face of the dam.

Press the F7 key to PRINT this page.
Press the ENTER key to continue.
!
DISPLAY bad joints info

CONCLUSION

The leakage at the joints between the monoliths is probably due to open joints and/or torn waterstops.

RECOMMENDATION

Seal or grout the leaking joints.

Press the F7 key to PRINT this page.
Press the ENTER key to continue.
!
DISPLAY bad conduits info

CONCLUSION

The wet spots around the pipe/conduit on the embankment are probably due to leaks or to a rupture in the pipe/conduit.

RECOMMENDATION

Repair or replace the pipe/conduit.

Press the F7 key to PRINT this page.
Press the ENTER key to continue.
!
DISPLAY bad seals info

CONCLUSION

The wets spots at the construction lifts on the embankment are probably due to the lack of a good seal on the construction joints.

RECOMMENDATION

Seal or grout the leaking joints.

Press the F7 key to PRINT this page.
Press the ENTER key to continue.
!
DISPLAY leaky abutment info 1

CONCLUSION

The wet/soft/quick spots on the abutment are probably caused by the opening of cavities when the infilling materials are eroded. This may be caused by the dissolution of soluable materials or by the presence of open fractures.

RECOMMENDATION

If the flow rates are not excessive, install a downstream filter berm.

Information on this remedial action will be presented on the following screen.

Press the F7 key to PRINT this page.
Press the ENTER key to continue.
!
DISPLAY leaky abutment info 2

RECOMMENDATION

If the flow rates are significant, install a positive cutoff such as, a grout curtain or a concrete cutoff wall.

Information on this remedial action will be presented on the following screen.

Press the F7 key to PRINT this page.
Press the ENTER key to continue.
!
DISPLAY wet lenses info 1

CONCLUSION

The wet/soft/quick spots of limited areal extent on the abutment are probably due to the interlaying of pervious material in the abutment. This is typical of glacial drift and paleo terrace deposits.

RECOMMENDATION

If the flow rates are not excessive, install a trench drain collector system to reduce the water table and drain the area.

Information on this remedial action will be presented on the following screen.
Press the F7 key to PRINT this page.
Press the ENTER key to continue.
!
DISPLAY wet lenses info 2

RECOMMENDATION

If the flow rates are significant, then install a downstream filter berm.

Information on this remedial action will be presented on the following screen.

Press the F7 key to PRINT this page.
Press the ENTER key to continue.
!
DISPLAY high piezometric pressures info 1

CONCLUSION

The wet/soft/quick spots on the foundation are probably caused by excessive piezometric pressures in subsurface formations. (such formations often have an outcrop of pervious material)

RECOMMENDATION

Reduce the piezometric head in the foundation with new or additional relief wells.

Information on this remedial action will be presented on the following screen.

Press the F7 key to PRINT this page.
Press the ENTER key to continue.

!
DISPLAY high piezometric pressures info 2

RECOMMENDATION

If relief wells are insufficient or impractical, install a downstream berm to increase the seepage path and reduce the gradient.

Information on this remedial action will be presented on the following screen.
Press the F7 key to PRINT this page.
Press the ENTER key to continue.
!
DISPLAY leaky foundation info

CONCLUSION

The wet spots or seeps emerging downstream of the toe are probably due to openings, cracks, permeable layers, etc. in the foundation.

RECOMMENDATION

Install a positive cutoff such as, a grout curtain or a slurry trench.

Information on this remedial action will be presented on the following screen.

Press the F7 key to PRINT this page.
Press the ENTER key to continue.
!
DISPLAY Unable to determine cause

CONCLUSION

DAMSEAL has been unable to determine the cause of your wet spots from the information given and its knowledge.

Press the F7 key to PRINT this page.
Press the ENTER key to continue.
!
! TEXT SECTION
!
TEXT Location of wet spots

Where are the clear seepage or wet/soft/quick spots located?

The foundation includes the toe and the general vicinity of the dam, but not the abutments.

Use the UP/DOWN ARROW keys to make a selection and then press ENTER.

!

TEXT Recent precipitation
Has there been recent a rainfall or snowmelt?

!
TEXT Wet spots associated with recent precipitation

Are the wet or soft spots associated with this recent precipitation?

!
TEXT Sudden increase in flow of wet spot

Is there a sudden and rapid increase in flow or in areal extent of the wet spots, which is associated with increases in the pool level?

!
TEXT High piezometric level in embankment

Are there unusually high piezometric levels in the embankment UNRELATED to pool level changes?

!
TEXT Localized wet spots

Are the wet/soft/quick spots localized?

!
TEXT Wet spots are near the abutment

Are there wet/soft/quick spots on the embankment near the abutment/embankment interface?

!
TEXT Wet spots are below groundwater table

Are the seeps or wet/soft/quick spots on the embankment below the level of the groundwater table?

!
TEXT The abutment is fractured rock

Is the abutment of the dam solutioned, soluable, or highly fractured rock?

!
TEXT High piezometric levels in abutment
Are there unusually high piezometric levels in the abutment?

!
TEXT Wet spots are extensive in size

Are there extensive wet/soft/quick spots on the embankment?

!

TEXT Excessive seepage at the wet spots

Is there excessive seepage at the wet spots on the embankment?

!
TEXT There is an upstream facing

Is there an upstream facing (concrete, asphalt, etc.) on the dam?

!
TEXT The dam has a clay core

Does the dam have a clay core?

!
TEXT Leaks associated with structural features

Are the leaks associated with structural features such as construction lifts, joints between monoliths, the embankment-abutment interface, or pipes or conduits which are embedded in the embankment?

!
TEXT Large increase in flow rate with little pool level change

Did the flow rates at the wet spots increase suddenly by a large amount when the pool level rose by a small amount or when the pool level reached a certain elevation?

!
TEXT Leaks at joints between the monoliths

Is there leakage on the embankment at the joints between the monoliths?

!
TEXT There is a pipe or conduit in embankment
Is there a pipe or conduit running through the embankment which is carrying water?

!
TEXT Wet spots located near conduit

Are the wet spots on the embankment located near a pipe or conduit embedded in the embankment?

!
TEXT Wet spots associated with construction lifts

Are the wet spots on the embankment associated with construction lifts?

!
TEXT Wets spots are of limited areal extent

Are the wet/soft/quick spots on the abutment of limited areal extent?

!
TEXT The abutment is soil

Is the abutment of the dam silty/sandy soil?

!
TEXT Abutment soil is pervious

Is any of the soil in the abutment pervious?

!
TEXT Near quick conditons associated with the wet spots

Is there ponded water and/or near quick conditions and/or marshy vegetation associated with the wet spots on the foundation?

!
TEXT Seepage emerging downstream of toe

Is there seepage emerging downstream of the toe?

!
TEXT The foundation is fractured rock

Is the foundation of the dam solutioned, soluable, or highly fractured rock?
!
END

APPENDIX L

FIGURES USED IN DAMSEAL

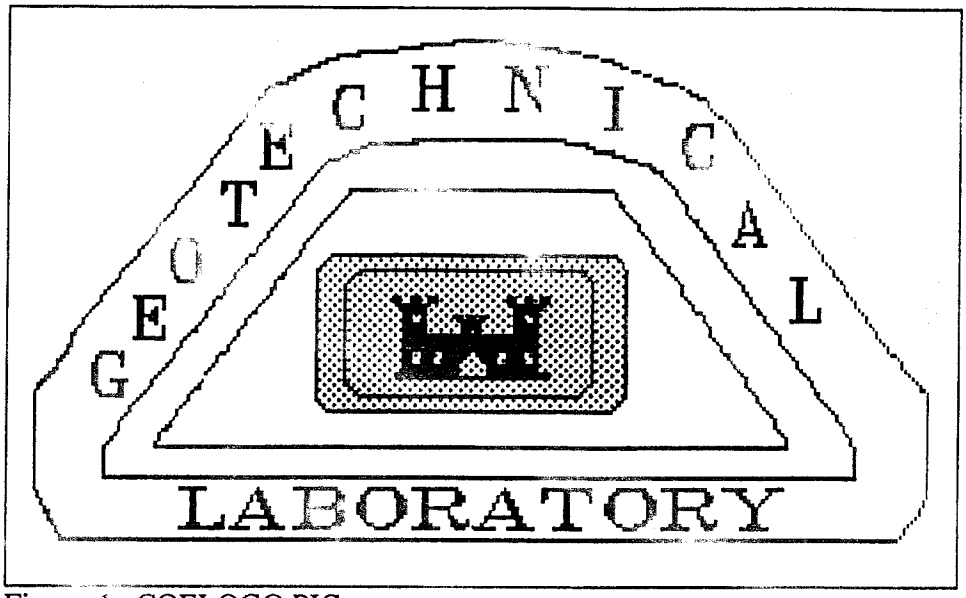

Figure 1 COELOGO.PIC

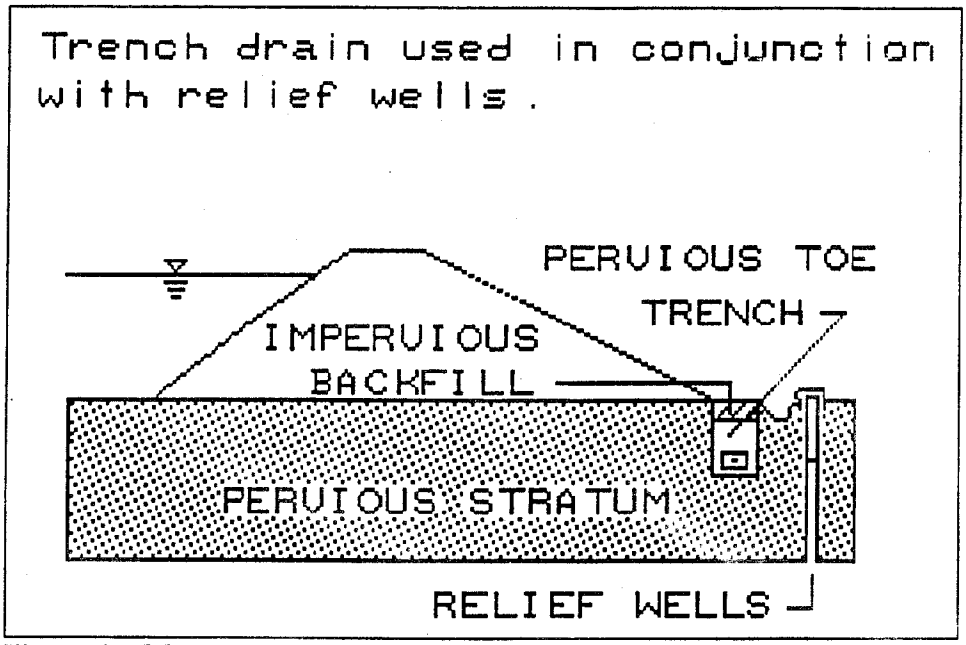

Figure 2 COE4.PIC

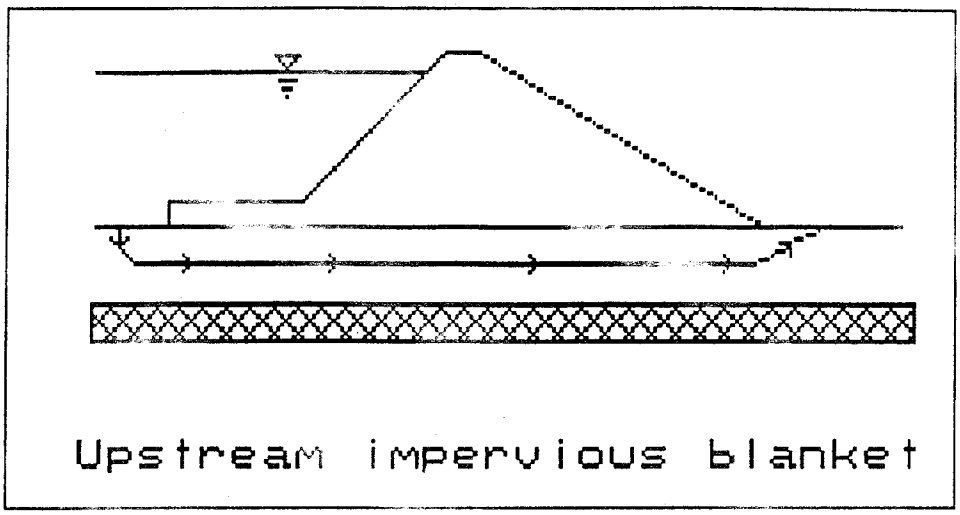

Figure 3 COE5.PIC

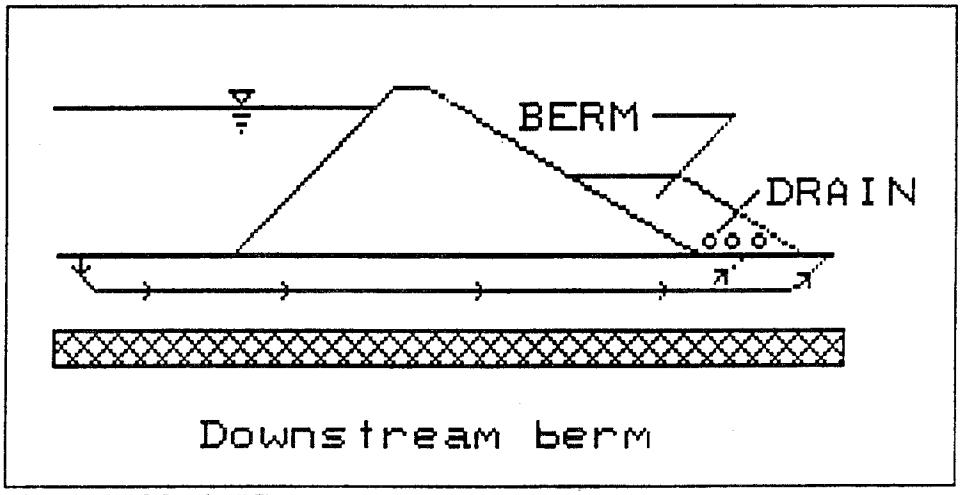

Figure 4 COE6.PIC

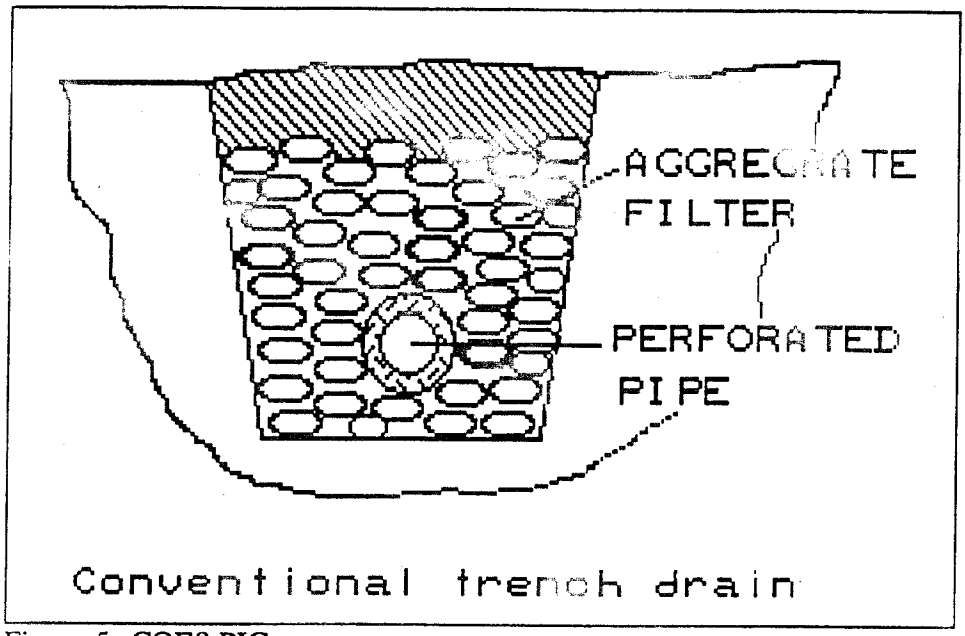

Figure 5 COE8.PIC

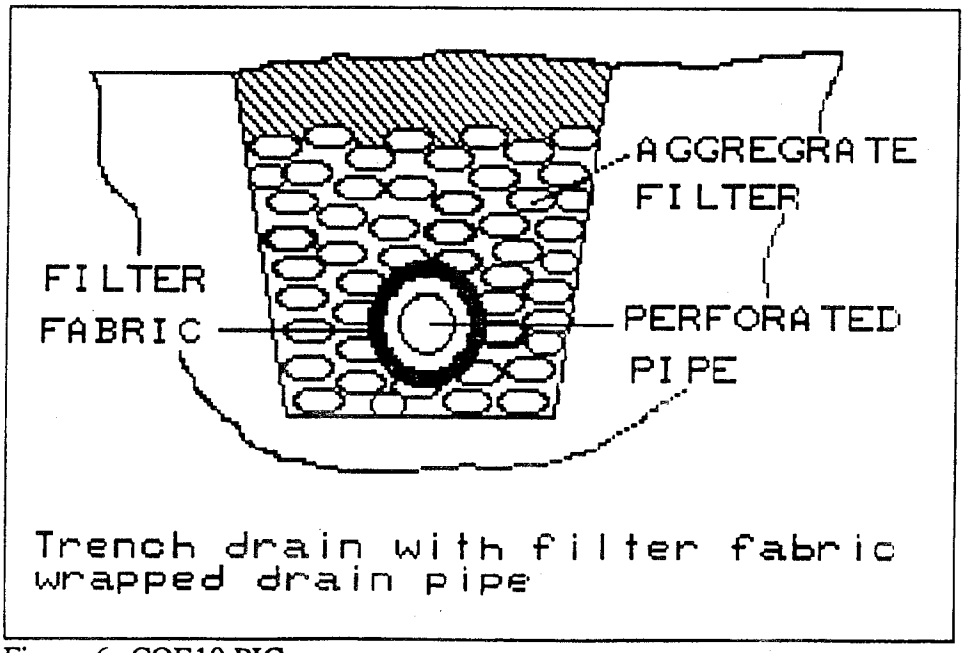

Figure 6 COE10.PIC

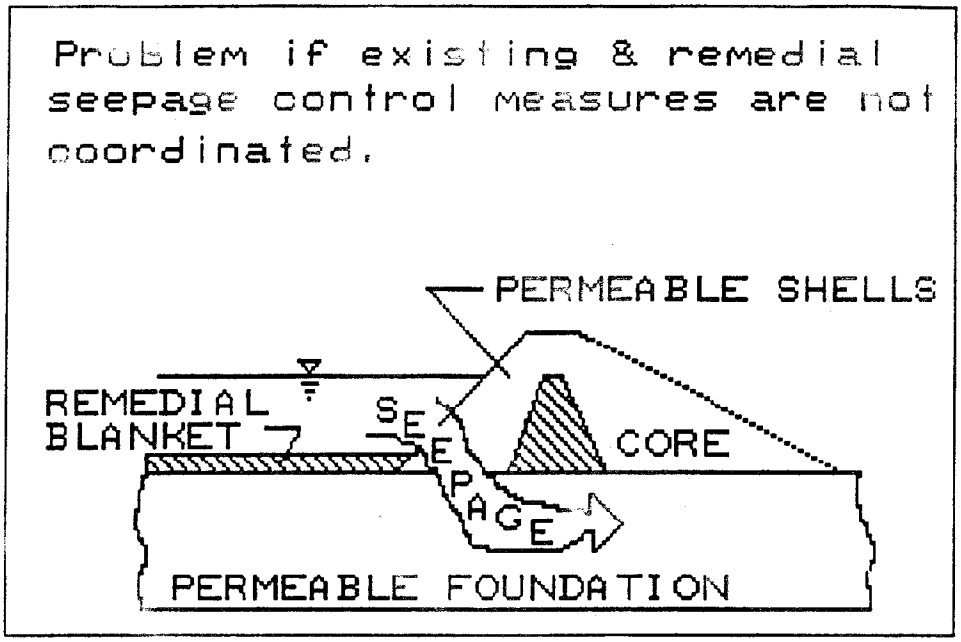

Figure 7 COE12.PIC

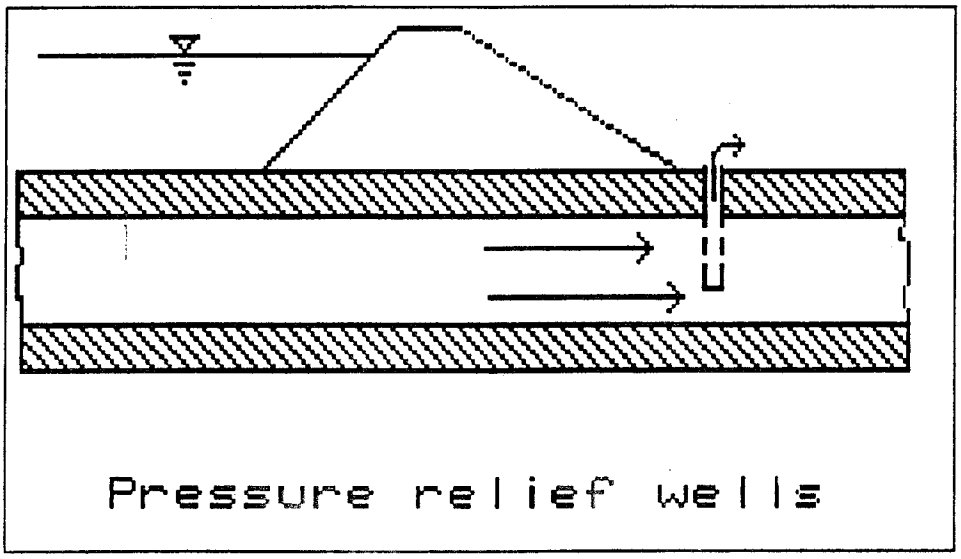

Figure 8 COE13.PIC

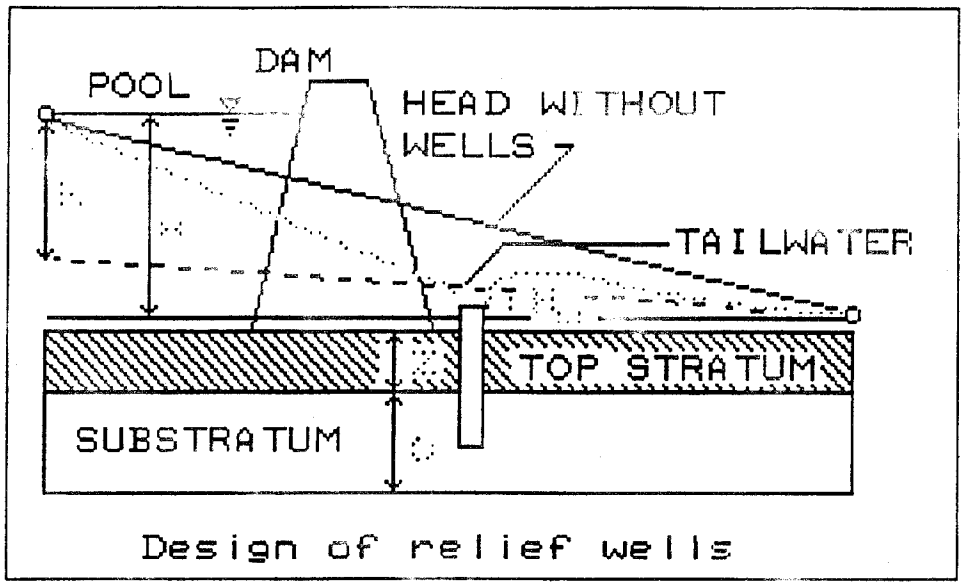

Figure 9 COE14.PIC

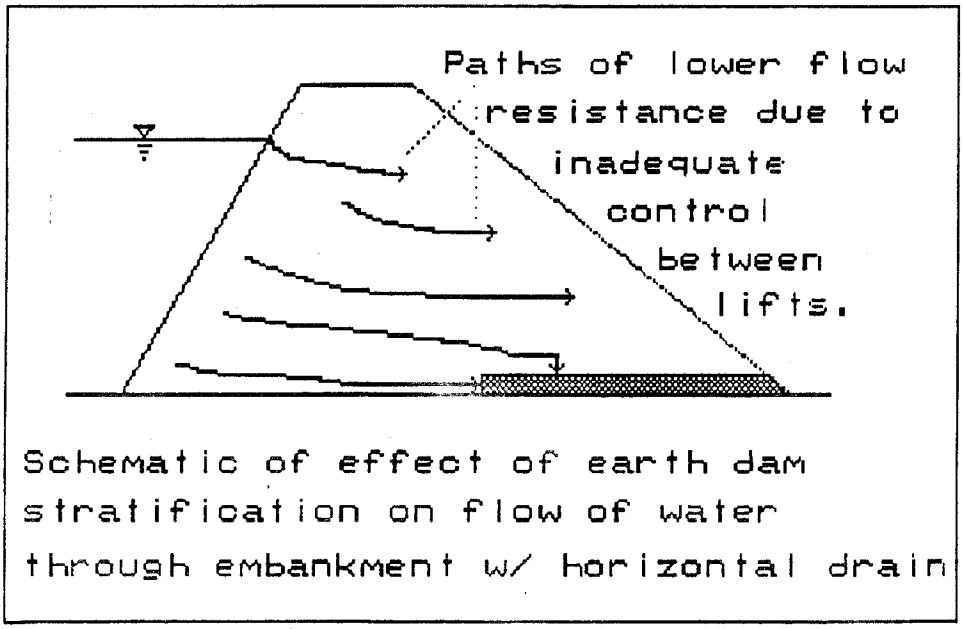

Figure 10 COE16.PIC

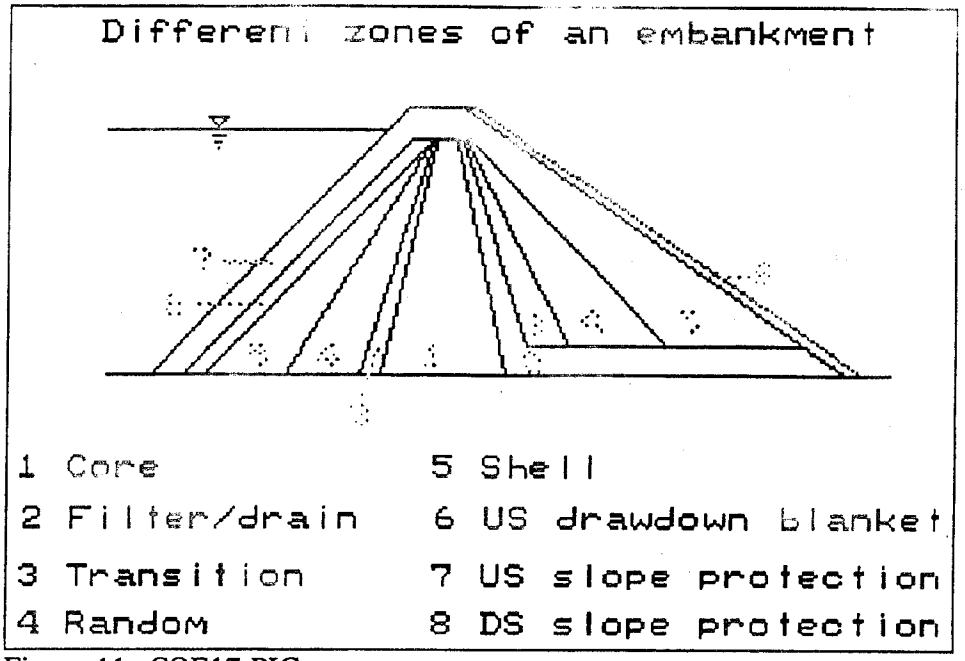

Figure 11 COE17.PIC

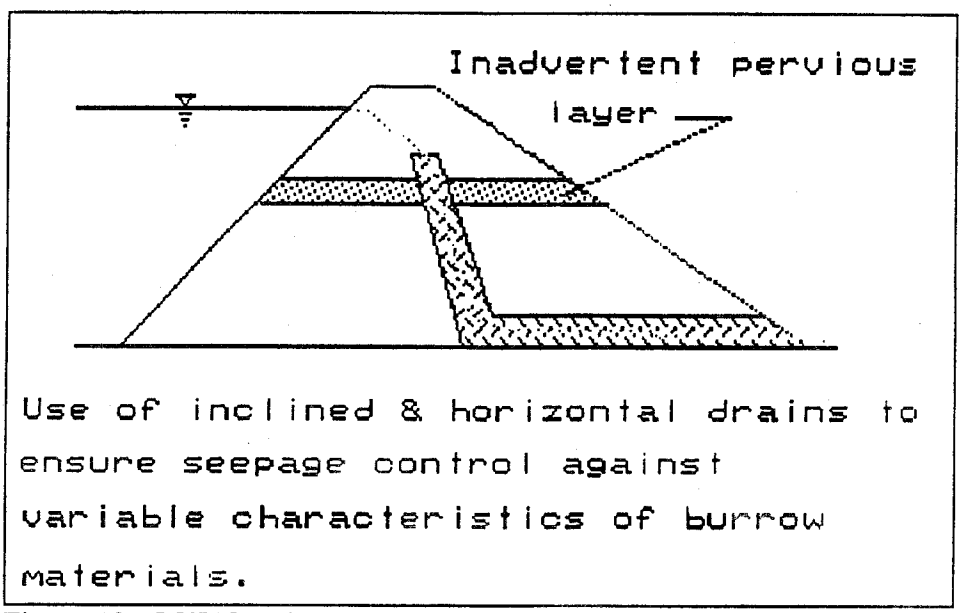

Figure 12 COE18.PIC

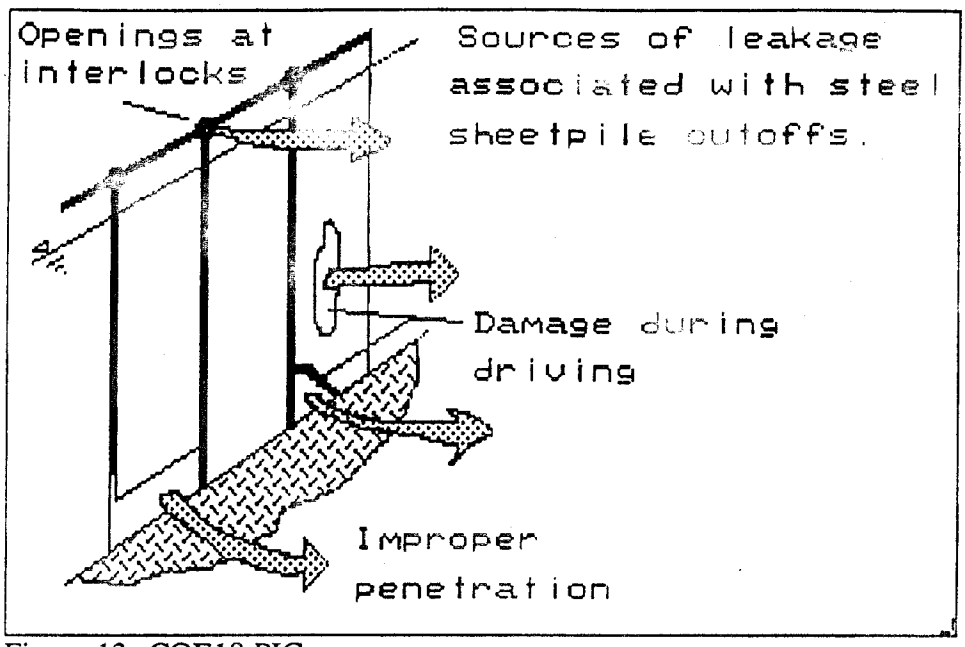

Figure 13 COE19.PIC

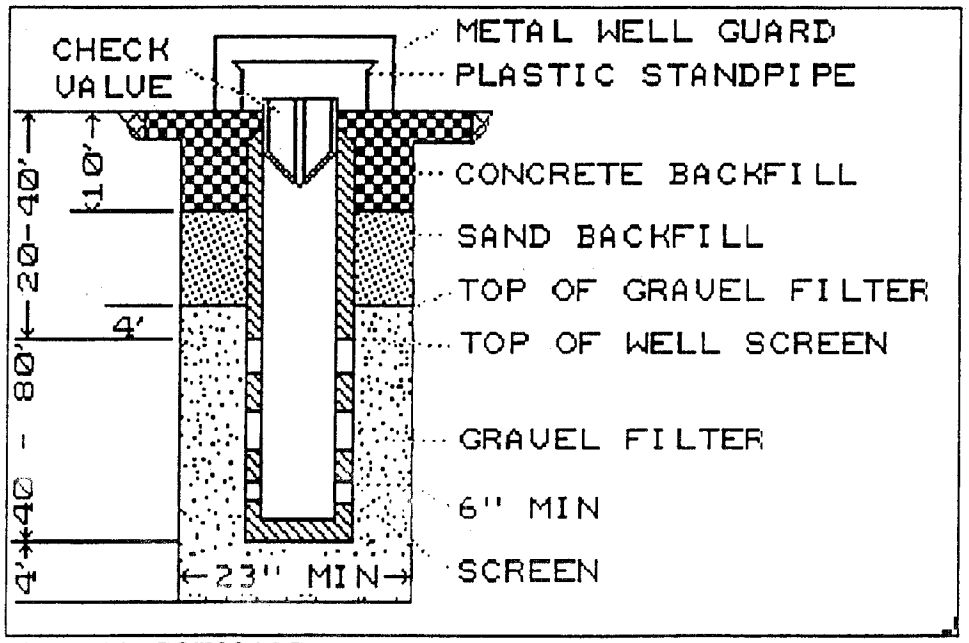

Figure 14 COE20.PIC

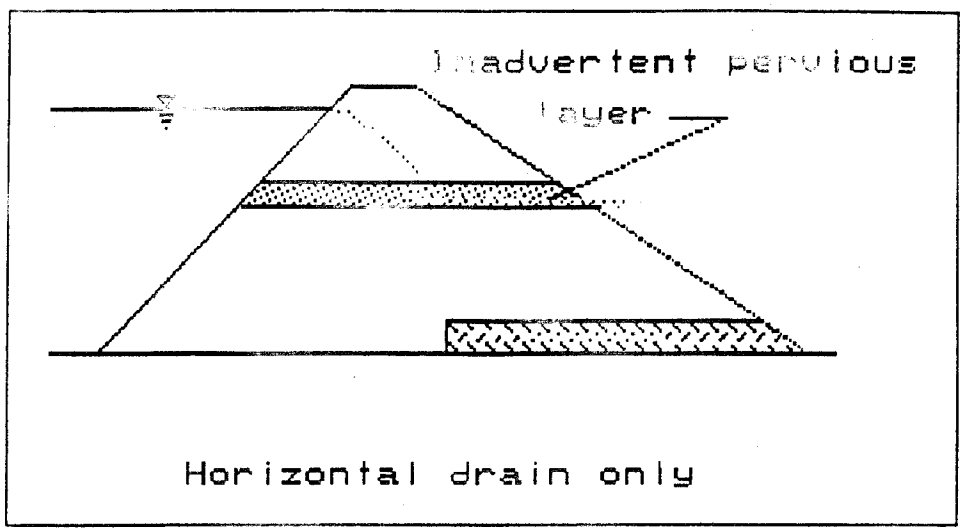

Figure 15 COE21.PIC

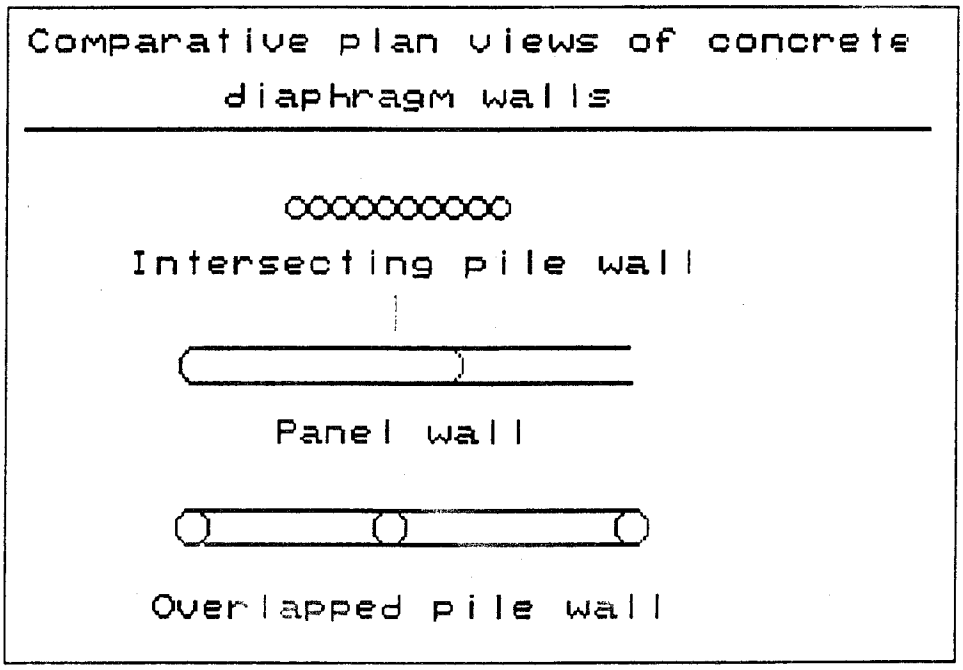

Figure 16 COE23.PIC

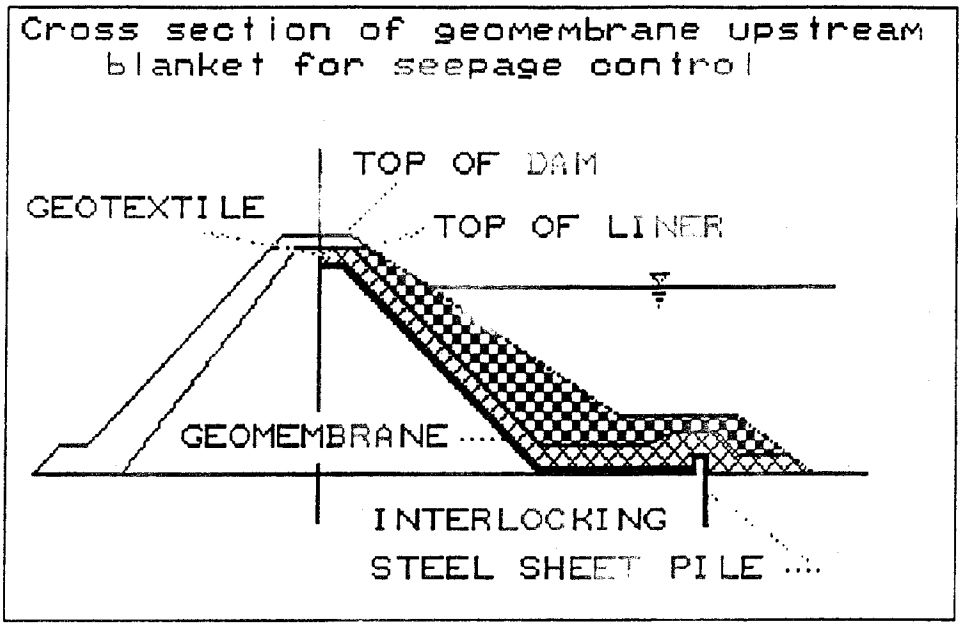

Figure 17 COE24.PIC

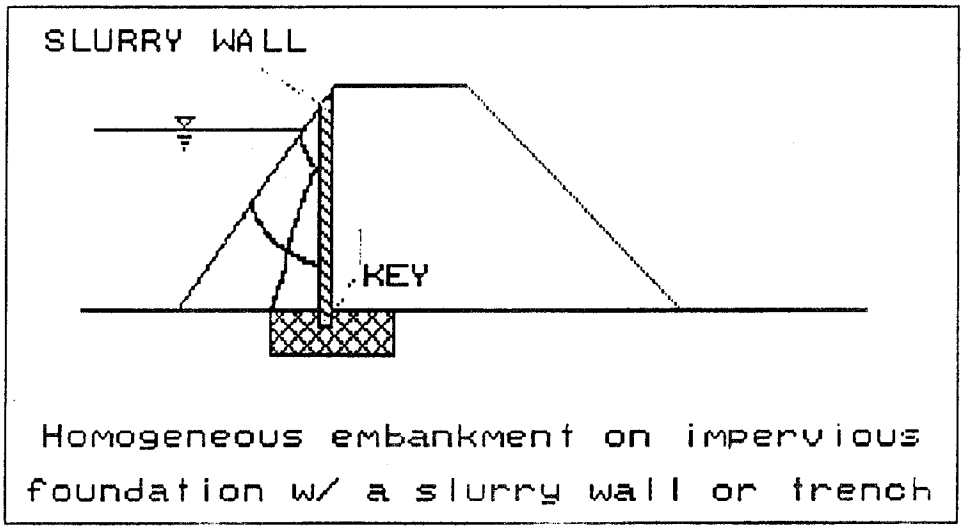

Figure 18 COE25.PIC

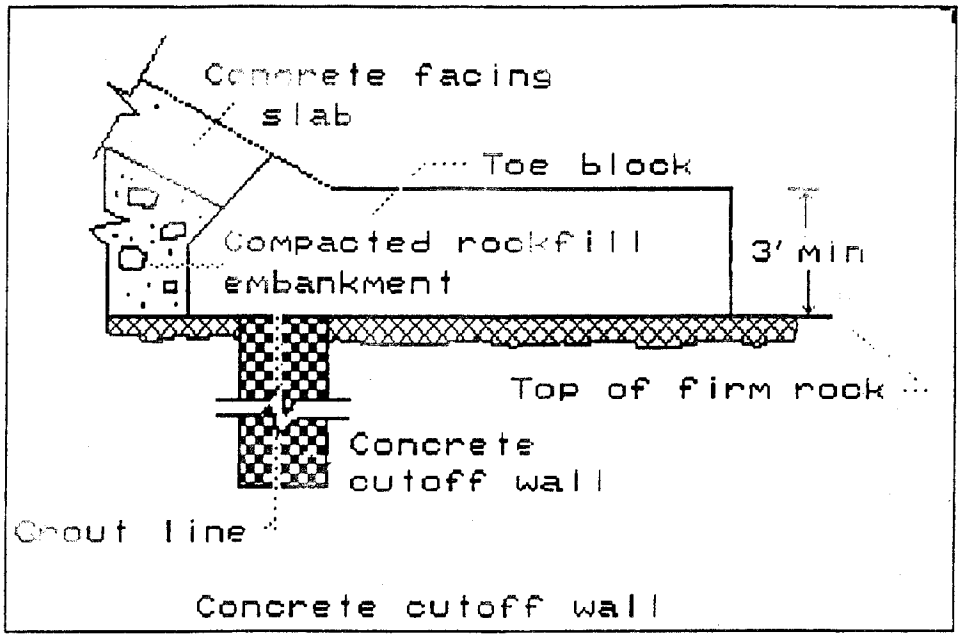

Figure 19 COE26.PIC

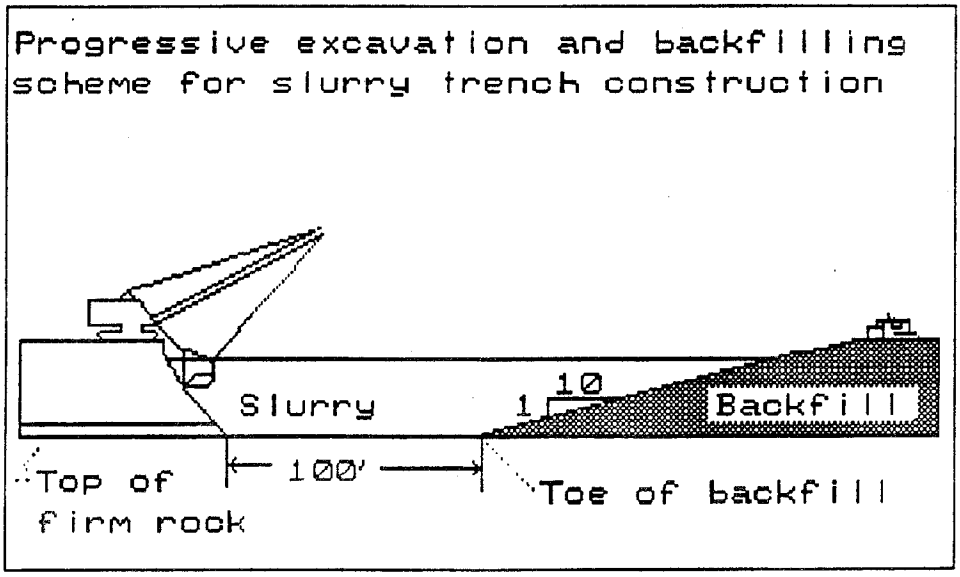

Figure 20 COE27.PIC

Waterways Experiment Station Cataloging-in-Publication Data

King, Roger L.
DAMSEAL : an expert system for evaluating dam seepage / by Roger L. King, Wendell O. Miller ; prepared for Department of the Army, US Army Corps of Engineers ; monitored by Geotechnical Laboratory, US Army Engineer Waterways Experiment Station.
284 p. : ill. ; 28 cm. -- (Technical report ; REMR-GT-19)
1. Dams -- Foundations -- Evaluation -- Data processing. 2. Seepage -- Data processing. 3. DAMSEAL (Computer system) I. Miller, Wendell O. II. United States. Army. Corps of Engineers. III. U.S. Army Engineer Waterways Experiment Station. IV. Repair, Evaluation, Maintenance, and Rehabilitation Research Program. V. Title. VI. Title: DAMSEAL--an expert system for evaluating dam seepage. VII. Series: Technical report (U.S. Army Engineer Waterways Experiment Station) ; REMR-GT-19.
TA7 W34 no.REMR-GT-19