US-CE-C Property of the
United States Government

REPAIR, EVALUATION, MAINTENANCE, AND REHABILITATION RESEARCH PROGRAM

US Army Corps of Engineers

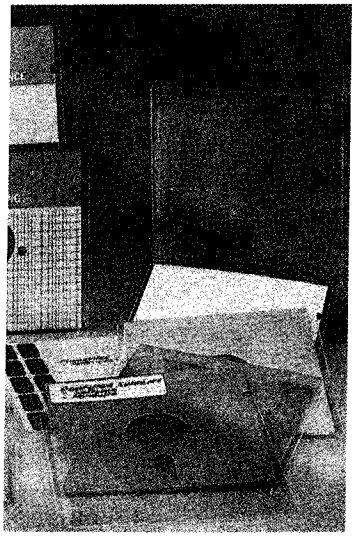

REMR RESEARCH PROGRAM

TECHNICAL REPORT REMR-CS-5

INSTRUMENTATION AUTOMATION FOR CONCRETE STRUCTURES

Report 2
AUTOMATION HARDWARE AND RETROFITTING TECHNIQUES

by

Aubrey Keeter, Byron Stonecypher, Tom Payne
Mathew Skerl, Jim Burton, James Jennings

and

Report 3
AVAILABLE DATA COLLECTION AND REDUCTION SOFTWARE

by

Brian Currier, Marta H. Fenn

Wyle Laboratories
3200 Magruder Blvd.
Hampton, Virginia 23666-1498

Library Branch
Technical Information Center
U.S. Army Engineer Waterways Experiment Station
Vicksburg, Mississippi

US ARMY ENGINEER WATERWAYS EXPERIMENT STATION

June 1987

Reports 2 and 3 of a Series

Approved For Public Release, Distribution Unlimited

Prepared for DEPARTMENT OF THE ARMY
US Army Corps of Engineers
Washington, DC 20314-1000

Under Contract No. DACW39-85-C-0051
(Civil Works Research Work Unit 32309)

Monitored by Structures Laboratory
US Army Engineer Waterways Experiment Station
PO Box 631, Vicksburg, Mississippi 39180-0631

The following two letters used as part of the number designating technical reports of research published under the Repair, Evaluation, Maintenance, and Rehabilitation (REMR) Research Program identify the problem area under which the report was prepared:

	Problem Area		Problem Area
CS	Concrete and Steel Structures	EM	Electrical and Mechanical
GT	Geotechnical	EI	Environmental Impact
HY	Hydraulics	OM	Operations Management
CO	Coastal		

For example, Technical Report REMR-CS-5 is the fifth report published under the Concrete and Steel Structures problem area.

Destroy this report when no longer needed. Do not return it to the originator.

The findings in this report are not to be construed as an official Department of the Army position unless so designated by other authorized documents.

The contents of this report are not to be used for advertising, publication, or promotional purposes. Citation of trade names does not constitute an official endorsement or approval of the use of such commercial products.

COVER PHOTOS:

TOP — Typical cutout at a plumbline location where an automated monitoring system has been installed. The sensor used with the automated system is hidden from view, except for the bottom, since it is installed up in the plumbline well.

BOTTOM — Software for use in data collection and reduction.

16823889

Unclassified

SECURITY CLASSIFICATION OF THIS PAGE

REPORT DOCUMENTATION PAGE

Form Approved
OMB No. 0704-0188
Exp. Date: Jun 30, 1986

1a. REPORT SECURITY CLASSIFICATION Unclassified	1b. RESTRICTIVE MARKINGS
2a. SECURITY CLASSIFICATION AUTHORITY 2b. DECLASSIFICATION/DOWNGRADING SCHEDULE	3. DISTRIBUTION/AVAILABILITY OF REPORT Available for public release; distribution unlimited.
4. PERFORMING ORGANIZATION REPORT NUMBER(S)	5. MONITORING ORGANIZATION REPORT NUMBER(S) Technical Report REMR-CS-5
6a. NAME OF PERFORMING ORGANIZATION Wyle Laboratories 6b. OFFICE SYMBOL (If applicable)	7a. NAME OF MONITORING ORGANIZATION US Army Engineer Waterways Experiment Station Structures Laboratory
6c. ADDRESS (City, State, and ZIP Code) 3200 Magruder Blvd. Hampton, VA 23666-1498	7b. ADDRESS (City, State, and ZIP Code) PO Box 631 Vicksburg, MS 39180-0631
8a. NAME OF FUNDING/SPONSORING ORGANIZATION US Army Corps of Engineers 8b. OFFICE SYMBOL (If applicable)	9. PROCUREMENT INSTRUMENT IDENTIFICATION NUMBER
8c. ADDRESS (City, State, and ZIP Code) 20 Massachusetts Avenue, NW Washington, DC 20314-1000	10. SOURCE OF FUNDING NUMBERS PROGRAM ELEMENT NO. / PROJECT NO. / TASK NO. / WORK UNIT ACCESSION NO.

11. TITLE (Include Security Classification) Instrumentation Automation for Concrete Structures; Report 2, Automation Hardware and Retrofitting Techniques, and Report 3, Available Data Collection and Reduction Software

12. PERSONAL AUTHOR(S) Report 2--Keeter, Aubrey; Stonecypher, Byron; Payne, Tom; Skerl, Mathew; Burton, Jim; Jennings, James; Report 3--Currier, Brian; Fenn, Marta H.

13a. TYPE OF REPORT	13b. TIME COVERED	14. DATE OF REPORT (Year, Month, Day)	15. PAGE COUNT
Reports 2 and 3 of a Series	FROM _____ TO _____	June 1987	Rpt 2--575; Rpt 3--133

16. SUPPLEMENTARY NOTATION A report of the Concrete and Steel Structures problem area of the Repair, Evaluation, Maintenance, and Rehabilitation (REMR) Research Program. Available from National Technical Information Service, 5285 Port Royal Road, Springfield, VA 22161.

17. COSATI CODES			18. SUBJECT TERMS (Continue on reverse if necessary and identify by block number)
FIELD	GROUP	SUB-GROUP	Computer programs (LC) Measuring instruments (LC)
			Concrete construction (LC)
			Hydraulic structures (LC)

19. ABSTRACT (Continue on reverse if necessary and identify by block number)

Report 2 is a guide to commercially available instruments and equipment which can be used to automate measurements of structural behavior and environmental conditions at US Army Corps of Engineers' hydraulic structures. It also presents suggested methods to replace or retrofit existing instruments at Corps structures. Report 1 presented instrumentation automation techniques. Because of the many options which exist in selecting the appropriate hardware, the procedures in Report 1 for determining system requirements should be followed closely. Also, available software listed in Report 3 will influence system selection.

20. DISTRIBUTION/AVAILABILITY OF ABSTRACT ☒ UNCLASSIFIED/UNLIMITED ☐ SAME AS RPT. ☐ DTIC USERS	21. ABSTRACT SECURITY CLASSIFICATION Unclassified	
22a. NAME OF RESPONSIBLE INDIVIDUAL Edward F. O'Neil	22b. TELEPHONE (Include Area Code) (601) 634-3268	22c. OFFICE SYMBOL WESSC-CE

DD FORM 1473, 84 MAR 83 APR edition may be used until exhausted. All other editions are obsolete.

SECURITY CLASSIFICATION OF THIS PAGE

Unclassified

REPAIR, EVALUATION, MAINTENANCE, AND
REHABILITATION RESEARCH PROGRAM

Technical Report REMR-CS-5

INSTRUMENTATION AUTOMATION FOR CONCRETE STRUCTURES

Report 2

AUTOMATION HARDWARE AND RETROFITTING TECHNIQUES

by

Aubrey Keeter, Byron Stonecypher, Tom Payne
Mathew Skerl, Jim Burton, James Jennings

Wyle Laboratories
3200 Magruder Blvd.
Hampton, Virginia 32666-1498

June 1987
Report 2 of a Series

Approved for Public Release; Distribution Unlimited

Prepared for DEPARTMENT OF THE ARMY
US Army Corps of Engineers
Washington, DC 20314-1000

Under Contract No. DACW39-85-C-0051
(Civil Works Research Work Unit 32309)

Monitored by Structures Laboratory
US Army Engineer Waterways Experiment Station
PO Box 631, Vicksburg, Mississippi 39180-0631

PREFACE

This is Report 2 of a series entitled "Instrumentation Automation for Concrete Structures." This report is a guide to commercially available instruments and equipment which can be used to automate measurements of structural behavior and environmental conditions, along with suggested methods to replace or retrofit existing instruments at US Army Corps of Engineers structures. Methods for determining the requirements for and the subsequent design, assembly or fabrication, installation, checkout, operation, and maintenance of data acquisition and data reduction systems for use at or in large concrete structures are described in Report 1 of this series, "Instrumentation Automation Techniques." Available software packages for data acquisition and reduction instruments are described in Report 3, "Available Data Collection and Reduction Software."

The information in this report was compiled by Wyle Laboratories under contract to the US Army Engineer Waterways Experiment Station (WES). A panel of electrical and electronic engineers of Wyle Laboratories' Scientific Services and Systems Group authored the report. The contract was monitored by the Concrete Technology Division (CTD) of the Structures Laboratory (SL), WES. Wyle was assisted by Mr. Edward F. O'Neil, Evaluation and Monitoring Unit, CTD, regarding the various technical aspects in report preparation. Project manager for Wyle Laboratories was Mr. Aubrey C. Keeter.

Publication of the report was funded under Civil Works Research Work Unit 32309, "Improved Instrumentation for Older Structures," for which Mr. O'Neil is principal investigator. This work unit is part of the Concrete and Steel Structures Problem Area of the Repair, Evaluation, Maintenance, and Rehabilitation (REMR) Research Program sponsored by Headquarters, US Army Corps of Engineers (HQUSACE). The Overview Committee of HQUSACE for the REMR Research Program consists of Mr. James E. Crews (Chairman), Mr. Bruce L. McCartney, and Dr. Tony C. Liu. Technical Monitor for this study was Dr. Liu.

The investigation was performed under the general supervision of Mr. Bryant Mather, Chief, SL, and Mr. John M. Scanlon, Chief, CTD, and under the direct supervision of Mr. Henry T. Thornton, Jr., Chief, Evaluation and Monitoring Unit, CTD. Problem Area Leader for Concrete and Steel Structures is Mr. James E. McDonald, CTD. Program Manager for REMR is Mr. William F. McCleese, CTD.

COL Dwayne G. Lee, CE, is Commander and Director of WES. Dr. Robert W. Whalin is Technical Director.

CONTENTS

	Page
PREFACE	i
PART I: INTRODUCTION	I-1-1
PART II: INSTRUMENTATION	II-1-1
General	II-1-1
Alignment	II-2-1
Crack And Joint	II-3-1
Distance Measuring	II-4-1
Extensometers	II-5-1
Humidity	II-6-1
Inclinometers	II-7-1
Leveling	II-8-1
Load And Stress	II-9-1
Pore Pressure	II-10-1
Seepage And Leakage	II-11-1
Seismic	II-12-1
Settlement	II-13-1
Strain	II-14-1
Temperature	II-15-1
Uplift	II-16-1
Water Flow	II-17-1
Water Level	II-18-1
PART III: RETROFIT INSTRUMENTATION	III-1-1
General	III-1-1
Crack And Joint Measuring Devices	III-2-1
Extensometers	III-3-1
Inclinometer	III-4-1
Inverted Plumb Lines	III-5-1
Optical Plummets	III-6-1
Peak-Reading Accelerometers	III-7-1
Plumb Lines	III-8-1
Pore Pressure Instruments	III-9-1
Precise Alignment Instruments	III-10-1
Precise Distance Measuring Instruments	III-11-1
Precise Leveling Instruments	III-12-1
Seepage Measuring Devices	III-13-1
Strain Meters	III-14-1
Stress Meters	III-15-1
Strong Motion Accelerometers	III-16-1
Temperature Measurement Devices	III-17-1
Uplift Cells	III-18-1
Water Level Indicating Devices	III-19-1

CONTENTS (Continued)

Page

PART IV: AUTOMATED DATA PROCESSING EQUIPMENT IV-1-1

General IV-1-1
Central Processing Units IV-2-1
Controllers IV-3-1
Peripheral Memory Devices IV-4-1
Disk Systems IV-5-1
Magnetic Tape Systems IV-6-1
Terminals/Display Units IV-7-1
Data Entry Devices IV-8-1
Graphics IV-9-1
Printers IV-10-1
Plotters IV-11-1
Statistical Multiplexers IV-12-1
Communication Adapters IV-13-1
Data Acquisition Units IV-14-1
Data Loggers IV-15-1
Analog Multiplexers IV-16-1
Signal Conditioners IV-17-1
Hardwire Transmission Devices IV-18-1
Telemetry Transmission Devices IV-19-1
Environmental Enclosures IV-20-1
Power Units IV-21-1
Calibrators IV-22-1

LIST OF FIGURES

No.

1. Automated Plumbline Monitoring System II-2-10
2. Geokon Crackmeter II-3-7
3. GEMS Portable Weir Logger II-11-2
4. DR-200 Recorder System Block Diagram II-12-8
5. Installation of Nold Aquaducer II-13-1
6. Operation of Nold Aquaducer II-13-2
7. Flowmeter, Closed Pipe II-17-1
8. Flowmeter, Open Channel II-17-3
9. Carlson Joint Meter Installation III-2-3
10. Typical Extensometer III-3-2
11. Block Diagram Potentiometer Transmitter III-3-3
12. Custom Built Extensometer III-3-3
13. Four Wire Potentiometer Connection III-3-4
14. Automatic Inclinometer System Components III-4-2
15. Automatic Inclinometer System Block Diagram III-4-2
16. Theodolite Using Recorder/Control Unit III-10-2
17. Theodolite Using Computer Control III-10-3
18. Block Diagram Of Servo Accelerometer III-12-2

CONTENTS (Continued)

19. Vee-Notch Weir III-13-2
20. Carlson Elastic Wire Strain Meter III-14-1
21. Carlson Miniature Strain Meter III-14-2
22. Ailtech Embeddable Strain Gages III-14-3
23. One Active Arm Bridge III-14-3
24. Two Active Arm Bridge III-14-4
25. Vibrating Wire Strain Gages III-14-5
26. Typical Vibrating Wire Cable Connection III-14-5
27. Monfore Standardizing Strain Gage III-14-6
28. Linear Variable Differential Transformer Strain Meter III-14-7
29. Block Diagram Of A Carrier Amplifier Type Signal Conditioner System III-14-8
30. Block Diagram Of A DC Amplifier Type Signal Conditioner System III-14-9
31. Carlson Stress Meter III-15-1
32. WES Pressure Gage III-15-2
33. Gloetzel Pressure Cell III-15-3
34. Bridge Completion Circuit III-17-1
35. 3-Wire Compensation Amplifier III-17-2
36. Pressure Indicator Block Diagram III-19-2
37. Instrumentation System Using The GPIBIIV-1 .... IV-3-12
38. GPIB-PC, IEEE-488 Controller IV-3-15
39. Micom Modem IV-12-4
40. Octapak Configurations IV-14-2
41. Series 53A And 63A Data Acquisition System IV-14-8
42. Quantrol Automated Measurement Control System .. IV-14-37
43. 1010 Configuration Guide IV-14-43
44. REMAC System Installation IV-14-47
45. REMAC System Configuration IV-14-48
46. Wiring Configuration For LVDT Signal Conditioner IV-17-7
47. Typical LVDT Applications IV-17-8
48. Model 474 Configurations IV-22-1
49. Model 477 Configurations IV-22-2

APPENDIX A: ENCLOSURE NEMA RATINGS A-1

APPENDIX B: AUTOMATED MEASUREMENT METHODS FOR CARLSON METERS B-1

APPENDIX C: INSTRUMENT CROSS REFERENCE INDEX C-1

INSTRUMENTATION AUTOMATION FOR CONCRETE STRUCTURES

AUTOMATION HARDWARE AND RETROFITTING TECHNIQUES

PART I: INTRODUCTION

I-1-1. This Report on Automation Hardware and Retrofitting Techniques is a catalog for selecting instrumentation and automatic data processing (ADP) hardware to be used by the Corps of Engineers (COE) to instrument and monitor concrete structures. It may be used in the process of designing and installing automated instrumentation monitoring systems on new structures as well as retrofitting existing instrumentation.

I-1-2. The report is the second of a three-part publication, Instrumentation Automation for Concrete Structures, issued by the U. S. Army Corps of Engineers. The three reports are:

Report 1 -- Technical Report on Automation Techniques

This report provides a guideline for establishing the requirements for automating the data acquisition instrumentation associated with concrete structures. The report generically describes the procedures and methods required to design, install, and maintain fully automated data acquisition and reduction systems. The methods and equipment referenced in this report are described in detail in Report 2.

Report 2 -- Report on Automation Hardware and Retrofitting Techniques

This report provides a description of commercially available sensors, instruments, and ADP equipment that may be selected to fully automate measurements of structural behavior and environmental conditions at Corps of Engineers structures. Methods to retrofit or replace instruments that are already

installed are included in this report. Due to the many options which exist in selecting the appropriate hardware, the procedures in Report 1 for determining system requirements should be closely followed. Also, available software listed in Report 3 will influence system selection.

Report 3 - Report on Available Data Collection and Reduction Software

This report serves as a guide in selecting software for equipment that is described in Report 2 and identifies commercially available software packages that are applicable to data acquisition and reduction instruments which may be used by the Corps of Engineers.

I-1-3. A group of electrical/electronic engineers of Wyle Laboratories' Scientific Services & Systems Group researched many references and contacted numerous vendors/distributors in selecting the contents for Report 2. The vendor's specification sheets were reformatted to a standard format to aid in comparing items.

DISCLAIMER: Wyle Laboratories has not tested the vendor products to verify that they meet specifications described in vendor specification sheets.

Descriptions of instruments or automatic data processing (ADP) systems herein <u>do</u> <u>not</u> imply a recommendation by the Corps of Engineers or Wyle Laboratories as the best instrument or system for the job.

I-1-4. Where possible, reputable vendors were selected with proven products. In some cases, users were contacted and any significant information about the product is included in the comments section for each instrument.

I-1-5. The Report on Automation Hardware and Retrofitting Techniques is divided primarily into four main parts:

a. **PART I: INTRODUCTION:** This section contains general information.

b. **PART II: INSTRUMENTATION:** This section provides a listing of various measured parameters that are used to monitor concrete structures. These parameters are listed in alphabetical order and list the various instruments that might be used to measure each parameter. Each instrument has a specification listing for each manufacturer. In the case of an identical instrument made by several manufacturers, one specification listing with an attached list of manufacturers and prices is included.

c. **PART III: RETROFIT INSTRUMENTATION:** This section deals entirely with upgrading and automating instrumentation that is installed at existing structures. A list of various instruments that are in use on older concrete structures provides a quick cross-reference to the newer instruments that may be used in the automated data processing systems. Most of the retrofit instrumentation is listed in the INSTRUMENTATION part of the report. Rather than repeat the information, a "refer to specification" comment directs the user to the specification listing. Each retrofit instrument has at least one method provided for automating its output. This method is described following the reference to specifications. The description includes the various hardware items which are required to install the instrument and to connect it to the data acquisition system, the required data acquisition system, and all the software available. Some of this information may already be listed in the AUTOMATED DATA PROCESSING part, or the Software Report. If it is, it is also referenced rather than repeated in the retrofit part.

d. **PART IV: AUTOMATED DATA PROCESSING EQUIPMENT:** This section consists of the ADP hardware. The equipment cataloged in this section covers everything required to automate the instrumentation, digitize and process the data obtained from this instrumentation, and display the results in a user-selectable format. The ADP hardware is grouped by the function that it performs in the task of acquiring and processing data. Refer to the Generic report for help in selecting the proper type of ADP hardware for a specific application. Refer to the Software report also to ensure availability of application programs to meet the users' requirements.

I-1-6. To aid in the use of this report, the instrumentation and ADP hardware described in Parts II and IV were entered into an IBM personal computer (PC) data base. This data base may be updated periodically to include new instrumentation and ADP hardware. To obtain the latest revision of this data base, one should contact the Waterways Experiment Station, U. S. Army Corps of Engineers, Vicksburg, Mississippi. The data base may be accessed by any one of three methods: 1) a hard copy of the data base may be printed and shipped to the user; 2) a set of IBM PC floppy disks containing the data base can be shipped to the user; or 3) a telephone link between the Waterways Experiment Station IBM PC and the user's computer can be established to download the data base.

PART II: INSTRUMENTATION

General

II-1-1. This part of the report is a catalog for selecting instrumentation to measure parameters in concrete structures. The instruments are categorized by the parameter that they measure. Example: Strong motion accelerometers are found under Seismic Instrumentation. In some cases, an instrument may be listed under several different parameter measurement areas, if applicable. The parameter measurements are listed in alphabetical order. The manufacturers listed under each parameter measurement are also listed in alphabetical order.

II-1-2. Each instrument has a specification sheet which lists the following data:

a. Type and description of the equipment

b. Model

c. Manufacturer

d. Pricing

e. Operation

f. Prerequisites

g. Input specifications

h. Output specifications

i. Interfacing

j. Power requirements and recommendations

k. Environmental conditions

l. Physical specifications

m. Reliability

n. Application information

o. Comments

II-1-3. All of the specifications should be closely analyzed to ensure compatibility with a user's system. Some instruments require special signal conditioning which might not easily adapt to the user's configuration. Refer to the generic report for aid in answering any technical question which might arise during the selection of an instrument.

Alignment

II-2-1. Type and description: **Electro-optical remote reading device for direct and inverted pendulums (plumblines).** Inclination and displacement measurements with wire pendulums by means of non-contacting, automatic tracking of the pendulum deviations in two-dimensional horizontal direction by an opto-electronic follow-up control system and transformation of the mechanical distances into proportional electrical measuring values for remote transmission.

The follow-up control system consists of a housing, out of which a measuring head protrudes, which can both be moved in longitudinal direction and in transverse direction to the housing axis. Through the center of the measuring head, the float-line of a fluid-damped plumb or of a floating reversible pendulum is guided. On the plumb-line, two plastic cylinder lens are fixed in the corresponding measuring level of the measuring head.

a. Model: Electro-optical pendulum reading device

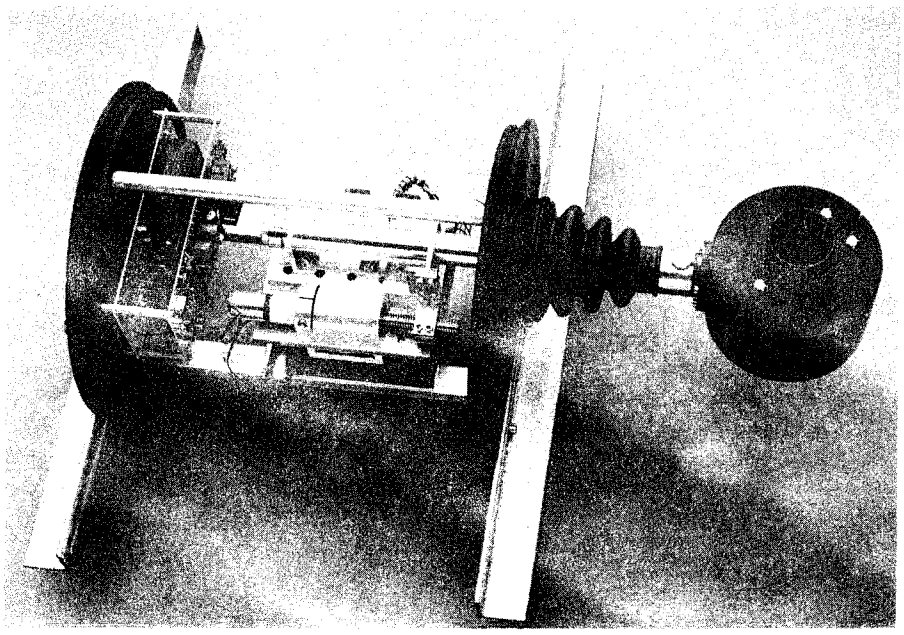

ELECTRO-OPTICAL READING DEVICE (PHOTO COURTESY OF INTERFELS)

b. Manufacturer: Interfels
(Marketed by) Roctest, Inc.
7 Pond Street
Plattsburgh, NY 12901
(Phone) (518) 5[illegible]-0300

c. Pricing: $7,600.00

d. Operation: A light beam penetrates the plastic lens and is projected onto a differential photo element. If the light beam leaves the center of the differential photo element, the installed electronics will provide a control voltage, which will adjust the measuring head of the device until the zero position has been reached again. For this, highly precise ball-guided slides which are driven by servo-motors are installed in the housing of the instrument for each measuring level. As both movement levels, turned against each other by 90 degrees, are connected with each other, the follow-up in the one level provides for the exact focussing on the other level. This results in a precise two-dimensional follow-up control. The distances driven by the slide are now measured in each level against the firmly anchored housing by means of inductive transducers and are thus transformed into electrical measuring values.

Generally, the measuring value is stated as direct current voltage with +/- 0 as center value of the measuring range, and for example +/- 100 mV per mm measuring distance. The reproducible resolution of the instrument is better than +/- 0,02 mm. The readout can be performed by means of a digital multimeter with 3 1/2 digits. However, an X/Y-recorder can also be connected. The remote transmission of the direct current voltage is possible within a certain limit. Alternatively, an equipment output with impressed current (0 - 20 mA) or the voltage frequency transformation is also possible.

e. Prerequisites: A plumbline with a 11-inch or greater diameter plumbline well.

f. Input specifications: Measurement range: ±20mm (in both axes)

g. Output specifications:
Measurement resolution: ±.02 mm
Output voltage: ±100 mV/mm
Will require 2 channels for X and Y outputs.

h. Interfacing: Not applicable.

i. Power requirements and recommendations:
Voltage supply: 200 VAC, 50 Hz, or
110 VAC or
±25 VDC
The ±25 VDC design should be preferred in humid areas.

j. Environmental conditions: The housing is splash-proof by use of O-rings and a bellow for sealing the arm of the measuring head. The electrical connection points are embedded in silicone sealing compound. The photo elements are varnished; the mirrors are chromium-plated metal mirrors or casted back-wall mirrors. By the installation of a small heating resistor, the equipment can also operate with high air humidity. The applied construction components are corrosion resistant.

k. Physical specifications:

Housing diameter:	272 mm
Length of housing:	320 mm
Housing attachment:	The housing is equipped with two cross girders of angular profile.
Distance of measuring head from housing:	Max. 295 mm (255 - 295 mm)
Total equipment length:	Max. 615 mm

l. Reliability: Not available.

m. Application information: A principal field of application for these instruments is the control of barrage walls and retaining dams using reversible pendulums, the suspension points of which are located in boreholes deep under the structure in rock layers that can very probably be considered as invariable relation points.

A measuring device installed in the foundation area of a barrage wall will then indicate a displacement of the wall. If the float-line wire is guided through the barrage wall up to the crest of the wall and the float is mounted there, several measuring points can be arranged at various heights of the wall. It is thus possible to measure the further deformations of the barrage wall, for example because of different overflow level or even because of temperature differences (solar radiation!).

For this both the reversible pendulum and the suspended plumb can be applied, as an inclination

measurement of the structure is performed. These measurements are highly sensitive, as the absolute deviation of the plumb refers to the length of the plumbline. In case of a distance of 50 m between plumb-line suspension and readout unit with a resolution of the measuring device of 0.05 mm, an inclination measurement with a resolution of 1 um/m would result. This early warning can help to avoid damages at buildings.

n. Comments: None.

II-2-2. **Type and description: Theodolite, digital with electronic distance measurer, Pentax model PX-06D.** The Pentax PX-06D digital theodolite is used for making highly precise angular measurements of targets mounted on points of interest. This model also comes with an electronic distance measurer (EDM) which is capable of measuring distances over a mile away within a ±(5 mm +5 PPM) accuracy. Accessories such as tribrachs, targets, prisms, and optical plummets are also available from Pentax. Both the EDM and the theodolite are microprocessor controlled. This allows the theodolite and the EDM to be controlled by a remote control/recorder unit, the Pentax model S50143. This remote control/recorder connects to the digital theodolite through an RS-232-C interface. This unit may be used to control the operation of the theodolite and also to store the data collected from the instrument in the recorder. The data in the recorder may then be played back through the RS-232-C port of a computer and then be processed. The theodolite also has a display and a keyboard on the unit for use without the remote control/recorder unit.

a. Model: Pentax model PX-06D digital theodolite with EDM and Pentax model S50143 recorder

b. Manufacturer: Pentax Corporation
35 Inverness Drive
East Englewood, CO 80112
(Phone) (303) 773-1101

c. Pricing: Theodolite: $8,700.00

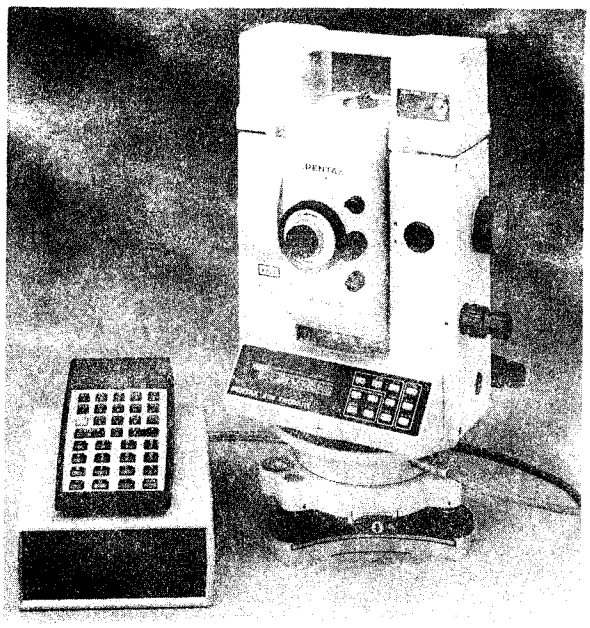

PENTAX EDM THEODOLITE (PHOTO COURTESY OF PENTAX CORPORATION)

d. Operation: The PX-06D digital theodolite has a coaxial telescope that transits a full 360 degrees to aid in fast target sighting. Once the target is sighted, a remote control recorder unit connected to the RS-232-C port of the theodolite is used to initiate a reading. When the reading is complete, the data are stored in the recorder. The user may also enter housekeeping information into the recorder associated with reading such as point identification, time of day, and the date. For the EDM, the user must also enter the temperature and air pressure. These atmospheric conditions are figured into the calculation of the distance. Once all the readings are completed and stored into the recorder, the data can be dumped into the computer along with the housekeeping data via an RS-232-C port on the computer. Pentax has software available to support the entry and the manipulation of this data for IBM personal computers and Hewlett-Packard midrange computers.

e. Prerequisites: Not specified.

f. Input specifications: Not specified.

g. Output specifications:

THEODOLITE TELESCOPE	
Type	Erecting
Magnification	30X
Effective aperture	45mm (EDM 54mm)
Field of view	2.3m at 100m
Minimum focus	1.4m
Resolving power	3"
CIRCLES	
Diameters:	HZ: 78mm V: 78mm
Graduations	360 degrees
Optical micro scale	6" digital
Scale estimation	1"
SENSITIVITY OF LEVELS	
Plate level	30" per 2mm
Circular level on tribrach	8" per 2mm
ELECTRONIC DISTANCE METER	
TYPE	Infrared, microprocessor, self-diagnostic.
MEASURING RANGE	1 prism 1,400 m (4,590 ft) 3 prisms 1,700 m (5,600 ft)
ACCURACY	± (5mm + 5 PPM) m.s.e.
MINIMUM COUNT	FINE mode 1mm/.003 ft TRACKING mode 10mm/.01 ft
MEASURING TIME	FINE mode 5 sec TRACKING mode 1 sec

h. Interfacing: For interfacing to a computer, the data are stored in a recorder unit and then dumped into a computer via an RS-232-C port.

i. Power requirements and recommendations:

ON BOARD BATTERY	8.4V NiCd, 2-hr continuous operation, 1 hr charge time
MEMORY BATTERY	Lithium type five years
BATTERY PACK	8.4V NiCd, 7-hr continuous operation, 15 hr charge time

j. Environmental conditions:
Temperature range: -20 °C to 50 °C

k. Physical specifications:

DIMENSIONS	160 x 192 x 345mm (6.3 x 7.6 x 13.6 in)
WEIGHT	6 kgs (13.2 lbs)

l. Reliability: MTBF is not available.

m. Application information: The Pentax PX-06D digital theodolite is capable of performing the high precision angular measurements needed to monitor the alignment of concrete structures. The data obtained from this instrument is stored by a recorder unit in the field and then is subsequently transferred to a computer from the recorder unit. The PX-06D also has a built-in EDM that can make very precise distance measurements of over a mile. This capability and the angular measurement capability of the theodolite make this instrument excellent for performing triangulation, traversing, and deformation measurements.

n. Comments: Pentax supplies software packages that handle the I/O protocol of the recorder unit and aid in data processing of the data for the IBM personal computers and Hewlett-Packard's midrange computers.

II-2-3. **Type and description: Plumbline monitoring system, automated.** The automated plumbline monitoring system includes up to twelve sensors, repeaters, a system controller, and a printer. The system may operate independently or may be coupled to an external computer via an EIA RS-232-C interface link. Each sensor is actually two complete camera/light source/optics packages to simultaneously measure the plumbline position in two perpendicular axes. The sensor may be mounted so that its axes match the radial and tangential axes of the dam. The coordinate transformation is computed automatically in the controller. The detector output is amplified and transmitted through a repeater, (or repeaters) to the controller. The repeaters serve a dual function: 1) they are used to boost signals to and from the sensors allowing cable runs of thousands of feet between the sensors and the controller; and 2) they allow

branching of the network of sensors so that a long cable run terminated in a repeater may then branch to a sensor and to as many as four additional repeaters. The controller is a microprocessor-based unit that coordinates all functions of the automated system. It communicates with the operator through the built-in CRT display. It has an EIA RS-232-C link that accepts a "measure" command input and outputs data to an external computer. The controller keyboard is used to select system functions. The controller also regulates the operation of the sensors and receivers, and analyzes the image data from the sensors.

a. Model: Automated plumbline monitoring system

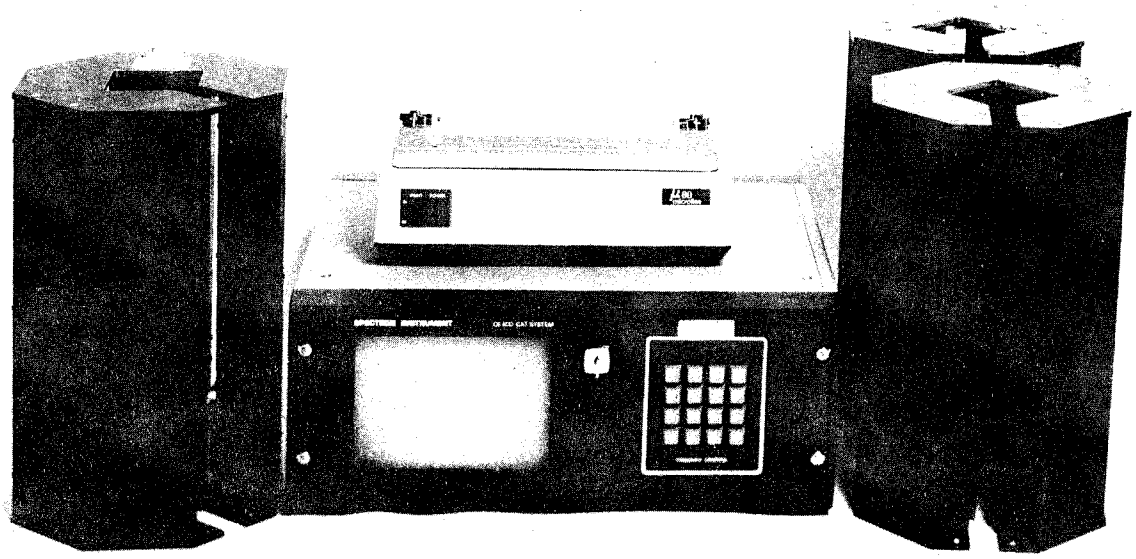

PLUMBLINE SYSTEM (PHOTO COURTESY OF SPECTRON ENGINEERING)

b. Manufacturer: Spectron Engineering
800 West 9th Ave.,
Denver, CO 80204
(Phone) (303) 623-8987

c. Pricing: Sensor: $7800.00
Repeater: $620.00
System with two sensors: $26,900.00

d. Operation: The system displays a series of instructions or a menu to guide the operator. In the operating mode, the system takes measurement readings from each sensor. It then displays the readings on the CRT, and if requested, outputs the data via the RS-232-C port. The measurement may be requested from the data processing computer or the keyboard. The following functions are programmed in the controller:

1. Operating menu

2. Print data display

3. Historical graphics

4. Calibration procedures

5. Live trace

6. Zero 24-hour clock and output

7. Measure plumblines and output

8. Return to normal operation

9. Reset/power off and output

Refer to Figure 1 for a typical configuration.

e. Prerequisites: A plumbline with a 10-in. or greater diameter plumbline well.

f. Input specifications: Measurement range of 3 in. for x and y axes.

g. Output specifications:
Measurement resolution: 0.001 in.
Hardcopy printout of the position measurements.

h. Interfacing: EIA RS-232-C serial interface.

i. Power requirements and recommendations:
Sensor: The sensor receives its power from the repeater box. Unregulated 5VDC and ±15VDC are used.
Repeater: 117VAC; 0.5A
Controller: 117VAC; 2.0A

These units are not particularly noise sensitive and do not require an isolated power line.

j. Environmental conditions:
Sensor and repeater: Insensitive to dust or moisture.
Controller: Requires controlled environment.

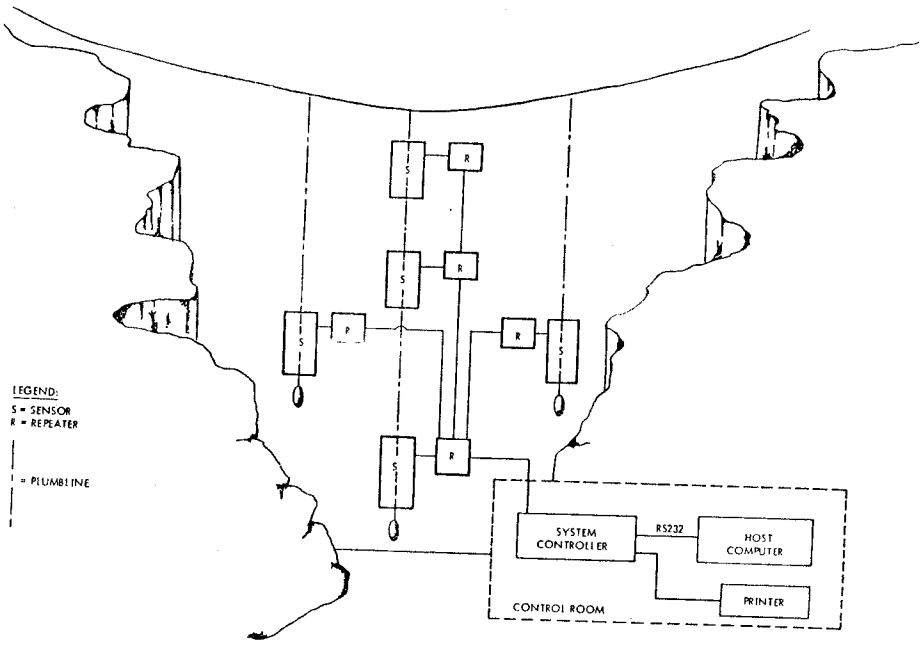

FIGURE 1. AUTOMATED PLUMBLINE MONITORING SYSTEM

k. Physical specifications:
Sensor: 9.5 in. diam x 18 in. high.

l. Reliability: Not available.

m. Application information: The system requires no modification attachments or disassembly to the plumbline system. It will operate on inverted or noninverted plumblines and may be installed on any horizontal surface. The system will operate in conjunction with a manual position reading system.

n. Comments: Each sensor has an individual set of calibration data that are developed at the factory and stored in permanent memory in the controller.

II-2-4. **Type and description: Theodolite, electronic,** capable of making high precision angular measurements. This model also has the capability of making high precision electronic distance measurements (EDM). One of five different interfaces may be attached to it to give it the distance measuring capability. These interfaces vary in performance in regard to the range and precision of the measurement. This instrument may be used to perform control surveys, triangulation, transversing and deformation measurements, detail surveys, and topographical surveys. Other accessories may be fitted to the unit such as optional eyepieces, filters, an eyepiece prism, and more. Wild also makes related equipment designed to work along side this model such as tribrachs, targets, reflectors, target lamps, subtense bars, optical plummets, and equipment for deformation measurements. The accessories make this model useful in a wide range of applications and situations. The unit is microprocessor controlled which allows it to perform measurements which save the user time and reduce the risk of computational error of the raw measurement. The microprocessor allows the unit to perform the most used functions with a single keystroke, and it converts the raw measurement into any of the standard measurement units selected by the user. The user may also select the desired precision of the Y measurement. The unit requires no user initialization, and measurements may be taken immediately after the unit is turned on. The microprocessor also allows the unit to be computer controlled by an EIA RS-232-C interface. The unit is housed in a solidly made one-piece housing with a waterproof keyboard. The keyboard and displays may be illuminated for work in the dark. The instrument has an automatic switch-off feature that allows it to save battery power when not in active use. The instrument contains a nonvolatile data memory which protects data from loss during automatic switch-off.

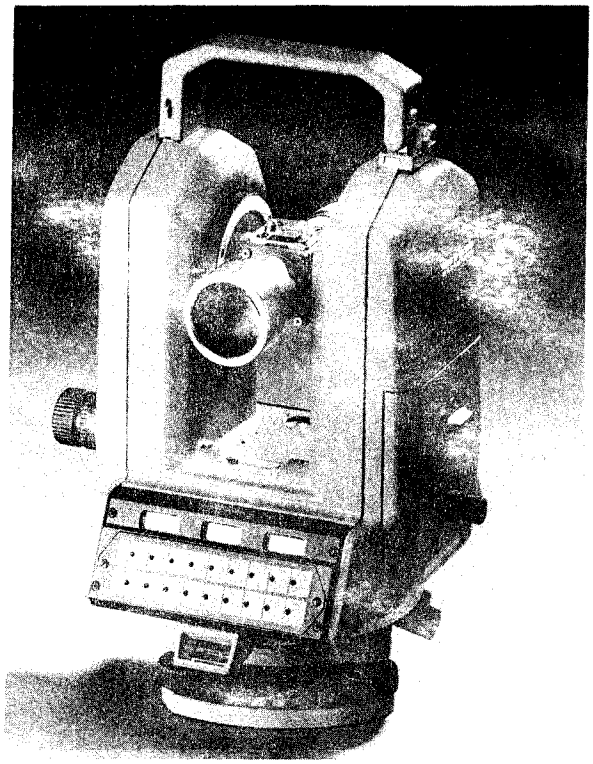

THEODOLITE, MODEL T2000 (PHOTO COURTESY OF WILD HEERBRUGG)

a. Model: T2000

b. Manufacturer: Wild Heerbrugg Instruments, Inc.
P.O. Box Drawer P
Farmingdale, NY 11735
(Phone) (800) 645-9190

c. Pricing: $14,995.00

d. Operation: The absolute angle of measurement is provided by a dynamic system using an opto-electronic scanning technique. With good targets, the standard deviation of the mean of a face left and a face right observation is better than 0.5" (0.15 mgon) for both the horizontal and vertical circles. The T2000 can be operated in one of two modes: 1) the SINGLE mode is used for angle measurements of the highest accuracy; and 2) the TRACKING mode provides continuous angle measurement with displays updated as the unit is turned. The TRACKING mode is used for setting a bearing or following a moving target. Another feature of the unit is that the microprocessor instantly converts the measurement for display in any unit: 400 gon, 360-degree sexagesimal, 360-degree decimal, 6400 mil, m or ft. The T2000 also has a circular and a plate level. For perfect angle measurements with steep lines of sight, the instrument may be levelled exactly,

and may be operated either by computer control or by a waterproof keyboard that comes with the unit. To facilitate computer control, interface parameters of the unit may be set to match those of the computer or an EIA RS-232-C interface. Manual operation uses a central panel comprising a waterproof keyboard and three liquid-crystal displays. One display guides the operator; the other two contain data. The displays and the telescope reticle may be illuminated. Main operations such as measuring and recording angles, distances, heights, and coordinates may be accomplished by a single keystroke. All data are retained in a nonvolatile memory until overwritten by new values.

e. Prerequisites: None.

f. Input specifications: Not applicable.

g. Output specifications: Not applicable.

h. Interfacing: EIA RS-232-C.

i. Power requirements and recommendations:

Power supply:	12 VDC
Plug-in battery GEB68	NiCd, 2Ah, plugs into standard
Charging unit GKL12	For GEB68 plug-in battery
(External battery)	(Any 12V external battery, e.g., batteries for Wild Distomats)

Note: The battery charge is good for approximately 1500 angle measurements and 500 angle and distance measurements.

j. Environmental conditions: Temperatures -

Operating: -20 °C to 50 °C

Storage: -40 °C to 70 °C

Unit is designed for all-weather operation.

k. Physical specifications: Weight -

Unit w/o battery w/o tribrach	8.9 kg (19.5 lb)
Plug-in battery GEB68	0.8 kg (1.8 lb)

Tribrach GDF21	0.8 kg (1.8 lb)
Container	5.5 kg (12.1 lb)

l. Reliability: Mean time before failure (MTBF) is not available, but the manufacturer warrants the T2000 and every EDM module for two years.

m. Application information: The alignment of structures using the theodolite requires a precision theodolite capable of at least 30 times magnification. The T2000 satisfies this requirement and also is capable of instantaneously transferring the measured data into a computer for real-time processing, or to be saved for subsequent data reduction. The unit may be fitted with modules that enable it to perform EDM of varying accuracy and range. This feature, with the angle measuring capability of the theodolite, makes this instrument excellent for performing triangulation, traversing, and deformation measurements.

n. Comments: Wild can supply a complete system using mostly Hewlett-Packard computer equipment and software to support the T2000. However, the RS-232-C interface allows the T2000 to be operated with any computer with an EIA RS-232-C port. Wild manufactures interfaces known as Distomats that fit the telescope of the unit and provide an electronic distance measurement capability. The Distomats vary in range and standard deviation as shown below:

MODEL	RANGE	STANDARD DEVIATION
DI 1000	500 m	5 mm + 5 ppm
DI 4	2 km	5 mm + 5 ppm
DI 4L	5 km	5 mm + 5 ppm
DI 5	5 km	3 mm + 2 ppm
DI 20	14 km	3 mm + 1 ppm

The structure of the data output to the computer is in block form. There are two types of blocks: 1) measurement, and 2) code. A measurement block contains a user-assigned point number for identification of the measurement and the measured data. It may or may not contain other coded information. A code block contains only user-specified codes used as identification codes, data processing codes, or other information.

Crack and Joint

II-3-1. Type and description: **Carlson Joint Meters and Foundation Meters.** The Carlson elastic wire joint meter is simply a long-range strain meter. It is so named because it is used most often for measuring the opening or closing of joints within a structure. Detailed specifications follow below:

a. Model: J and F series (Carlson Instrument Co.). Model JM, JL, and JS series (Terrametrics).

b. Manufacturers: Carlson Instruments
1190-C Dell Avenue
Campbell, CA 95008
Phone: (408) 374-8959

Slope Indicator Co.
3668 Albion Place N.
Seattle, WA 98013
Phone: (206) 633-3073

c. Pricing: All models are $185.00 (Carlson Instruments)

All models are $227.00 (Terrametrics)

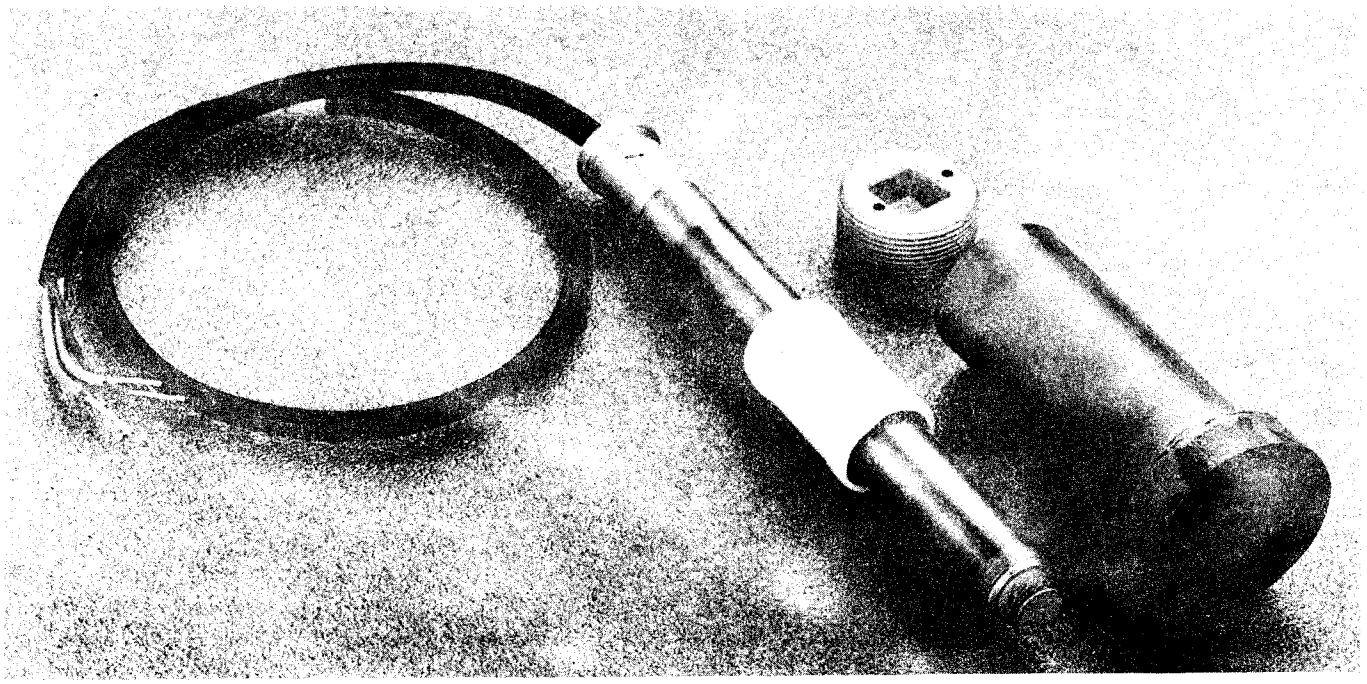

JOINT METER (PHOTO COURTESY OF SLOPE INDICATOR CO.)

d. Operation: The dimensions and principle of operation for the joint and foundation meters are similar to those of the strain meter, except the joint and foundation meters have a greater range. This is accomplished by having a coil spring in series with each of two loops of electric wire. A bellows near the center of the length permits movement to be transmitted to the interior elastic wires. The bellows has a bursting pressure of 400 psi, but should normally not be exposed to more than 100 psi hydraulic pressure. These meters measure stress by using the two elastic coils. They vary the resistance with stress and temperature. The ratio of the resistance yields a measure of stress while the sum of the resistances yields a measure of temperature. The meter is supplied with 30 inches of 16 AWG cable for splicing to another cable.

e. Prerequisites: None.

f. Input specifications: Not applicable.

g. Output specifications:

	JOINT METERS (Carlson)	JO.1	JO.25	JO.5
	(Terrametrics)	JS-10	JM-10	JL-10-1
1.	Range-contraction (in.)	.02	.01	.1
2.	Range-expansion (in.)	.08	.24	.4
3.	Resolution (in.)	.0002	.0005	.001
4.	Resolution (^{o}F)	.1	.1	.1
	FOUNDATION METERS			
	(Carlson)	FO.1	FO.25	FO.5
	(Terrametrics)	- -	- -	JL-1
5.	Range-contraction (in.)	.08	.24	.4
6.	Range-expansion (in.)	.02	.01	.1
7.	Resolution (in.)	.0002	.0005	.001
8.	Resolution (^{o}F)	.1	.1	.1

h. Interfacing: Joint meters and foundation meters may be monitored by any data acquisition system that can measure resistances, or bridge completion signal conditioners. The system should also be capable of numerically calculating the ratio and the sum of the resistances measured and convert these quantities into an engineering form, i.e., degrees or microstrain. The following systems are capable of making measurements from Carlson meters:

Netpac Acurex, para. IV-14-2
Colorado Data Systems, para. IV-14-3
Hewlett-Packard 6108XAA, para. IV-14-5
Hewlett-Packard 3421A, para. IV-14-6
Neff 470, para. IV-14-9
Solartron 3595, para. IV-14-10
Quantrol, para. IV-14-11
Terra Computer, para. IV-14-13
Autodata Acurex, para. IV-15-1
Terratrac, para. IV-15-3
Fluke 2280B, para. IV-15-4

i. Power requirements and recommendations: None.

j. Environmental conditions: None specified.

k. Physical specifications: All models:

1. Coil resistance (ohms) 64

2. Weight (lb) 1.2

l. Reliability: Not available.

m. Application information: Embeddable instruments that may be used to measure deformation and temperature changes in concrete structures. The joint meter is used to measure the opening of joints with a range geared for expansion. The foundation meter's range is mainly for contraction. It may be automated by a data acquisition system that is capable of measuring resistances, or provide bridge completion signal conditioning to measure voltage changes generated by a change in resistance. Data sheets with calibration coefficients for each gage are supplied by the manufacturer for use in the calibration of application software.

n. Comments: None.

II-3-2. **Type and description: Joint meter, vibrating wire.** This embedment joint meter is designed to measure movement across construction joints in concrete. It consists of a socket that is embedded in the first lift and a measuring device which is screwed into the socket after embedding the gage into the structure. This model uses the vibrating wire principle which employs changes in an electrical frequency to reflect changes in movement of the concrete. This frequency signal may be transmitted thousands of feet without loss of accuracy caused by cable resistances or imperfections.

a. Model: 4400 (Geokon)

b. Manufacturer: Geokon, Inc.
7 Central Ave.,
West Lebanon, NH 03784
(Phone) (603) 298-5064

c. Pricing: $350.00

d. Operation: Movement detected by this instrument is measured using the vibrating wire principle. A length of steel wire is tensioned between two end blocks that are embedded directly in the concrete with the joint in between them. Movement of the concrete causes the two end blocks to move relative to one another, thus altering the tension in the steel wire. The tension is measured by plucking the wire and measuring its resonant frequency of vibration using an electromagnetic coil. The change in frequency is related to the movement of the concrete and can be read by data acquisition units equipped to handle vibrating wire devices. The joint meter also has a thermistor incorporated into it for measuring temperatures.

e. Prerequisites: None.

f. Input specifications: Not applicable.

g. Output specifications:

Range (in.)	2 or 4
Sensitivity (in.)	.001
Accuracy	.1% (percent of reading)

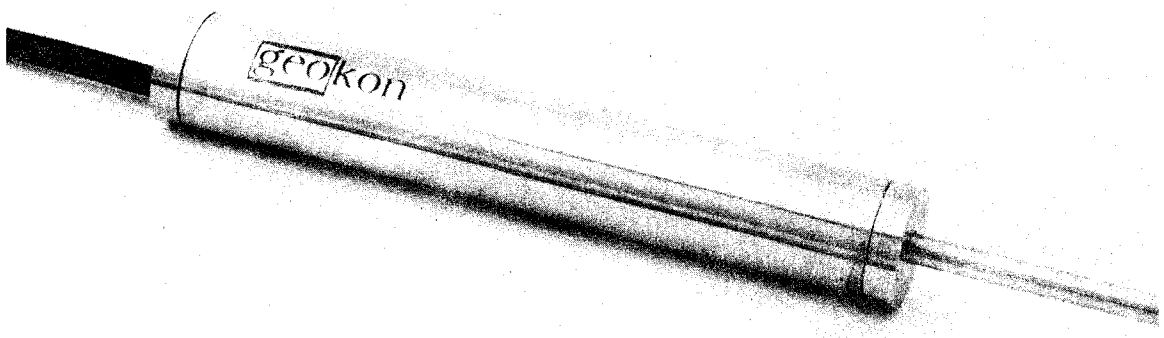

JOINT METER, VIBRATING WIRE (PHOTO COURTESY OF GEOKON, INC.)

h. *Interfacing*: The model 4400 may be operated and monitored automatically by any data logger equipped to handle vibrating wire type gages. The following systems are capable of making measurements from vibrating wire gages:

Netpac Acurex, para. IV-14-2
Telemac CNF-7, para. IV-14-12
Terratrac, para. IV-15-3

i. Power requirements and recommendations: Vibrating wire meters must be plucked by an electromagnetic coil that must be excited by the data system.

j. Environmental conditions: Operating temperatures from -30 to 65 °C.

k. Physical specifications: Dimensions: 1.625 in. x 13 in.

l. Reliability: Not available.

m. Application information: This model can automatically and accurately measure movement across a joint while embedded in the concrete. It may be located thousands of feet away from the automatic data system with only one cable connected to it. Data sheets with calibration coefficients for each gage are supplied by

the manufacturer for use in calibration of application software.

n. Comments: None.

II-3-3. Type and description: **Crack meter, vibrating wire.** This model is designed to measure movement across existing cracks in a concrete structure. The crack meter is installed by drilling two holes on either side of the crack and grouting the legs of the crack meter into these holes. The crack meter is connected to the legs by means of ball joints. The crack meter uses the vibrating wire principle which employs changes in an electrical frequency to reflect changes in movement across the crack. Geokon and several other manufacturers make data loggers that can remotely and automatically monitor vibrating wire devices.

a. Model: 4410 (Geokon)

b. Manufacturer: Geokon, Inc.
7 Central Ave.,
West Lebanon, NH 03784
(Phone) (603) 298-5064

c. Pricing: $350.00, cable $0.35 / ft

d. Operation: Movement detected by this instrument is measured using the vibrating wire principle. A length of steel wire is tensioned between two end blocks that are attached to legs that are embedded in the concrete with the crack in between them. Movement of the concrete causes the two end blocks to move relative to one another, thus altering the tension in the steel wire. The tension is measured by plucking the wire and measuring its resonant frequency of vibration using an electromagnetic coil. The change in frequency is related to the movement of the concrete and may be read by data acquisition units equipped to handle vibrating wire devices.

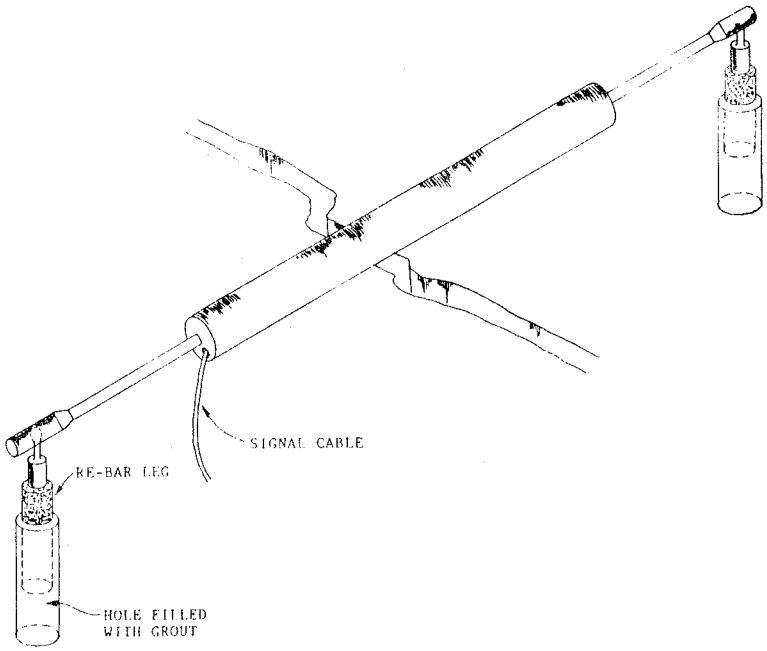

FIGURE 2. GEOKON CRACKMETER

e. Prerequisites: None.

f. Input specifications: Not applicable.

g. Output specifications:

Range (in.)	2 or 4
Sensitivity (in.)	.001
Accuracy	.1% (percent of reading)

h. Interfacing: This model may be operated and monitored automatically by any data logger equipped to handle vibrating wire type gages. The following systems are capable of making measurements from vibrating wire gages:

Netpac Acurex, para. IV-14-2
Telemac CNF-7, para. IV-14-12
Terratrac, para. IV-15-3

i. Power requirements and recommendations: Vibrating wire must be plucked by an electromagnetic coil that must be excited by the automatic data system.

j. Environmental conditions: Operating temperature range is from -30 to 65 ^{o}C.

k. Physical specifications: Dimensions: 1.25 in. x 8 in. Distance between anchor points is specified when ordered.

l. Reliability: Not available.

m. Application information: The model 4410 vibrating wire crack meter can automatically and accurately measure across a crack in concrete and may be located thousands of feet away from the automatic data system with only one cable connected to it. Data sheets with calibration coefficients for each gage are supplied by the manufacturer for use in the calibration of application software.

n. Comments: None.

Distance Measuring

II-4-1. **Type and Description:** **Profile measurement instrument.** Uses a theodolite with an EL distance measuring device and target reflector.

a. Model: A.MT. PROFIL 84

b. Manufacturer: Amberg Measuring Techniques, Ltd.
Switzerland
(marketed by)
Roctest, Inc.
7 Pond Street
Plattsburgh, NY 12901
(Phone) (518) 561-3300

c. Pricing: $24,000.00 includes instrument with tripod, remote control counter and interface, Epson HX20 hand-held computer with software, target and sight on turntable, battery, and support case.

d. Operation: The measuring principle of the A.MT.PROFIL 84 is based on an optical-electronic system using the triangular function with a fixed base, a measured angle and a tube rotating around its own axis. At each increment of rotation, the radial distance between instrument axis and tunnel wall is determined, and in this way the whole profile can be obtained step by step and registered on a magnetic tape. Such a profile measurement lasts 1-2 min. Profile measurements may be carried out in any plane desired. Evaluation is done on a small, hand-held computer or on a desk computer.

e. Prerequisites: Not applicable.

f. Input specifications: Not applicable.

g. Output specifications: Accuracy ±2 promils of measuring distance from 1.2 - 10 m. Maximum distance is not specified, but accuracy improves as range increases.

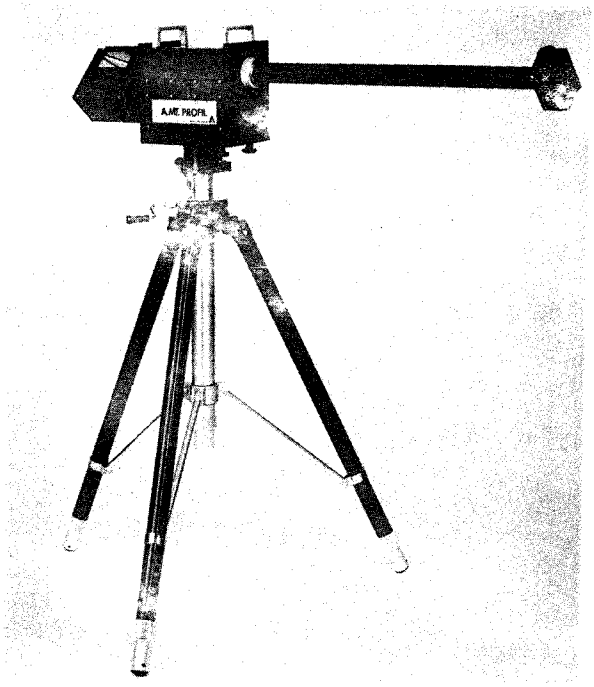

A.MT PROFIL 84 (PHOTO COURTESY OF AMBERG MEASURING TECHNIQUES)

h. Interfacing: Via Epson microcomputer (option).

i. Power requirements and recommendations: Not specified.

j. Environmental conditions: Not specified.

k. Physical specifications: Not specified.

l. Reliability: Not specified.

m. Application information: For the measurement of all kinds of profiles in underground works.

n. Comments: The Epson computer may be connected to the IBM PC or Tektronix or other personal computers (depending on interface port). A similar system is manufactured by Wild Heerbrugg Instruments.

II-4-2. Type and description: Theodolite, electronic, capable of making high precision electronic distance measurements (EDM).

NOTE: Refer to paragraph II-2-4 for additional detailed specifications for the model T2000 manufactured by Wild Heerbrugg Instruments, Inc.

II-4-3. Type and description: Digital Theodolite with Electronic Distance Measurer, Pentax Model PX-06D. Refer to paragraph II-2-2 of this report.

Extensometers

II-5-1. Type and description: Electronic Rod Extensometer.

a. Model: A. MT. Extensometer

b. Manufacturer: Amberg Measuring Technique Ltd.
Ausstellungsstrasse 88
P.O. Box 3141
CH-8031 Zurich/Switzerland

Roctest, Inc.
7 Pond Street
Plattsburgh, NY 12901-0118
(Phone) (518) 561-3300

c. Pricing: Not available.

d. Operation: Basically, the A.MT. Extensometer is a rod-extensometer. Technical advances include a newly developed measuring head, consisting of a transducer with connected registration unit. The transducer measures deformations; the registration unit records and stores the measurements. The time interval for measurement readings can be programmed into the unit, thus deformations in any required time interval can be measured and recorded. Evaluation and drafting of the results is carried out on a desk computer.

e. Prerequisites: None.

f. Input specifications: Measurement Range (150 mm).

g. Output specifications:
Resolves 0.05 mm over 150 mm
Resolves 0.01 mm over 50 mm
Linearity: 0.25%

h. Interfacing: Uses an Epson HX 20 datalogger for data transfer.

i. Power requirements and recommendations: 6 V. battery provides power for at least four weeks. Power mains 220V/50Hz with built-in battery for ten hours battery operation in case of power failure.

j. Environmental conditions: Not specified.

k. Physical specifications: Transducer length: 390 mm including measurement range. Diameter: 28 mm

l. Reliability: Not specified.

m. Application information: For examining rock fractures around a cavity, control of safety of structures and personnel. Constant supervision of tunnels, shafts, and caverns.

n. Comments: Can be connected to Tektronix graphics peripherals.

II-5-2. **Type and description:** Extensometer, single position rod. This extensometer is a simple, rugged and reliable instrument that measures movement in rock, concrete, and soil materials. It is recessed completely within a borehole that may be 2 to 100 feet deep. The instrument consists of two expandable rockbolt type anchors and a long rod that is connected to the deep anchor and protrudes through the other anchor at the top of the borehole. Changes in the distance between the tip of the rod and the top anchor are indicative of the movement of material between the two anchors. The manufacturer also manufactures a remote readout linear potentiometer, Geokon model 1500, that converts the material movements into a corresponding variable electrical resistance. This allows the extensometer to be monitored remotely by any data acquisition system capable of measuring electrical resistance. The model A-1 extensometer with optional model 1500 potentiometer is ordered by using model number A-1A.

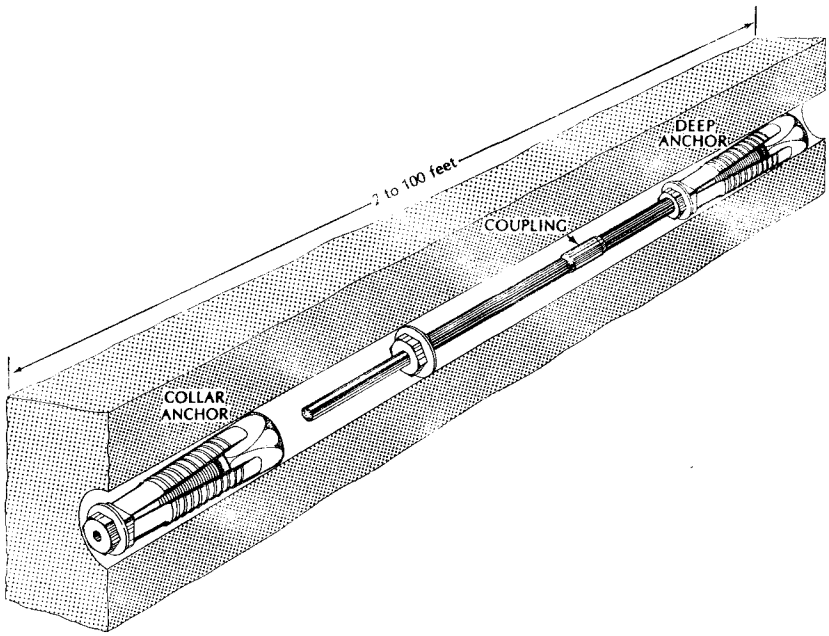

EXTENSOMETER, MODEL A-1 (PHOTO COURTESY OF GEOKON INC.)

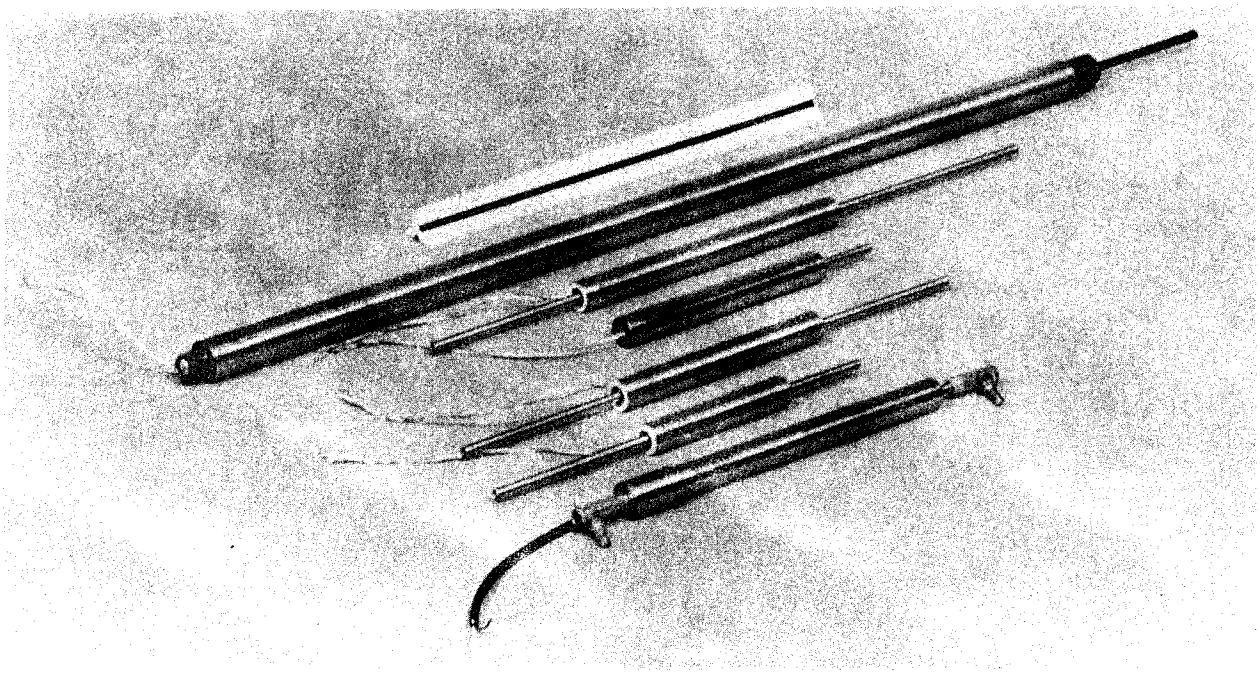

LINEAR POTENTIOMETER (PHOTO COURTESY OF GEOKON, INC.)

a. Model: Geokon model A-1A.

b. Manufacturer: Geokon, Incorporated
7 Central Ave.,
West Lebanon, NH 03784
(Phone) (603) 298-5064

c. Pricing: $300.00

d. Operation: This instrument is installed within a borehole giving it optimum protection. The maximum length of the borehole is 100 ft, and the maximum diameter is 1 3/4 in. This model consists of two expandable rockbolt type anchors which may be set by means of a socket wrench. A steel rod extends from the deepest anchor to the collar anchor which is set just inside the opening of the borehole. The rod terminates in a stainless steel tip inside a hole drilled in the collar anchor. The collar anchor has a stainless steel reference surface. The changes in distance between this surface and the tip of the long rod are indicative of material movement between the two anchors. The Geokon model 1500 remote readout has a linear potentiometer that is actuated by the movement of the long rod of the extensometer. The change in electrical resistance is reflective of the motion of the material. Electrically, the model 1500 may be read as a rheostat using any data acquisition system capable of measuring electrical resistance.

e. Prerequisites: None.

f. Input specifications: Not applicable.

g. Output specifications:

Range:	2. or 4. in. available
Resolution:	.001 in.
Linearity:	.1%
Accuracy:	.5%

h. Interfacing: The instrument may be monitored by any data acquisition unit that can measure electrical resistance if the Geokon model 1500 remote readout linear potentiometer is used. The following systems are capable of making resistance type measurements:

Hewlett-Packard 6108XAA, para. IV-14-5
Hewlett-Packard 3421A, para. IV-14-6
Solartron 3595, para. IV-14-10
Campbell CR21, para. IV-15-2
Fluke 2280B, para. IV-15-4

i. Power requirements and recommendations: Not applicable.

j. Environmental conditions: Not available.

k. Physical specifications: Not available.

l. Reliability: Not available.

m. Application information: The model A-1 extensometer combined with the model 1500 remote readout linear potentiometer can provide a good method for monitoring earth and other materials movements around a particular point of interest with an automatic data acquisition system. Data sheets with calibration coefficients for each gage are supplied by the manufacturer for use in the calibration of application software.

n. Comments: Other Geokon extensometers that have difference ranges or special applications may also interface to the model 1500 remote readout linear potentiometer giving them the capability of being remotely monitored by an automatic data acquisition system.

II-5-3. **Type and description: Vibrating wire extensometer.** Uses a vibrating wire connected to a strain gauge to measure displacement.

a. Model: P-265

b. Manufacturer: Geonor A/S
P.O. Box 99
ROA-0701 Oslo 7
Norway

c. Pricing: Not available.

d. Operation: As the tension of the vibrating wire and strain gauge varies, so does the resonant frequency of the stretched wire. A displacement of the extensometer is thus transformed to a variation in tension of the spring and also in the vibrating wire. The frequency is a measure of the displacement.

e. Prerequisites: Vibrating wire data acquisition system.

f. Input specifications: 200-mm displacement.

g. Output specifications: Frequency range: 800 to 2000 Hz. Linearity: 1% FR. Hysteresis: 2% or better. Signal span: Max 1000 Hz. Calibration: individual with 1/100.

h. Interfacing: Data acquisition equipment that is compatible with vibrating wire instruments. The following systems are capable of making measurements from vibrating wire gages:

Netpac Acurex, para. IV-14-2
Telemac CNF-7, para. IV-14-12
Terratrac, para. IV-15-3

i. Power requirements and recommendations: Not specified.

j. Environmental conditions: Not specified.

k. Physical specifications: Outside diameter: 57 X 760 mm. Weight: 6 kg. P-265-30 extension pipe: 25.4 mm X 4.6 m.

l. Reliability: Long term stability and rugged construction.

m. Application information: For monitoring internal deformation and cracking of dam embankment near the abutments. The extensometers are installed in a continuous chain over the length to be monitored.

n. Comments: Can be used with optional read-out equipment such as P-520F, Micrologger, or frequency logger manufactured by Geonor.

II-5-4. Type and description: **Extensometer, multi-position, borehole.** This instrument is well suited to measuring movement of cracks that are not surface accessible. The instrument is fitted into a borehole and anchored at five locations at various selected depths of the borehole. These locations may be between cracks in the interior of a structure to monitor how the concrete is moving. The instrument measures the relative displacement of the borehole anchors which are mechanically fixed to the wall of the borehole. The borehole may be horizontal, vertical, or inclined. Each anchor is connected to a rod which is attached to the sensing head. The sensing head

contains five linear potentiometers, one for each anchor. Changes in resistance seen at a sensing head potentiometer represent the movement of its associated anchor. By monitoring all five of the anchors, the user may track the movement of the concrete along a crack in the interior of the structure. This instrument may be remotely and automatically monitored by any automatic data acquisition system that is capable of measuring resistance.

a. Model: 51886 Extensometer Assembly
51891 Electrical Sensing Head

b. Manufacturer: Slope Indicator Company
Terrametrics
511 Orchard St., Suite 107
Golden, CO 80401
(Phone) (303) 279-7813

c. Pricing: $4000 (approximate), varies with size of the system.

d. Operation: This instrument measures strain within earth, concrete, or rock masses. The assembly is installed in a borehole and is capable of measuring large strains with a sensitivity of as little as .001 in. axial movement from five positions within the borehole. The anchor points may be either the grout-in or hydraulic type anchor. The grout-in anchor consists of number 6 rebar which is drilled and tapped (threaded) to mate with the rod and protective tube and is grouted into the bore hole. The hydraulic anchor is expanded hydraulically to lock the prongs firmly into the wall of the borehole. The precision electrical sensing elements on the electrical sensing head are 2-in. travel linear potentiometers. The potentiometer shaft is held in contact with the end of the extensometer rod by means of a compression spring.

e. Prerequisites: None.

f. Input specifications: Not applicable.

g. Output specifications:

Range:	2 in.
Resolution:	.001 in.

h. Interfacing: This instrument may be automatically and remotely monitored by any data acquisition unit that measures electrical resistance. The following systems are capable of making resistance type measurements:

Hewlett-Packard 6108XAA, para. IV-14-5
Hewlett-Packard 3421A, para. IV-14-6
Solartron 3595, para. IV-14-10
Campbell CR21, para. IV-15-2
Fluke 2280B, para. IV-15-4

i. Power requirements and recommendations: None.

j. Environmental conditions: None specified.

k. Physical specifications:

Weights:

Electrical sensor head	6 lb
2-inch linear potentiometer	1 lb
Reference head	3.5 lb
Hydraulic anchor	5.5 lb

Diameters:

Borehole	3 in.
Rods	1/4 in.

l. Reliability: Not available.

m. Application information: This instrument may be used to automatically monitor concrete movement due to cracks that are hidden below the surface of the structure. Data sheets with calibration coefficients for each gage are supplied by the manufacturer for use in the calibration of application software.

n. Comments: Because this instrument uses precise electrical resistance measurements to reflect the movement of the concrete, the resistance of the cables connecting the extensometer to the data acquisition unit must be considered.

II-5-5. **Type and description: Rod extensometer.** The single rod extensometer employs a rod anchored at one end of a drillhole, passing into a reference tube fixed in the hole collar.

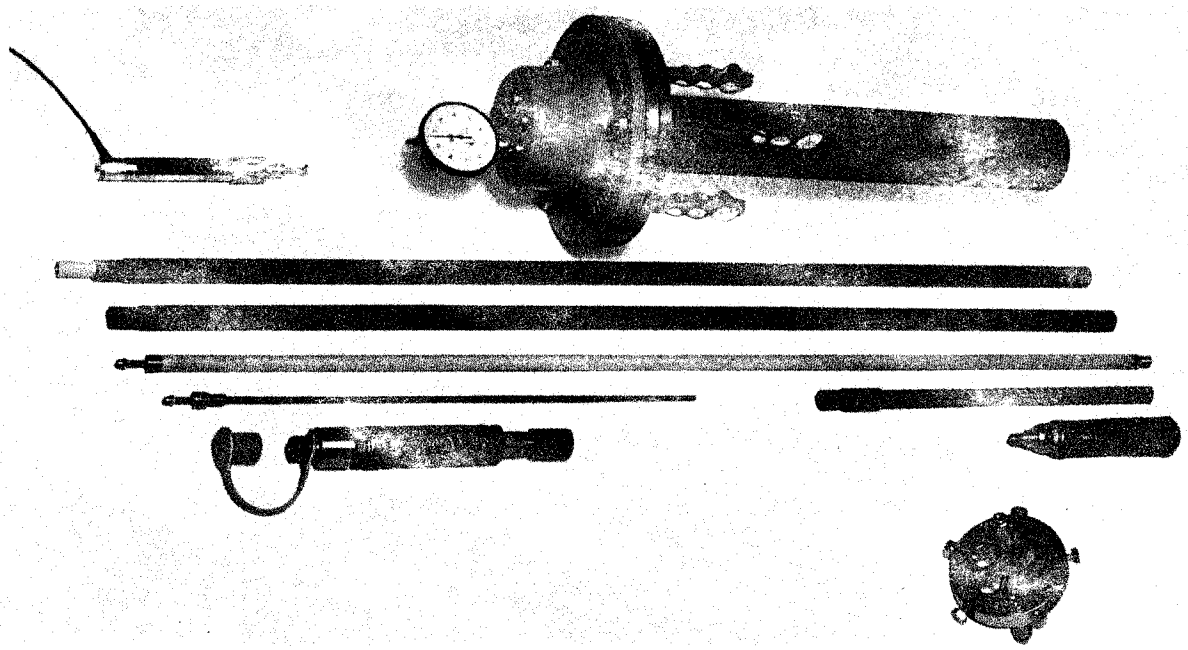

ROD EXTENSOMETER (PHOTO COURTESY OF SOLINST CANADA)

a. Model: Rod Extensometer.

b. Manufacturer: Solinst Canada, Ltd.
2440 Industrial Street
Burlington, Ontario L7P 1A5
(Phone) (416) 335-5611

c. Pricing: $1,500.00 for single rod unit.

d. Operation: Relative movement between the end anchor and the reference tube fixed in the hole collar is measured with either a dial depth gage or an electric transducer inserted through the reference tube. Registering onto the rod extends the reading range beyond that of the dial gage. Multiple rod installations monitor displacements at various depths using rods of varying length. Several single rod units may be installed in close proximity in drillholes of small diameter; alternatively several rods may be installed side by side in a single larger hole. Each rod is individually isolated by a close-fitting plastic sleeve. The complete assembly is grouted in place, fixing the anchors to the rock or soil, but allowing free movement of each rod within its sleeve. A single reference housing receives all rods from the one installation. Facilities are available for meter or digital remote readout, and also a visual alarm system

to give warning of excessive movements and indications when readings are required. Rod extensometer units may, when required, be surface mounted, for example to measure displacements across tension cracks or joints, and may be buried in fill or cast in concrete.

e. Prerequisites: Digital electronic (model 4.24/4.25) readout.

f. Input specifications: Range: ±25 mm.

g. Output specifications: Not applicable.

h. Interfacing: May be coupled to transducer readout to give continuous or remote control.

i. Power requirements and recommendations: Not applicable.

j. Environmental conditions: All components are proofed against corrosion and blast vibrations.

k. Physical specifications: Not available.

l. Reliability: Reliable, accurate, and simple to install and read.

m. Application information: Monitoring of rock and soil movements includes: relaxation of rock around tunnels and other underground openings; foundation settlements; subsidence, control of natural and cut slopes, quarry and mining excavations; displacements of retaining walls, bridge piers and abutments; and in situ tests.

Used for installation in boreholes or drillholes at any orientation. Can be cast in concrete, surface mounted, or buried in fill. Hole diameters 38 to 101 mm depending on installation problems and borehole stability. Reset range adjustment up to 500 mm.

n. Comments: Free from creep, kinking, and other inaccuracies associated with the use of tensioned wire, the simple single rod instrument is ideal for installation in small drillholes as a safety measure during construction. Rods may be recovered for subsequent reuse. The number of rods depends on the size of the borehole. A magnet-probe extensometer should be used for more than six measuring points or where hole diameter is the limiting factor.

II-5-6. **Type and description: Extensometer, radio frequency telemetry, TELEMAC RADIOFOR.** The RADIOFOR is a single-base-length borehole extensometer coupled with an AM radio transmitter used for medium range interrogation. This extensometer system is suited for sites where access is difficult, or sites where an electrical cable would hamper site work or run the risk of damage. The system measures the relative displacement of a sensor located on an extensometer anchored in a borehole and outputs this information in the form of an electrical frequency that is transmitted by the AM transmitter. This amplitude-modulated transceiver can accommodate multiple-point extensometers as well as other types of TELEMAC's induction instruments, such as joint meters, as an optional extra. The readout set converts the radio frequency into a numerical form and displays it.

a. Model: TELEMAC, RADIOFOR

b. Manufacturer: TELEMAC
(Marketed by)
Roctest, Inc.
7 Pond Street
Plattsburgh, NY 12901
(Phone) (518) 561-3300

c. Pricing: Extensometer transmitter: $3,000.00
Receiver readout set: $9,000.00

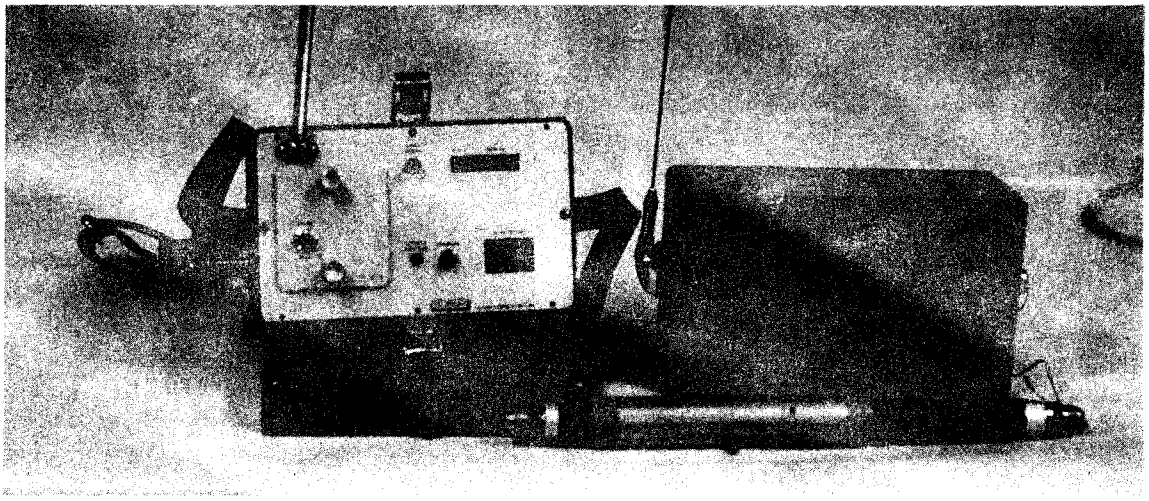

TELEMAC RADIOFOR (PHOTO COURTESY OF TELEMAC)

d. Operation: The RADIOFOR system comprises a single-base-length extensometer, a radio transceiver with power supply, and a portable radio-driven frequency meter. The borehole extensometer consists of a PVC telescoping casing cemented into the ground, an invar steel rod cemented or clamped at the bottom of the borehole, and an induction sensor at the free end of the central rod at the borehole collar. The frequency value of the output signal from the sensor depends on the position of the sensor in respect to a metal reference ring on the casing. There is no mechanical linkage between the sensor and the ring. The transceiver and power supply module just below the borehole collar contains the power pack, transceiver, and aerial.

The system is energized between measurements. When interrogated by a frequency-signal selector code, power is switched on to the sensor, and its frequency output is transmitted back to the readout set by an AM radio signal. The portable frequency meter and readout set can interrogate up to 100 instruments. Each instrument address code is converted to a train of frequency signals, transmitted by means of an AM carrier. The return signal from the instrument is decoded in the readout set, and the frequency reading is displayed in numerical form.

e. Prerequisites: None.

f. Input specifications: Range: 150 mm. Resolution: better than .0015 mm.

g. Output specifications: Not available.

Precision: Depends on extensometer length and degree of straightness of borehole, determining the friction forces tending to prevent the central rod from sliding inside the casing. In practical terms, precision can be estimated at ±0.2 mm for a 20-m base length extensometer in a moderately straight borehole.

Transceiver:
Carrier frequency: 27 mHz
Sensor frequency: 30 to 40 kHz
Transmission time: 8 seconds/measurement
Radio range: Underground - 30 m
Flat terrain - 100 m

h. Interfacing: Readout set displays numerical value of the frequency of the sensor which must be entered into a computer by a data entry method for visually displayed data. One method described in the data entry section of this report would be the GEMS electronic notebook. Refer to para. IV-8-2.

i. Power requirements and recommendations:

Transceiver power supply:
8 no. 1.5 V alkaline - manganese R20 dry cells
1 no. 6 V SAFT dry cell

Readout set:
R14 cadmium - nickel dry cells (rechargeable, charger included)

j. Environmental conditions: Operating temperature: -10 to 60 ^{o}C for the sensors radio transmitter and readout set.

k. Physical specifications: Not available.

l. Reliability: None given.

m. Application information: The system is suited for measuring movement inside structures that are not surface accessible and where a radio telemetry option is needed. The displacement sensor may be interrogated by an AM radio transceiver with the output of this sensor being visually displayed on a readout set. This reading then may be put into a computer using some type of data entry method for visually displayed data.

n. Comments: None.

Humidity

II-6-1. **Type and description:** Humidity transducer.

a. Model: H322 series

b. Manufacturer: BEC Controls Corp.
2510 Northwest Station
Davenport, IA 52809
(Phone) (319)285-9008

c. Pricing: Wall mount $442.00; duct mount $538.00; outdoor mount $640.00.

d. Operation: The H322 humidity sensing element is a hygroscopic polymer, gold vacuum sputtered surface which creates a capacitance response with change in relative humidity.

e. Prerequisites: None.

f. Input specifications: 0-100% relative humidity.

g. Output specifications: Optional 4-20mA, 1-5VDC, and 0-10 VDC
Accuracy: ±3% (5%-85% R.H.); ±5% (0 to 5% and 85 to 100% R.H.)

h. Interfacing: Requires process current or voltage receiver. The following systems contain 4-20 mA process current receivers:
Netpac Acurex, para. IV-14-2
Hewlett-Packard 3421A, para. IV-14-6
Terratrac, para. IV-15-3
REMAC 3100, para. IV-14-14

i. Power requirements and recommendations: Options are 24 VDC, 24 and 115 V AC, as well as custom supply voltages.

j. Environmental conditions: Temperature Range: 0-185 °F while operational, -40 - 185 °F in storage.

k. Physical specifications: 65 x 136 x 73 mm

l. Reliability: Has long range characteristics unaffected by condensation of water on the sensor surface. Aggressive pollutants in the air have little effect on the performance. However, exposure to vapors or certain solvents such as the acetones and benzenes will shortly oxidize the sensor element surface.

m. Application information : Can be wall-mounted, duct-mounted, or placed in an enclosed integral assembly for outdoor use.

n. Comments: Units may be equipped with LCD digital readouts and a temperature sensor.

II-6-2. **Type and description: Humidity transducer.** Uses a plastic sensing element for humidity and a resistance temperature detector (RTD) for temperature measurement.

a. Model: 90.515-F series (JUMO)

b. Manufacturer: JUMO Process Control, Inc.
410 Garibaldi Ave.
Lodi, NJ 07644
(Phone) (201) 779-7744

c. Pricing: $300 to $400, depending on model

HUMIDITY TRANSDUCER ROOM MODEL (PHOTO COURTESY OF JUMO PROCESS)

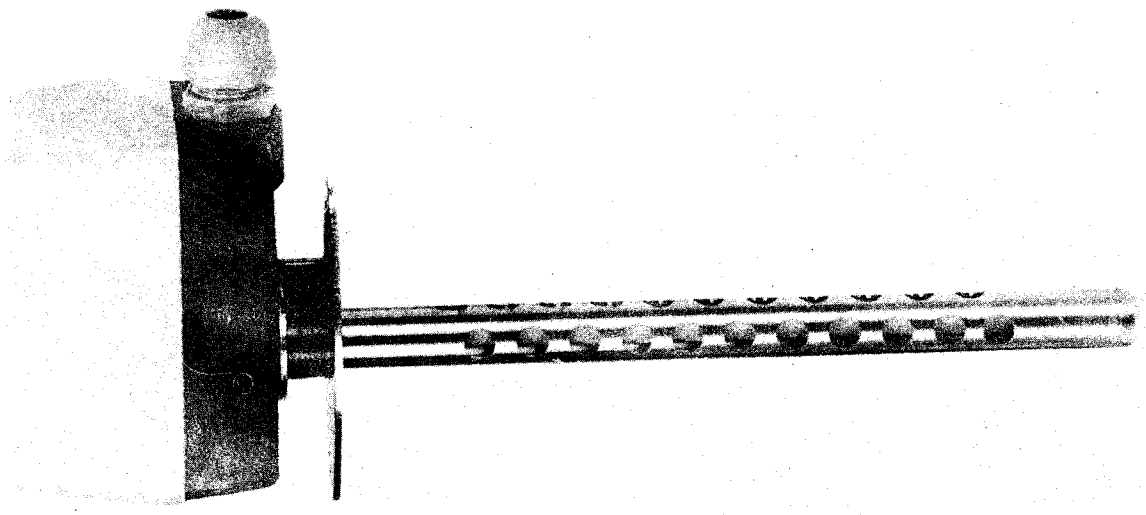

HUMIDITY TRANSDUCER DUCT MODEL (PHOTO COURTESY JUMO PROCESS INC.)

d. Operation: The plastic sensing element changes its length with atmospheric humidity; this length change is transmitted directly to a precision potentiometer whose winding and slider are made from a gold alloy. This ensures reliable contact action and extremely low contact resistance. The output can be either 50-30-50 ohm, 100-138.5 ohm, or 0-100 ohm.

e. Prerequisites: Requires a signal conditioner, model 90.515-F21 to convert the resistance change into a standard current change. Refer to paragraph IV-17-4 for additional information.

f. Input specifications: 0 to 100% relative humidity.

g. Output specifications: Accuracy: ±2.5%. Humidity resistance transmitter: 50-30-50 ohm, 100-138.5 ohm, 0-100 ohm. Temperature sensor: -20 to +80 °C. Pt 100 in 2-wire circuit.

h. Interfacing: Requires a signal conditioner to convert resistance changes to a process current output. Model 90.515-F21, refer to para. IV-17-4.

i. Power requirements and recommendations: Not applicable.

j. Environmental conditions: 0 to 50 °C on housing.

k. Physical specifications: Duct model: Aluminum die casting with shock-resistant polycarbonate cover. Weight: 0.6 kg. Room model: Shock-resistant plastic with aluminum front panel. Weight: 0.2 kg.

l. Reliability: Not specified.

m. Application information: Duct model has an oval flange and the room model has a wall mounting. The different resistance outputs are compatible with indicators, controllers, and recorders with appropriate input circuitry.

n. Comments: The model 90.515-F21 signal conditioner converts the resistance of the resistance transmitter to a proportional 0-20 mA current signal.

Inclinometers

II-7-1. Type and description: **Inclinometer system, Geokon MK3.** This inclinometer system is designed to measure the lateral movement of earthwork or structures. There are two variations of this model, a uniaxial version and a biaxial version. The principle of operation is the same in both. In the biaxial version a torpedo containing servo-accelerometers in two planes at right angles to each other is passed through an access tube. At regular intervals down the tube, readings of the angular or horizontal displacement of the tube are taken. Provided that the location of one end of the access tube is known, a complete profile of the tube can be obtained. These readings are taken by electronic readout equipment at ground level. This readout equipment can be a liquid crystal display (LCD), providing a visual display of the data on an electronic clipboard or a solid-state cartridge readout unit which stores the data on a data cartridge for later entry into a computer.

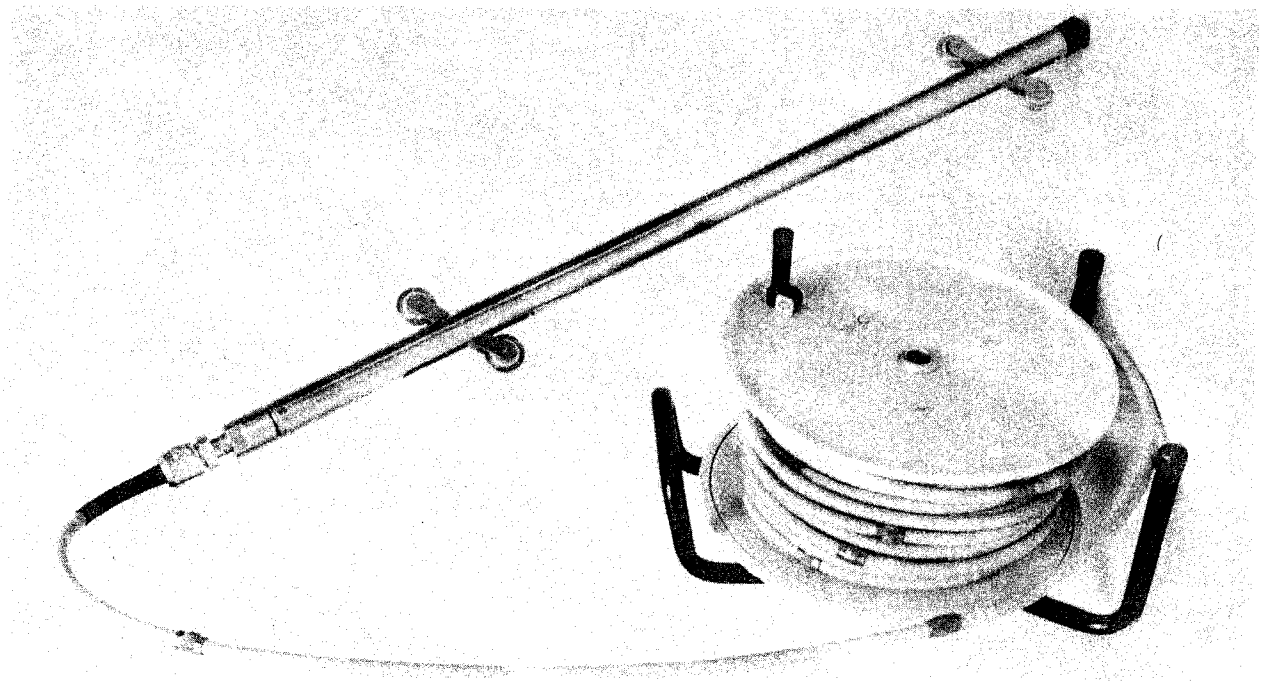

INCLINOMETER PROBE (PHOTO COURTESY OF GEOKON, INC.)

a. Model: Geokon MK3

b. Manufacturer: Geokon, Incorporated
7 Central Avenue
West Lebanon, NH 03384
(Phone) (603) 298-5064

c. Pricing:

Probe	uniaxial:	$3,800.00
	biaxial:	$5,400.00
electronic clipboard		$1,600.00
cartridge readout		$6,500.00

d. Operation: The manual readout unit has two large LCDs that display the angular deviation of each accelerometer simultaneously while the torpedo is lowered down the access tube. The power pack is a rechargeable lead acid accumulator, and a fully automatic battery charger is supplied with the unit. The solid-state cartridge readout unit has the capability of storing data and later transferring them to a computer. This unit has an alphanumeric display that is used to instruct the operator in the correct steps to obtain readings. The data are stored on a removable cartridge which may be interrogated at any time. The cartridge has an 8-kbyte storage capacity which is enough to store about 3,500 readings. Direct interfacing to a computer is accomplished via an EIA RS-232-C output, and no other equipment is required to complete this link. The Baud rate of the RS-232-C data port is selectable which allows it to operate with most popular minicomputers. A battery charger and carrying case are also supplied with the unit.

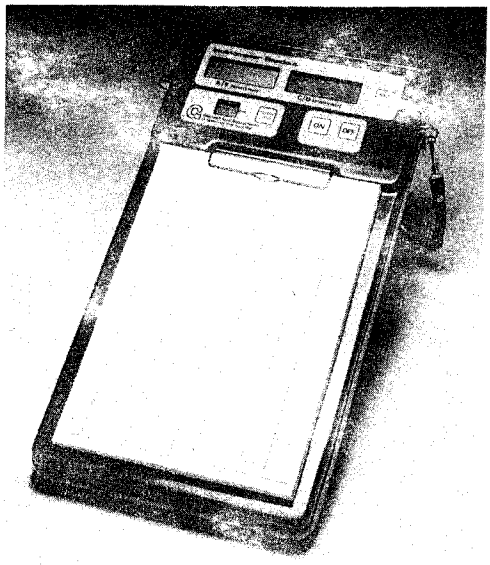

ELECTRONIC CLIPBOARD (PHOTO COURTESY OF GEOKON, INC.)

CARTRIDGE READOUT (PHOTO COURTESY OF GEOKON, INC.)

e. Prerequisites: None.

f. Input specifications: None specified.

g. Output specifications:

Absolute range: ±90 degrees of vertical
Working range: ±30 degrees of vertical
Linearity: ±0.02 % full scale
Span drift: ±0.015% reading / °C
Zero drift: ±0.01% FS / °C
Shock resistance: 1000g, 0.001 sec

h. Interfacing: Using the electronic readout unit, direct interfacing with a computer is accomplished via an EIA RS-232-C output.

i. Power requirements and recommendations: The battery life of the internal lithium battery for the electronic readout unit is 20 hours of continuous use. Automatic battery recharger is included with system.

j. Environmental conditions:
Sensor:
Temp. Range: -5 to 70 °F.
Cross axis sensitivity: ±.015% FS per degree.
Electronic readout: 0 to 50 °C.

k. Physical specifications:
Sensor: Diameter - 28.5 mm
Length - 750.0 mm
Weight - 2.0 kg

Manual readout: Dimensions - 465 mm X 245 mm X 45 mm
Weight - 2.0 kg

Elect.readout : Dimensions - 450 mm X 260 mm X 110 mm
Weight - 6.0 kg

l. Reliability: Not available.

m. Application information: This system is used to measure lateral movements in masses by providing a profile of casings constructed in these masses. This system comes with an electronic readout unit that allows the user to store over 3,500 readings and easily transfer them to a computer for data reduction.

n. Comments: None.

II-7-2. Type and description: **Inclinometer, Slope Indicator Co.** This inclinometer is a portable, battery-powered

inclinometer system featuring dual, three-digit LCD; biaxial servo accelerometer sensor probe; and a compact, shock-absorbing carrying case containing both sensor probe and indicator components. This system is used to measure critical lateral movements in dams, embankments, slopes, and landslides. It detects the inclination of its casing from the vertical. By taking readings at regular intervals inside the casing, a profile of the casing may be constructed.

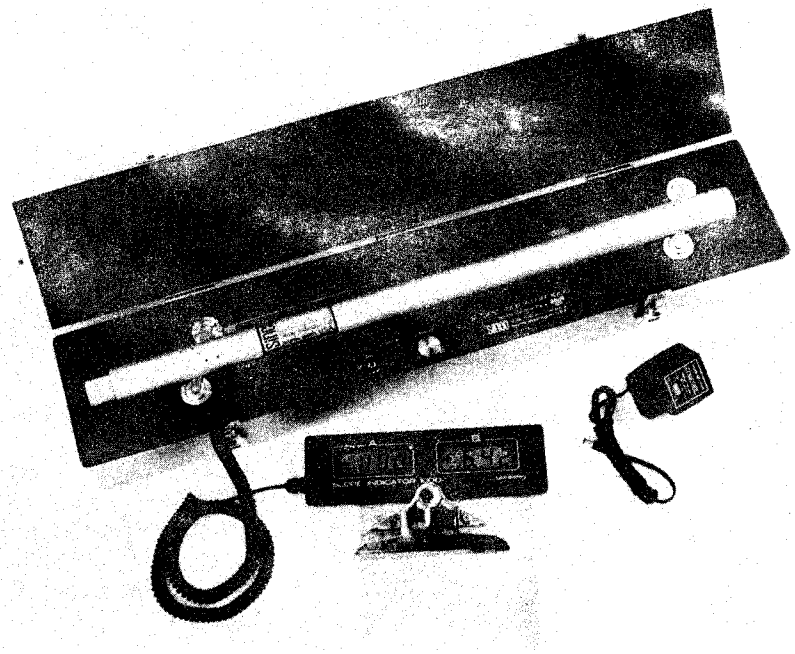

INCLINOMETER, MODEL 1000 (PHOTO COURTESY OF SLOPE INDICATOR CO.)

a. Model: Model 1000

b. Manufacturer: Slope Indicator Co., Terrametrics
511 Orchard St., Suite 107
Golden, CO 80401
(Phone) (303) 279-7813

c. Pricing: $4,500.00. Includes indicator, sensor, charger, probe, and clipboard.

d. Operation: The dual LCD displays both sensor axes simultaneously with no switches or control buttons necessary on the display panel. The dual LCD digital display shows the angle of inclination from vertical in terms of 2.5 times the sine of that angle (2.5 X sine

of the angle) to within three significant digits. The system accuracy for near vertical (±3 deg) casing installations is ±0.5 in. / 100 ft. These measurements may also be taken and stored by any data logging system that can handle servo accelerometers.

e. Prerequisites: None.

f. Input specifications: Not applicable.

g. Output specifications:

Sensitivity: .0096 in. / 2 ft of casing
Accuracy: ±.5 in / 100 ft of casing
Range: 0 to 53 deg

h. Interfacing: This instrument may be interfaced to any data logging system capable of handling servo-accelerometers. Also, the system comes with a dual LCD indicator for visual monitoring.

i. Power requirements and recommendations: A DC excitation voltage is supplied to the accelerometer by the monitoring device.

j. Environmental conditions:

Operating Temperature: 0 to 120 °F.
Temp. Coefficients:
Sensor: ±(.008% reading + .008% FS)/°F
±(.015% reading + .015% FS)/°C
Display: ±(.008% reading + .0006% FS)/°F
±(.015% reading + .001% FS)/°C

Weather-tight case: Splash-proof, not submersible.

k. Physical specifications: Weight: 23 pounds. Carrying case dimensions: 30" X 5.5" X 4.5". Wheel base 19.69".

l. Reliability: Not available.

m. Application information: This system is used to measure lateral movements in masses by providing a profile of casings constructed in these masses. This instrument may be read automatically by a data logging system or visually by a dual LCD.

n. Comments: Telemac also makes a similar model MPF-1 by Roctest, Inc., 7 Pond Street, Plattsburgh, NY 12901.

II-7-3. **Type and description:** **Inclinometer, Digitilt RPP model 50368 recorder processor printer (RPP).** The Digitilt RPP is designed to semiautomatically read any of several Digitilt inclinometers (regular or horizontal), digitize the data, store them on magnetic tape, and process the data for immediate representation by the RPP's built-in printer. Data may be printed in either tabular or graphic form. The RPP may also be used to perform a wide variety of editing, correcting, adjusting, and error checking routines. The A and B axes are calculated individually, using the direct and reciprocal values (0 and 180 deg.) for each axis. The direct and reciprocal values may be displayed simultaneously for comparison. Check sum data for all or part of survey may be tested (mean and standard deviation) to identify and isolate poor quality data. The CPU of the RPP contains 20k of RAM, enough for a survey of 700 depth increments. Data from individual surveys are transferred to RAM to the data cassette as a file. Cassettes are formatted to store as many as 126 separate files per side. The RPP includes an EIA RS-232-C serial data port to provide interfacing with other computers and compatible peripherals. Fifteen different transfer rates from 75 to 9600 baud may be selected. Other RPP features include: an integral calendar/clock for real-time identification of traverse data, a two-line 32-character LCD array, a 32-column thermal printer, and a 50-key (QWERTY) keyboard.

a. Model: Digitilt RPP
Model 50368 Recorder Processor Printer

b. Manufacturer: Slope Indicator Co.
Terrametrics
511 Orchard St., Suite 107
Golden, Colorado 80401
Phone: (303) 279-7813

c. Pricing: $12,500.00

d. Operation: Overall operation of the system is controlled by a series of commands entered by means of the keyboard. The record sensor command sets up file parameters, reads and displays the inclinometer data, records the data in memory, advances the inclinometers in memory, advances the inclinometers depth increments, adjusts for variable depth increments, and stores data in the tape cassette. The check sum command provides a mathematical test of the stored data to identify erroneous or questionable readings. With this routine, it is possible to compute the mean and standard deviations of the direct and reciprocal readings of the A and B axes. The computer data command instructs the unit to calculate the results of a survey. The reduced data may then be represented either in the form of cumulative displacements from a previous survey, or as cumulative deflections from vertical at each depth.

The RPP provides many editing commands common to most computers in general. These permit inclinometer data to be adjusted, corrected, stored, and recovered at will. The RPP also incorporates a number of "housekeeping" commands. The inclinometer readings are displayed initially on the two-line LCD array. A hard copy of either reduced or raw data is available by using the integral printer. The printer also provides graphs of the processed data. The EIA RS-232-C port allows these data to be transferred to another computer or peripheral.

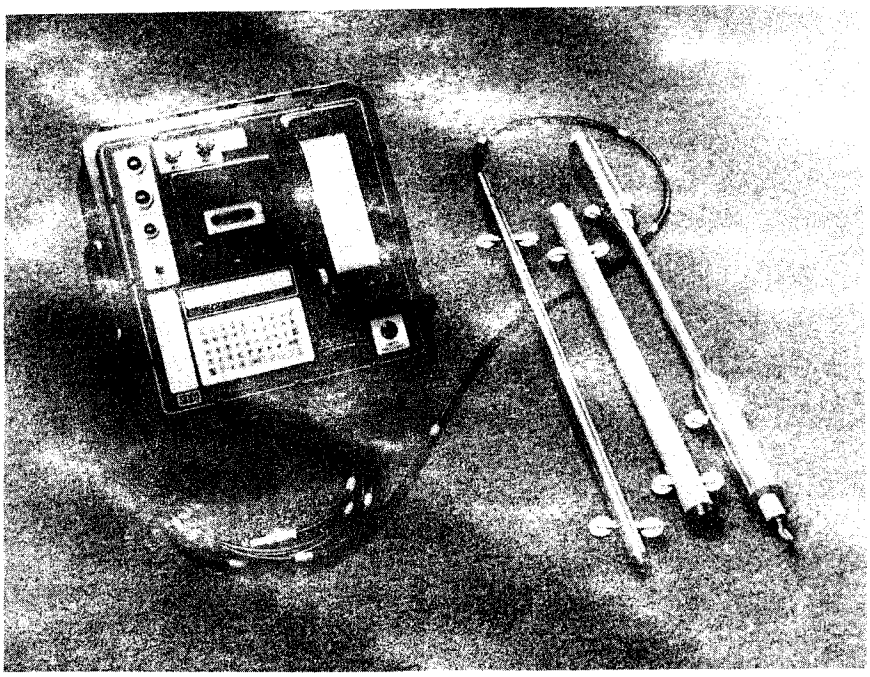

RPP MODEL 50368 (PHOTO COURTESY OF SLOPE INDICATOR CO.)

e. Prerequisites: Sinco Digitilt inclinometers and Digitilt spiral sensors, models 50325E, 50325M, 50329, or 50901.

f. Input specifications:

Transducer:	Two 0.5-g closed-loop force-balanced servo accelerometers
Range:	$\pm 30^{\circ}$ from vertical expandable to $\pm 90^{\circ}$

g. Output specifications:

Resolution:	.0001 ft / 2 ft of casing .02 mm / 0.5 m of casing
Accuracy:	0.1 inch / 100 ft
Temperature:	$\pm$(0.008% Reading + 0.0006% FS)/$^{\circ}$F., $\pm$(0.015% Reading + 0.001% FS)/$^{\circ}$C

h. Interfacing: EIA RS-232-C serial input/output, 75-9600 baud.

i. Power requirements and recommendations: 6 V, 20 ampere-hour Nickel-Cadmium, rechargeable battery. Charging from 100/120/140/200/220/240 VAC or 12 VDC sources

j. Compatible equipment: Any computer or peripheral capable of using the EIA RS-232-C data format.

k. Software available: Unit is menu-programmed with self-contained software.

l. Environmental conditions: The model 50368 is environmentally packaged to permit operation under adverse weather conditions.

m. Application information: The Sinco model 50368 Digitilt recorder processor printer is a combination readout instrument, data storage and retrieval system, and microcomputer for taking Digitilt inclinometer data. This unit makes it possible to reduce data, perform statistical error checks, and generate processed data summaries in either tabular or graphic form before leaving the site. The RPP may also store the data on magnetic tape and dump it to another computer using the EIA RS-232-C data format.

n. Comments: None.

II-7-4. **Type and description: Inclinometer, Slope Indicator Co.** The automatic in-place inclinometer is a multisensor displacement measuring system for installation in boreholes, which enables the engineer to monitor minute movements in landslides, dams, embankments, buildings, or open-pit mines. It supersedes the standard inclinometer in situations where frequent or continuous measurements are required.

In-place inclinometers may be monitored either manually or automatically. The manual system consists of one or more sensors, placed where movement is to be monitored, a readout station and portable indicator. Automatic systems consist of one or more sensors, a junction box, power supply, and a data logger. Options include alarms and transmission of data to remote locations via telephone lines. For safety or engineering purposes, the alarm option automatically generates an alarm when movement of any individual sensor exceeds a preset threshold.

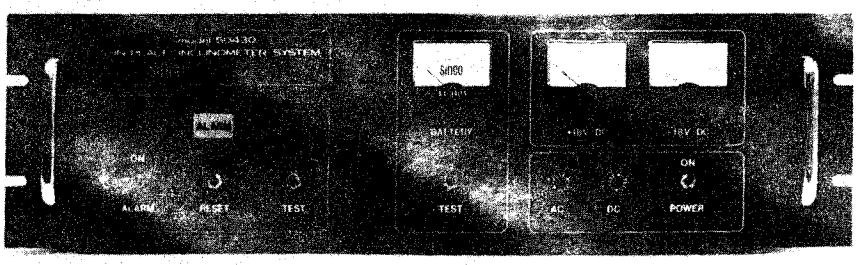

CONTROL UNIT (PHOTO COURTESY OF SLOPE INDICATOR CO.)

a. Model: Model 50430

b. Manufacturer: Slope Indicator Co., Terrametrics
511 Orchard St., Suite 107
Golden, CO 80401
(Phone) (303) 279-7813

c. Pricing: Model 50432--Uniaxial sensor - $1,950.00
Biaxial sensor - $2,655.00

Automatic system junction box
4 sensor - $1,500.00
8 sensor - $1,880.00
16 sensor - $2,475.00

Excitation/alarm control unit - $2,955.00, model 50430

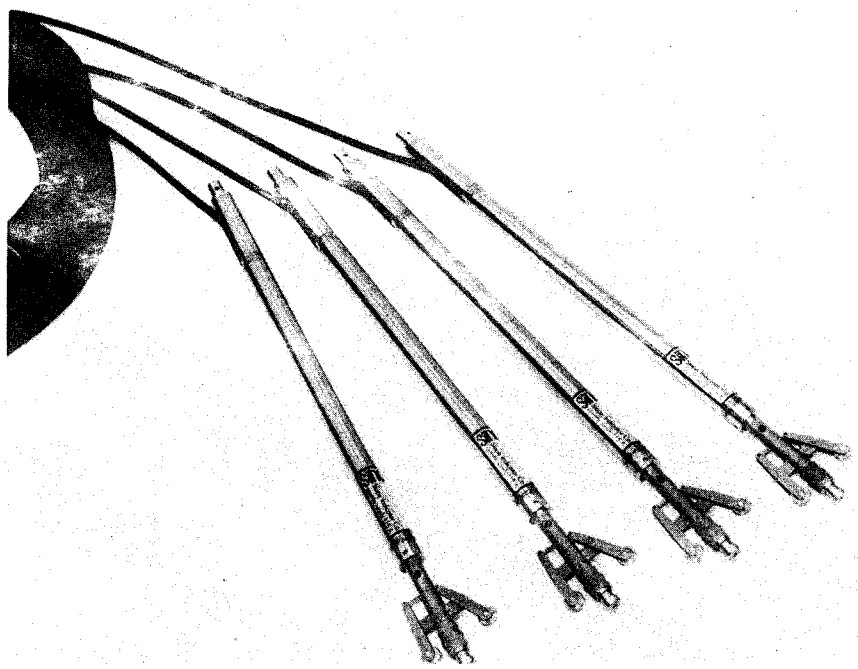

IN-PLACE INCLINOMETER PROBES (PHOTO COURTESY OF SLOPE INDICATOR)

d. Operation: The in-place inclinometer system allows from 1 to 16 inclinometers connected end-to-end in a single borehole to be automatically monitored. A precision universal joint on the bottom of each sensor housing connects to the next lower sensor and tube assembly, allowing articulate movement.

The cable from each sensor is brought up the casing and terminated in a weatherproof junction box mounted on top of the casing. The sensors may include one or two precision closed-loop accelerometers depending on whether one or two axes of movement are desired to be measured. The lateral movement of one end of a sensor relative to the other end can be measured to better than .001 in. over a ten-foot gage length. The automatic monitoring system that is used with the in-place inclinometers can scan and record data from up to 40 sensors once every fifteen seconds. Offsets may be programmed so that the initial deflection of each gage can be offset to zero. Also available is an alarm option that continuously monitors the status of all gauges and compares the deflection change of each gage to a preset threshold. If this threshold is exceeded, the system generates an alarm.

e. Prerequisites: None.

f. Input specifications: None given.

g. Output specifications:

Sensor:

Full Scale: $\pm 15^{\circ}$ (SI units)
$\pm 30^{\circ}$ (non-SI units)

Resolution: .001 in. for 10 ft

Hysteresis: .001 in. for 10 ft

Temp. Coef.: $\pm$.002 in./$^{\circ}$F for 10 ft

Voltage output: 12.000 X sin (non-SI system)
30.00 X sin (SI system)

Automatic Monitoring System:

Range: $\pm$30.000 in.

Resolution: .001 in.

Accuracy: $\pm$.02% reading, $\pm$.01% of range

Temp. Coef.: $\pm$.003% reading/$^{\circ}$F

Sample rate: 3 sensors/sec.

h. Interfacing: The automatic system may be interfaced to a telephone line via a modem. The modem that formats the data for transmission over the phone lines may be provided with the equipment described here. When a call is placed from a remote data acquisition unit, the in-place inclinometer automatically answers the phone and begins to transmit all the information necessary to describe the status of the system. Data are transmitted repeatedly until the caller hangs up. Data transmitted includes the deflection of each gage as well as the status of the alarm system.

Remote data acquisition units are available. These units include an acoustic adapter so they may be coupled to any standard telephone set. The data acquisition units decode the data received via the acoustic adapter or modem, and print a record of these data. The units are portable and are powered by 115 VAC 60-Hz power.

i. Power requirements and recommendations:

Voltage: 115/230 VAC ±10%
Frequency: 60 Hz (50 Hz optional)
Consumption: less than 125 watts

j. Environmental conditions:

Operating Temperature: Sensor - 0 to 120 °F.

Automatic Monitoring System - 32 to 120 °F.

Humidity: Automatic Monitoring System: 0 to 90% noncondensing

k. Physical specifications: Not available.

l. Reliability: Not available.

m. Application information: The in-place inclinometer system is suited for situations where frequent or continuous measurements of the lateral movement of dams, embankments, or similar structures are needed.

n. Comments: None.

II-7-5. **Type and description: Inclinometer, borehole.** A force balance accelerometer probe attached to a 200-m (max) electrical cable with distance markings every 0.5 m. Includes a digital readout of two orthogonal directions and a magnetic tape recorder.

a. Model: MKIV

b. Manufacturer: Solinst Canada, Ltd.
2440 Industrial St.
Burlington, Ontario, Canada L7P 1A5
(Phone) (416) 335-5611

c. Pricing: Complete system is $30,000.00.

d. Operation: An access tube with four internal keyways may be grouted into a borehole, embedded in fill or in concrete, or secured to the surface of the structure to be monitored. The inclinometer probe travels along the length of the tube with its wheels located in one or the other pair of keyways depending on the required

measuring direction. A force balance accelerometer within the probe responds to changes in tube alignment. Displacement readings may be taken at intervals of 0.5 m or 1 m along the tube and displayed on a portable digital readout.

The probe position may be determined using graduations on the cable-measuring tripod. Equipment is available for rapid on-site calibration of the probe and readout equipment. Ring magnets may be fixed at intervals along the tube in order to measure axial displacements as well as the two components of movement perpendicular to the tube axis. Movement of the magnets is detected using a magnet settlement probe.

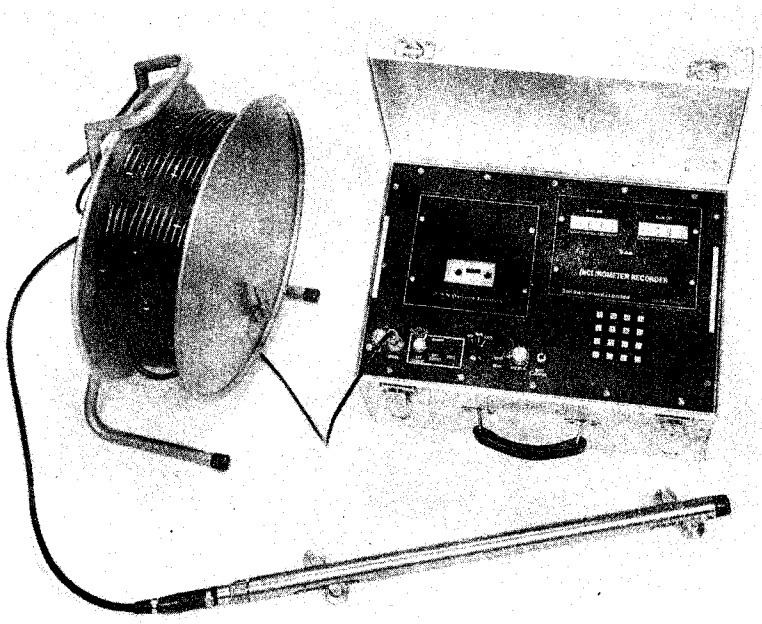

MKIV INCLINOMETER (PHOTO COURTESY OF SOLINST CANADA)

e. Prerequisites: A magnetic settlement probe, if third detection measurements are required. Model 4.4 tape reader, model 4.1 inclinometer recorder.

f. Input specifications: Not available.

g. Output specifications: Resolution - ±0.1 mm(model 4.1)
±0.1 mm(model 4.2)
±1.0 mm(model 4.3)

h. Interfacing: EIA RS-232-C interface links with printer, plotter, computers, modems, etc. (Models 4.5, 4.6, 4.7)

i. Power requirements and recommendations: Not specified.

j. Environmental conditions: Not specified. All components are fully waterproof.

k. Physical specifications: Not specified.

l. Reliability: Simple to install and to read. Probe calibration may be checked at any time. One probe reads at many locations; only the access tubes are permanently installed in the ground.

m. Application information: Uses for this device can be: stability of natural and cut slopes; lateral movement, heave and settlement of foundations; construction control and stability of embankments and dams; deflection of bridge piers, abutments, retaining and diaphragm walls; stability of shafts, tunnels and underground works; and control of subsidence.

n. Comments: None.

Leveling

II-8-1. Type and description: Leveling device, tilt meter. This tilt meter leveling device (Digitilt) is a rapid reading, precise, and portable system designed for periodic monitoring of horizontal and vertical tilt of structures, soil, and rock masses. In general, this tilt meter may be used where the failure mode of a concrete structure or other similar masses may contain a rotational component. Ceramic tilt plates are bonded to the surfaces of the structures to be monitored. These tilt plates experience the same angular rotation as the structure. The portable tilt meter sensor is placed on each ceramic plate for monitoring. By measuring these tilt plates periodically, the user may determine a rate of angular deformation of the structure.

a. Model: Sensor - horizontal only: model 50322. Horizontal and/or vertical: model 50344.

b. Manufacturer: Slope Indicator Co., Terrametrics
511 Orchard St., Suite 107
Golden, CO 80401
(Phone) (303) 279-7813

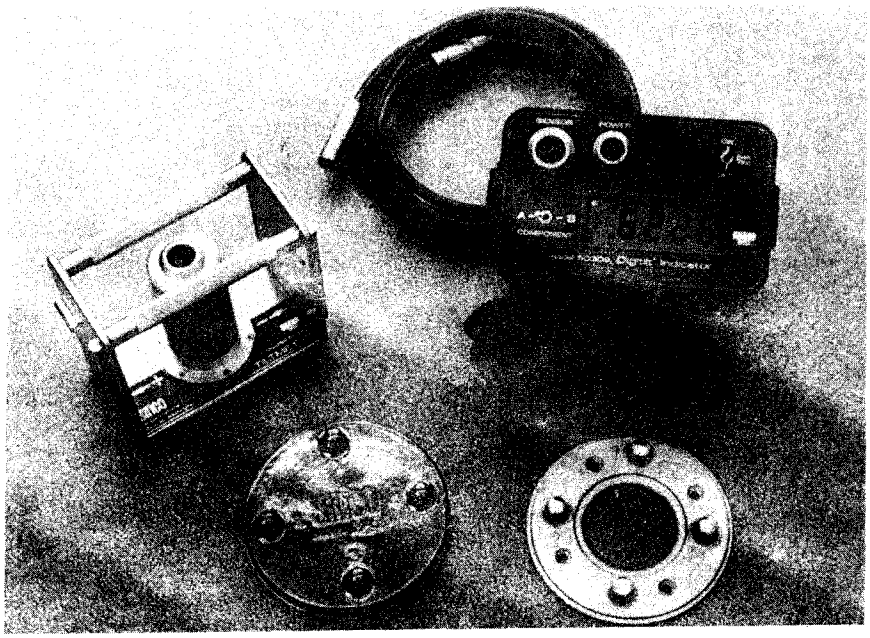

DIGITILT TILTMETER (PHOTO COURTESY OF SLOPE INDICATOR CO.)

c. Pricing: Sensors: $2,600.00
Ceramic tilt plates: $32.00
Digitilt indicator: $1,550.00

d. Operation: The ceramic tilt plates are cast from specially formulated porcelain with four sensor orientation pegs in the upper surface. These plates are bonded to the surface to be monitored using grout or epoxy resin. The tilt meter sensor is a closed-loop, force balanced servo accelerometer specifically designed for tilt measurements. It senses changes in tilt of the tilt plate attached to the surface of a structure. The sensor is oriented on three pegs of the tilt plate and the output of the accelerometer provides an indication of the angle from vertical to within ±10 seconds of arc. This instrument may be monitored by any data logger capable of handling servo accelerometers. Also, Slope Indicator Co. offers a hand-held indicator unit that displays 2 X sine of the angle to a 4-digit bipolar reading. This allows a user to measure change in angles to ±10 seconds of arc at vertical.

e. Prerequisites: None.

f. Input specifications: Not applicable.

g. Output specifications: Range - ±30 ^{o} from the vertical. Sensitivity - 1 part in 10,000.

h. Interfacing: This instrument may be interfaced to any data logger capable of handling closed loop, servo-accelerometers. Also, Slope Indicator Co. makes a hand-held indicator for visual monitoring.

i. Power requirements and recommendations: A DC excitation voltage is supplied to the accelerometer by the monitoring device.

j. Environmental conditions: Temperature coefficients - ±.003% of range and ±.003% of reading / ^{o}F.

k. Physical specifications:

Sensor, model 50322

Sensing element: a closed-loop, force-balanced servo accelerometer mounted with sensitive axis perpendicular to the surface of the plate.

Dimensions: 6-in. (15.2 cm) diameter, semi-circular base, 3 in. (7.6 cm) high.

Material: Base - steel, chrome-plated.
Accelerometer housing - aluminum.

Sensor, model 50344

Sensing element: Same as model 50322.

Dimensions: 6.5 in. (16.5 cm) X 3.5 in. (8.9 cm) X 5.75 in. (14.6 cm).

Material: Same as model 50322.

l. Reliability: Not available.

m. Application information: These sensors may be used to monitor, automatically and constantly, the change in angle of a surface. Also, because of its portability, one sensor may be used to periodically monitor the change in angle on many surfaces.

n. Comments: None.

II-8-2. Type and description: **Apparatus, leveling apparatus.** This apparatus uses two reference points in a tunnel and two containers connected by a Rilsan plastic tube. A frictionless annular float in each vessel moves up and down as the level changes around a vertical inductive sensor.

a. Model: Nivomatic (Telemac)

b. Manufacturer: Telemac
2 Rue Auguste-Thomas
92 600 Asnieres, France
(marketed by)
Roctest, Inc.
7 Pond Street
Plattsburgh, NY 12901
(Phone) (518) 561-3300

c. Pricing: $6,500.00 including 2 pots and readout

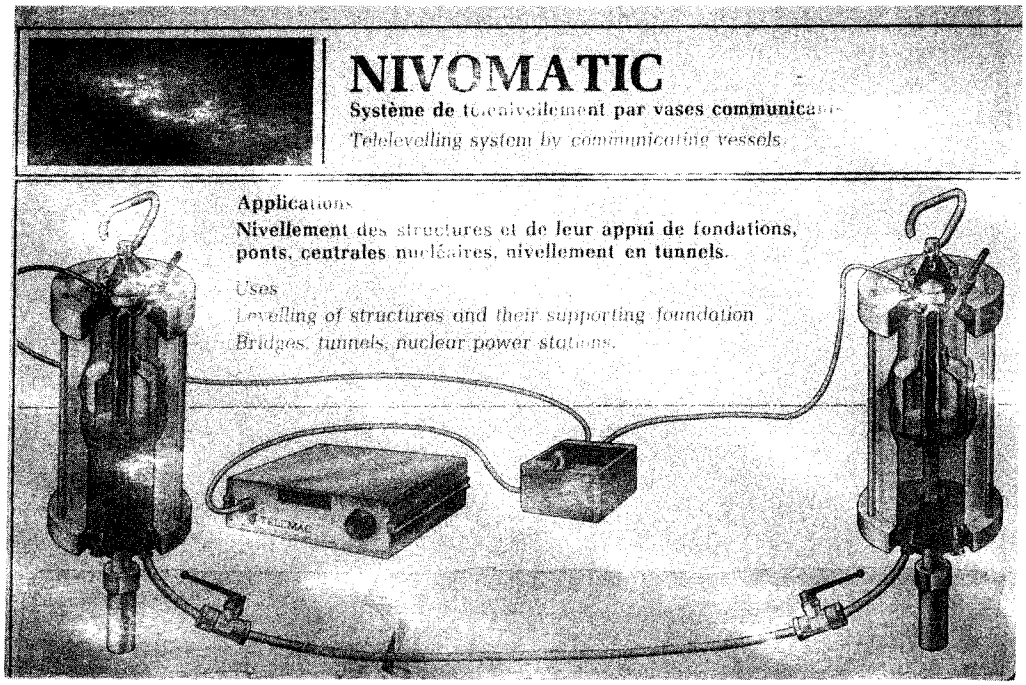

NIVOMATIC (PHOTO COURTESY OF TELEMAC)

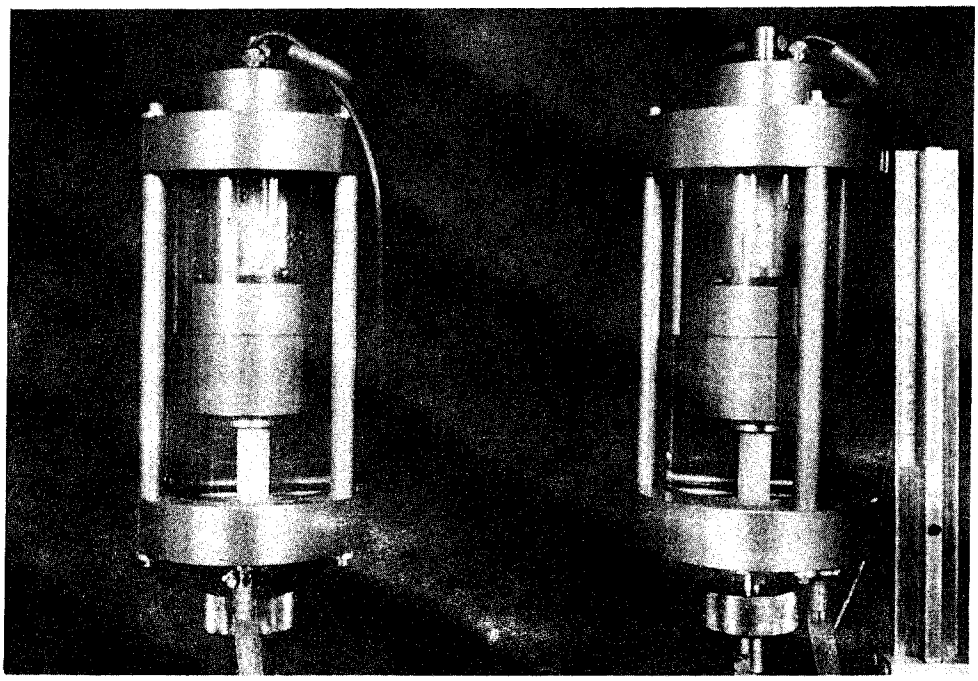

NIVOMATIC LEVELING POTS (PHOTO COURTESY OF TELEMAC)

d. Operation: The change in level of the two floats in the two containers, which are connected by a Rilsan plastic tube, is measured by a differential induction variation device. This arrangement automatically compensates for thermal effects and any accidental loss of liquid. Readings are taken with a lightweight portable set. The frequency output, in hertz, is an almost linear function of displacement. In order to improve accuracy even more, each apparatus is delivered with a tabular chart bringing resolution down to 0.01 millimeter.

e. Prerequisites: Not applicable.

f. Input specifications: Not applicable.

g. Output specifications:

Precision	- ±0.1 mm
Resolution	- 0.01 mm
Max. range	- 100 mm
Base length	- 24 m

h. Interfacing: Requires data acquisition equipment capable of digitizing frequency variations which are a linear function of displacement. The following systems are capable of measuring frequency:

Netpac Acurex, para. IV-14-2
Hewlett-Packard 6108XAA, para. IV-14-5
Hewlett-Packard 3421A, para. IV-14-6
Neff 470, para. IV-14-9
Terra Technology PDL-200, para. IV-14-13
Fluke 2280B, para. IV-15-4
Octapak, para. IV-14-1
REMAC 3100, para. IV-14-14

i. Power requirements and recommendations: Not specified.

j. Environmental conditions: Operating temperature: 0 to 50 °C.

k. Physical specifications: Distance between studs is 24 meters.

l. Reliability: Not specified.

m. Application information: Used for precise measurements of differential settlement within structures and their foundations, and any localized unstable zone.

n. Comments: A special adapter is required to increase maximum height range 200 mm. The Nivomatic provides even quicker, better, and more precise records of convergence movements in tunnels when used in

conjunction with the Disomatic. Also an optional FC 3 DC readout set is available. See part IV Automated Data Processing Equipment, para. IV-7-5, terminals and display units.

Load and Stress

II-9-1. Type and description: Cell, concrete stress. Concrete stress cells are designed to measure stress in mass concrete. The cell consists of two circular stainless steel plates welded together with mercury encapsulated inside them. A tube connects the mercury to a vibrating wire pressure transducer. The plates are embedded in the concrete and any changes in stress in the concrete cause a change in the pressure exerted by the mercury on the pressure transducer. The pressure transducer uses the vibrating string principle which employs changes in an electrical frequency to reflect changes in stress. These frequency signals may be transmitted thousands of feet without loss of accuracy caused by cable resistances or imperfections. Geokon and several other manufacturers make data loggers that can remotely and automatically monitor vibrating string devices.

a. Model: Model 4800C

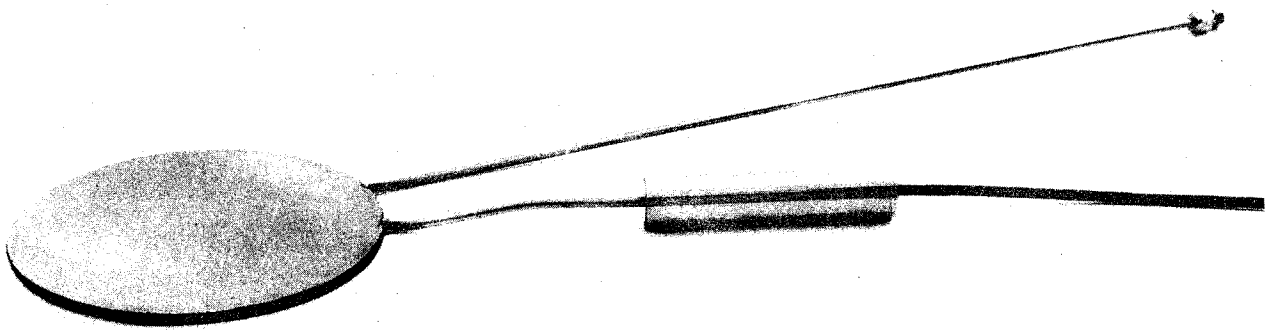

STRESS CELL, MODEL 4800C (PHOTO COURTESY OF GEOKON INC.)

b. Manufacturer: Geokon, Inc.
7 Central Ave.
West Lebanon, NH 03784
(Phone) (603) 298-5064

c. Pricing: $480.00 for gage; cable is $0.75 / ft.

d. Operation: This model concrete stress cell consists of two circular stainless steel plates welded together around the periphery and spaced apart by a narrow cavity filled with mercury. A length of high pressure stainless steel tubing connects the cavity to a pressure transducer. External pressures acting on the cell are balanced by an equal pressure induced in the internal fluid. This pressure is converted into an electrical signal by the pressure transducer and transmitted to a remote readout. The pressure transducer for this model is a vibrating wire type. This permits the readout to be located very far away. Concrete stress cells have a 24-in.-long "pinch" or "past stressing" tube to allow mercury to be forced back into the cell after the concrete cures. This ensures good physical contact between the cell and the surrounding concrete. Also, a thermistor may be included in the transducer housing to measure temperature desired.

e. Prerequisites: None.

f. Input specifications: Not applicable.

g. Output specifications: Ranges available (psi): 50, 100, 500, 1000, 3000, and 5000

Overrange capacity:	150% full scale
Accuracy:	.25% full scale
Resolution:	.1% full scale
Thermal effect on zero:	<.05% full scale
Signal output:	1200 - 2000 Hz
Coil resistance:	150 ohms

h. Interfacing: This model may be monitored remotely and automatically by any data logger that is equipped to handle vibrating wire devices. The following systems are capable of making measurements from vibrating wire gages:

Netpac Acurex, para. IV-14-2
Telemac CNF-7, para. IV-14-12
Terratrac, para. IV-15-3

i. Power requirements and recommendations: 5-V square wave to excite the electromagnetic coil that plucks the vibrating wire.

j. Environmental conditions: Embedded.

k. Physical specifications:

Transducer housing, diam:	1 in.
Transducer housing, lgth:	6 in.
Weight:	5 lb

l. Reliability: Not available.

m. Application information: This stress cell automatically and accurately measures changes in stress inside a concrete structure and may be located thousands of feet away from the automatic data system with only one cable connected to it. Data sheets with calibration coefficients for each gage are supplied by the manufacturer for use in the calibration of application software.

n. Comments: Other models of concrete stress cells are available with different types of pressure transducers. Among these are the pneumatic type, the semiconductor strain gage, and the resistance strain gage.

II-9-2. Type and description: **Stress meter, concrete.** This concrete stress meter is used to measure compressive stress in concrete structures. It is designed to be embedded in the concrete and to be independent of shrinkage, expansion, or changes in modulus of elasticity of the concrete. The stress meter is a 7-in. diameter plate that has a mercury film at its midthickness and a strain meter sensing element. Any stress applied to the plate is applied to the mercury which influences the strain meter to deflect elastically in direct proportion to the stress.

a. Model: C series

b. Manufacturer: Carlson Instruments
1190-C Dell Ave.
Campbell, CA 95008
(Phone) (408) 374-8959

c. Pricing:

400" model, C-400	$630.00
800" model, C-800	$630.00
1500" model, C-1500	$630.00

d. Operation: The meter consists essentially of a 7-in. diameter plate with a strain meter sensing element mounted on one face. The plate has a mercury film at its midthickness and a flexible rim. Any stress applied through the plate is also applied to the mercury film. The mercury is in contact with the more flexible center portion and deflects it elastically in direct proportion to the intensity of stress. The measurement unit is a small, elastic wire strain meter that measures the change in length caused by the deformation of the mercury film, and also the temperature. The strain meter uses two coils that vary in electrical resistance when stressed. The ratio of the resistances of the coils yields a stress measurement while the sum of the resistances yields a temperature measurement. The sensing element is isolated from the concrete by being protected by a metal shield tube covered with PVC tubing. The unit comes with 30 in. of 16 AWG cable for splicing to another cable.

e. Prerequisites: None.

f. Input specifications: Not applicable.

g. Output specifications:

	C400	C800	C1500
Range (psi):	400	800	1500
Resolution (psi):	3	5	10
Resolution (temp.):	.1	.1	.1

h. Interfacing: This stress meter may be monitored by any data acquisition system (DAS) that can measure resistances. However, the DAS should also be capable of numerically calculating the ratio and the sum of the resistances measured and convert these quantities into an engineering form that is degrees or microstrain.

The following systems are capable of making measurements from Carlson meters:

Netpac Acurex, para. IV-14-2
Colorado Data Systems, para. IV-14-3
Hewlett-Packard 6108XAA, para. IV-14-5
Hewlett-Packard 3421A, para. IV-14-6
Neff 470, para. IV-14-9
Solartron 3595, para. IV-14-10
Quantrol, para. IV-14-11
Terra Computer, para. IV-14-13
Autodata Acurex, para. IV-15-1
Terratrac, para. IV-15-3
Fluke 2280B, para. IV-15-4

i. Power requirements and recommendations: None.

j. Environmental conditions: Embedded.

k. Physical specifications:

	C400	C800	C1500
Modulus of elasticity (psi):	$2x10^6$	$4x10^6$	$6x10^6$
Effective area (sq in.):	35	35	35
Weight (lb):	6.7	6.7	6.7

l. Reliability: Not available.

m. Application information: This stress meter for concrete is used to measure compressive stress in concrete structures. This instrument may be automated by a data acquisition system that is capable of measuring resistances. This system must be able to take the ratio and the sum of these resistances to get the data into a usable form. Also, since precision resistances are being measured, cable length and resistance must be considered. Data sheets with calibration coefficients for each gage are supplied by the manufacturer for use in the calibration of application software.

n. Comments: None.

II-9-3. Type and description: Stress meter, vibrating wire. This stress meter is an instrument used to measure stress changes in concrete and rock. The stress meter is installed in boreholes up to 100 feet long and its construction allows it to be waterproof, corrosion resistant, and suitable for automatic

remote reading. The instrument uses the vibrating wire principle to transmit changes in stress. This model transmits changes in an electrical frequency to reflect changes in stress. These frequency signals may be transmitted thousands of feet without loss of accuracy caused by cable resistances and imperfections. Geokon and several other manufacturers make data loggers that remotely and automatically monitor vibrating string devices. The orientation of the vibrating wire with respect to the loading platens gives the gage a high initial sensitivity coupled with a virtually unlimited stress range. Installation procedures allow for the gage to be wedged into place at much higher preloads than most other gages. A thermistor is optionally available for the gage if temperature measurements are desired.

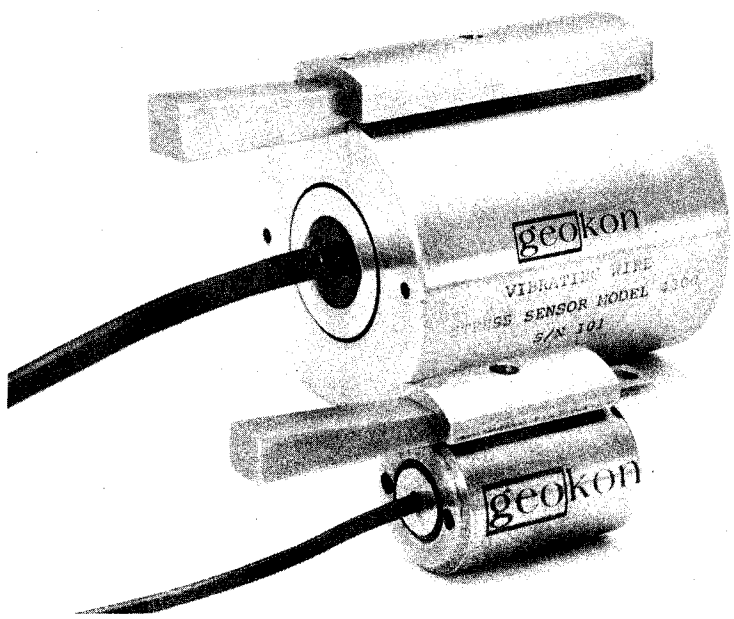

STRESS METER, MODELS 4300-1 AND -3 (PHOTO COURTESY OF GEOKON)

a. Model: Geokon 4300

b. Manufacturer: Geokon, Inc.
7 Central Ave.
West Lebanon, NH 03784
(Phone) (603) 298-5064

c. Pricing: $240.00 for gage; cable is $0.35 per ft.

d. Operation: This stress meter consists essentially of a high strength steel proving ring wedged tightly across one diameter inside a borehole drilled into the concrete or rock. The distortion of the proving ring, caused by changing rock or concrete stress, is measured by means of a vibrating wire that is tensioned across another diameter. Changes in rock or concrete stress cause changes in the resonant frequency of vibration of the tension wire, and the two are related by means of calibration data supplied with each stress meter. The instrument may be remotely and automatically monitored by any data logger capable of handling vibrating string instruments. Stress meters are installed in boreholes up to 100 feet long by means of a setting tool which is used to drive a wedge so that the platen is expanded against the side of the borehole. This installation procedure permits the gage to be wedged into place at a much higher preload than older types of gages.

e. Prerequisites: None.

f. Input specifications:

	Model 4300-1	Model 4300-3
Range in compression:	10,000 psi	10,000 psi
Range in tension:	500 psi	500 psi
Sensitivity*:	2-10 psi	2-10 psi
Accuracy:	2% FS	2% FS
Borehole diameter:	1.450-1.545"	2.9-3.05"
Borehole depth (max.):	100 ft	100 ft

*depending upon rock modulus

g. Output specifications: Not applicable.

h. Interfacing: The model 4300 may be monitored remotely and automatically by any data logger capable of handling vibrating wire instruments. The following systems are capable of making measurements from vibrating wire gages:

Netpac Acurex, para. IV-14-2
Telemac CNF-7, para. IV-14-12
Terratrac, para. IV-15-3

i. Power requirements and recommendations: Vibrating wire must be plucked by an electromagnetic coil which is excited by the data acquisition system.

j. Environmental conditions: Operating temperatures are from -30 to 65 ^{o}C.

k. Physical specifications:

Dimensions(*l* x dia.):	Model 4300-1	1.625in. x 1.125in.
	Model 4300-3	3.0in. x 2.5in.
Weight:	Model 4300-1	1 lb
	Model 4300-3	4 lb

l. Reliability: Not available.

m. Application information: The model 4300 vibrating wire stress meter may automatically and accurately measure changes in stress of concrete or rock formations that are located thousands of feet away from an automatic data system with only one cable connected to it. Data sheets with calibration coefficients are supplied by the manufacturer for use in calibration of application software.

n. Comments: The ease of installation and availability of commercial systems to monitor it automatically make this instrument suited for retrofitting concrete stress measurements for an automatic data acquisition system. This instrument comes in two models: model 4300-1 and model 4300-3. These models are basically the same, except for physical dimensions and their respective borehole diameters.

II-9-4. **Type and description**: **Pressure cell, earth, vibrating wire.**

a. Model: P-100/P-105

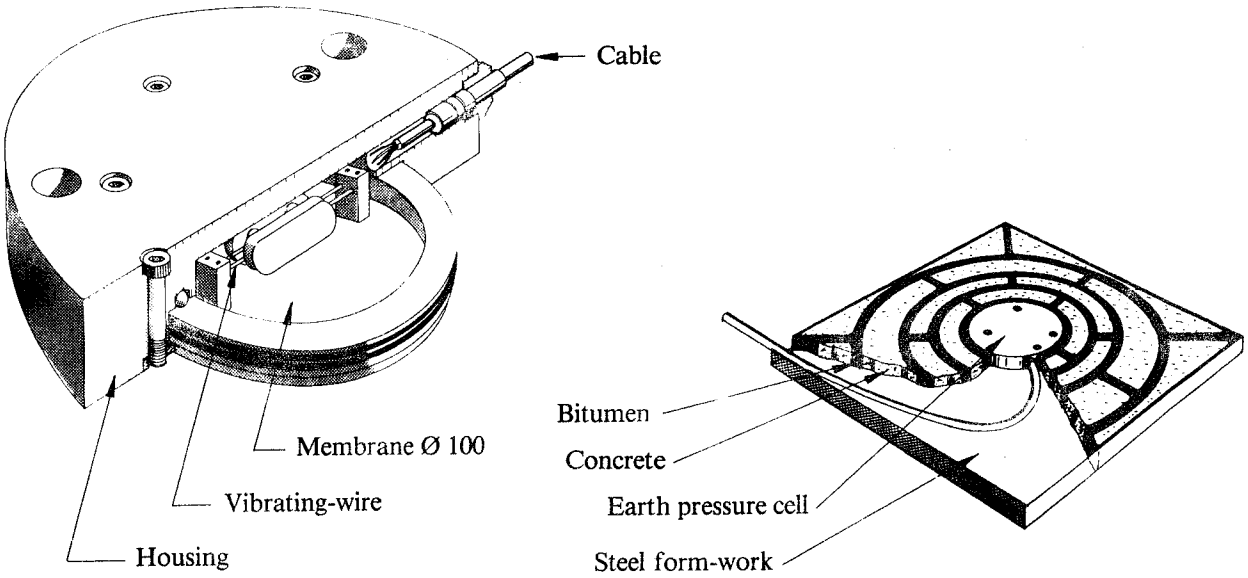

EARTH PRESSURE CELL (PHOTO COURTESY OF GEONOR)

b. Manufacturer: Geonor A/S P.O. Box 99
ROA-OSLO 7
Norway
(marketed by Roctest, Inc.)
7 Pond Street
Plattsburgh, NY 12901
(Phone) (518) 561-3300

c. Pricing: Not available.

d. Operation: The cell is mounted vertically or horizontally in the media. When an external pressure is applied to the membrane to which the stretched vibrating-wire is rigidly attached, it causes a change in tension in the wire due to the deflection frequency of vibration. Consequently, the change in the natural frequency of the gage-wire vibrations is a measure of the change in external pressure acting on the membrane surface. The frequency signal is transmitted by the electrical cable to a read out instrument. The change in earth pressure acting on the membrane surface is proportional to the difference of the squared frequency of vibration for the corresponding pressures.

e. Prerequisites: Requires a vibrating wire data acquisition system to excite the instrument.

f. Input specifications: P-100 (0-30 bar) P-105 (0-50 bar)

g. Output specifications

Model:	P-100	P-105
Linearity:	1% FR	1% FR
Frequency:	1000-2000 Hz	1000-2000 Hz
Freq. span:	600-1000 Hz	600-1000 Hz
Calibrat.:	Individual with 10% FR steps.	

h. Interfacing: Vibrating wire data acquisition system and loggers. The following systems are capable of making measurements from vibrating wire gages:

Netpac Acurex, para. IV-14-2
Telemac CNF-7, para. IV-14-12
Terratrac, para. IV-15-3

i. Power requirements and recommendations: Not specified.

j. Environmental conditions: Temperature range: -30 to +50 °C.

k. Physical specifications: SIS 2324 stainless steel.

l. Reliability: Long term stability, rugged construction, reliable signal transmission, inherent redundancy.

m. Application information: P-100 used to measure total pressure or pore pressure (filter required) acting on different kinds of walls. P-105 transducer is widely used in earth/rock-fill dams to measure earth pressure. The P-105 transducer is not vented to atmosphere, hence variations in atmospheric pressure should not be ignored at low total pressures.

n. Comments: The pressure cells can be used with Geonor's Model P-520F display unit, Micrologger, or 2-8 channel frequency logger.

II-9-5. Type and description: Cell, vibrating wire total pressure. This total pressure vibrating wire cell has a thin hydraulic flat jack and rigid connecting tubing.

a. Model: HCV/819a

b. Manufacturer: Telemac
2 Rue Auguste-Thomas 92600
Asnieres, France
(marketed by)
Roctest, Inc.
7 Pond Street
Plattsburgh, NY 12901
(Phone) (518) 561-3300

c. Pricing: $1,000.00

d. Operation: The cell is placed in the foundations and linings of tunnels. The vibrating wire pressure cell is connected to the hydraulic flat jack by a rigid steel tubing 2 mm X 6 mm in diameter. In order to separate the sensor from the flat jack and eliminate the modification of the stress field around it, the tubing has a minimum length of 0.5 m.

The assembly is a sealed instrument filled under a vacuum with deaerated oil. All total stress variation on the flat jack is transmitted to the vibrating wire sensor by a variation of the oil pressure. To separate the effective stress of the total stress, it is necessary to associate, near the Telemac HCV total pressure cell, a vibrating wire pore pressure cell.

e. Prerequisites: Vibrating wire data acquisition equipment.

f. Input specifications: Not applicable.

g. Output specifications: 0 to 5, 0 to 10, and 0 to 20 bars. Accuracy $\pm 5 \times 10^{-3}$ of the mean. Resolution: $\pm 2.5 \times 10^{-4}$ of measuring range.

h. Interfacing: This model may be operated and monitored automatically by any data logger equipped to handle vibrating wire type gages. The following systems are capable of making measurements from vibrating wire gages:

Netpac Acurex, para. IV-14-2
Telemac CNF-7, para. IV-14-12
Terratrac, para. IV-15-3

i. Power requirements and recommendations: Vibrating wire is excited by regular impulses to the signal pickup solenoid.

j. Environmental conditions: -20 to 50 °C operating range.

k. Physical specifications: 350 mm diam. X 10 mm thick
250 mm diam. X 8 mm thick
Constructed of anticorrosion-treated steel.

l. Reliability: Not specified.

m. Application information: The Telemac model HCV pressure cell is designed to monitor total pressure in soils and boundary layers and contact pressure on structural linings of tunnels and foundations.

n. Comments: None.

Pore Pressure

II-10-1. Type and description: **Cell, pore pressure.** The Carlson pore pressure cell is a device that measures the pressure of the water that is contained in granular material such as soil. The device uses a porous disk to hold back the soil or other granular material from the sensing device. The sensing device is the same element that is used for stress meters. Consequently, the device also measures temperature as well as pore pressure.

a. Model: P series

b. Manufacturer: Carlson Instruments
1190-C Dell Ave.,
Campbell, CA 95008
(Phone) (408) 374-8959

c. Pricing: Models P-25, P-50, P-100, and P-200 are priced at $420.00 each.

d. Operation: This series of pore pressure cells is designed to measure the pressure in the pores of any porous material. It does this by allowing the water pressure to pass through a sintered stainless steel disk to an internal diaphragm while holding back the pressure due to other forces. The water pressure causes a very small deflection of the internal diaphragm. The deflection is measured with the same sensing element as used in the stress meters. This element uses two varying resistances to give a measure of strain (pressure) and temperature. The ratio of the resistances gives a measure of strain (pressure) while the sum of the resistances gives a measure of temperature. The meter is supplied with 30 inches of 16 AWG cable for splicing to another cable.

e. Prerequisites: None.

f. Input specifications: Not applicable.

g. Output specifications:

	P-25	P-50	P-100	P-200
Range (psi):	25	50	100	200
Resolution (psi)	.1	.2	.4	.8
Resolution (temp ^{o}F)	.1	.1	.1	.1

h. Interfacing: The pore pressure cell may be monitored by any data acquisition system that can measure resistances. However, the DAS should also be capable of numerically calculating the ratio and the sum of the resistances measured and convert these quantities into engineering units. The following systems are capable of making measurements from Carlson meters:

Netpac Acurex, para. IV-14-2
Colorado Data Systems, para. IV-14-3
Hewlett-Packard 6108XAA, para. IV-14-5
Hewlett-Packard 3421A, para. IV-14-6
Neff 470, para. IV-14-9
Solartron 3595, para. IV-14-10
Quantrol, para. IV-14-11
Terra Computer, para. IV-14-13
Autodata Acurex, para. IV-15-1
Terratrac, para. IV-15-3
Fluke 2280B, para. IV-15-4

i. Power requirements and recommendations: Not available.

j. Environmental conditions: Embedded.

k. Physical specifications:

	P-25	P-50	P-100	P-200
Plate diameter (in.)	2.75	2.75	2.75	2.75
Height (in.)	5.9	5.9	5.9	5.9
Weight (lb)	2.25	2.25	2.25	2.25

l. Reliability: Not available.

m. Application information: The pore pressure cell is used to measure the water pressure in the pores of a granular material such as soil. This instrument may be automated by a data acquisition system that is capable of measuring resistances. This system must be able to take the ratio and the sum of these resistances and put the data in a usable form. Also, since precision resistances are being measured, cable length and resistance must be considered. Data sheets with calibration coefficients for each gage are supplied by the manufacturer for use in the calibration of application software.

n. Comments: None.

II-10-2. **Type and description: Transducer, pore pressure, water.** This unit is a single crystal silicon diaphragm with a

fully active strain gage bridge diffused into the surface. To resist the effective stress of the soil, a porous filter plate or stone is placed in front of the diaphragm. The transducers are miniature, rugged, and have a fast response.

a. Model: PDCR 81

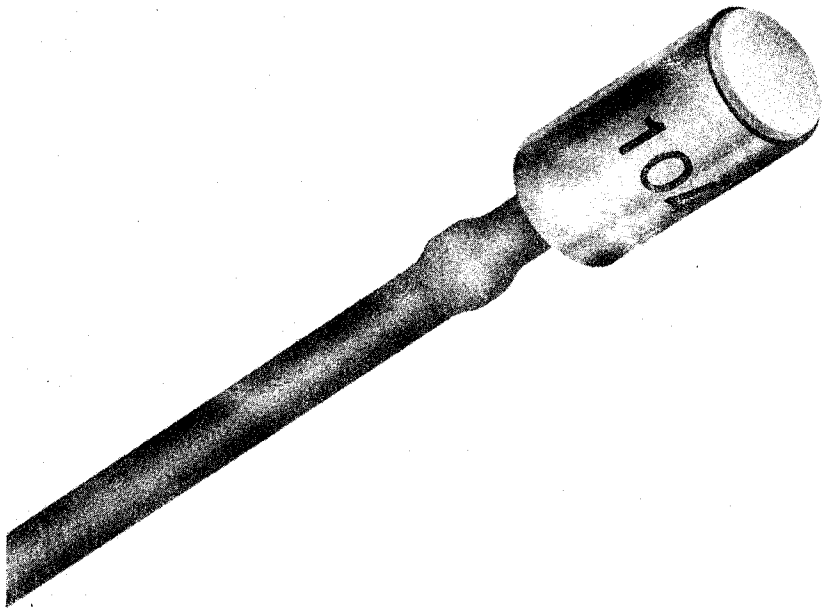

TRANSDUCER, PDCR 81 (PHOTO COURTESY OF DRUCK, INC.)

b. Manufacturer: Druck, Inc.
Miry Brook Road
Danbury, CT 06810
(Phone) (203) 792-8981

c. Pricing: $495.00 each for all pressure ranges

d. Operation: Output varies proportional to the pressure.

e. Prerequisites: Unit requires an excitation voltage of 5 Volts DC or AC, a maximum of 10 V. Signal conditioning and amplification are required since the output levels are less than 75 mV for all ranges of pressure transducers.

f. Input specifications: The following transducer barometric ranges are available: 75 mbar, 350 mbar, 1, 3, 7, 15, and 35 bar gages. Other intermediate

pressure ranges are available on request. Input impedance = 1000 ohms.

g. Output specifications: Output impedance is 1000 ohms nominal for quoted performance. Combined nonlinearity and hysteresis is ±0.2% B.S.L. Zero pressure offset is <±10mV. Thermal sensitivity shift is ±0.2% FSO/°C typical. Thermal zero shift is ±0.05% FSO/°C. Output voltage is 15mV for 75-mbar, 35mV for 350-mbar, 50mV for 1-bar, and 75mV for 3-bar, and above ranges, with a 5-V excitation. Higher outputs are available.

h. Interfacing: Unit requires signal conditioning and amplification for use with data acquisition equipment. The following systems are capable of making measurements from strain type gages which require full, half, or quarter bridge completion circuits:

Colorado Data Systems, para. IV-14-3
Hewlett-Packard 3054, para. IV-14-4
DASCON-1, para. IV-14-7
DASH-16, para. IV-14-8
Neff 470, para. IV-14-9
Solartron 3595, para. IV-14-10
Quantrol, para. IV-14-11
Telemac CNF-7, para. IV-14-12
Terra Technology PDL-200, para. IV-14-13
Terratrac, para. IV-15-3

i. Power requirements and recommendations: 5 V AC or DC, with 10 V being the maximum.

j. Environmental conditions: Operating temperature range of -20 to 120 °C. Mechanical shock of 1000 g for 1 msec, maximum.

k. Physical specifications: Diameter: 7 mm. Head length: 14mm. Cable length: 5 meters. Weight: 30 g, which includes integral Teflon vented cable.

l. Reliability: Solid-state, shock resistant microcircuitry make these transducers ideal for harsh environments.

m. Application information: With its flexible lead, the device is small enough to be easily implanted in soil specimens or may even be used in a centrifuge model earthquake. These units also have uses in civil engineering applications. Data sheets with calibration coefficients for each gage are supplied by the manufacturer for use in the calibration of application software.

n. Comments: Devices may be specified with or without porous plates so that users may fit and replace their own. Up to 5000-psig transducers may be provided by custom designing the diaphragm.

II-10-3. **Type and description: Cell, pore pressure, vibrating wire.**

a. Model: M-600, 600a, 603, S-411

b. Manufacturer: Geonor
A/S P.O. Box 99
ROA-0701 OSLO 7
Norway
(marketed by)
Roctest, Inc.
7 Pond Street
Plattsburgh, NY 12901
(Phone) (518) 561-3300

c. Pricing: Not available.

d. Operation: The basic principle of the vibrating-wire transducer is that the change in natural frequency of a stretched wire depends on the change of the tension in the wire. In this instrument, one end of the gauge-wire is attached to the center of the circular membrane; the other end is secured to the top of the transducer housing.

A fluid pressure applied to the membrane causes a deflection of the membrane. Consequently the tension in the gage-wire and its resonant frequency of vibration are changed. For an increase in fluid pressure, the frequency of vibration of the gage-wire is lowered and vice versa. Thus the frequency of the gage-wire is a measure of the deflection of the membrane, and in turn, a measure of the pressure acting on the membrane. The difference in the square of the frequencies is proportional to the pressure change.

e. Prerequisites: Vibrating wire data acquisition system or frequency indicator.

f. Input specifications:
Model M600/a (2, 4, 6, 10, 16, 20 bar)
M603 (2, 4, 6) S-411 (2-60 customer spec.)

g. Output specifications:
Model: M600/600a M-603 S-411
Accuracy: less than 1% for all models
Resolution: 0.1 or optional 0.01 for all models

h. Interfacing: Requires vibrating wire data acquisition system for excitation. The following systems are capable of making measurements from vibrating wire gages:

Netpac Acurex, para. IV-14-2
Telemac CNF-7, para. IV-14-12
Terratrac, para. IV-15-3

i. Power requirements and recommendations: None specified.

j. Environmental conditions: -20 to 60 °C for all models.

k. Physical specifications:
O.D. 32 x 305 mm for models 600/603
O.D. 32 x 338 mm for model 600 a
O.D. 78 x 325 mm for model S-411

Material in housing/membrane: ferromanganbronze for all models, except for the S-411 which uses UHB44.

l. Reliability: No signal losses in cable, long-term stability, not affected by moisture.

m. Application information: Installed in embankments (rock-earthfill dams, etc.), but may also be used in borehole applications.

n. Comments: The 600 series transducers can be delivered with sintered bronze filter (standard), high air entry resistance filter, or epoxy filter. The S-411 piezometers are protected against induced overvoltage by special Transzorb diodes.

II-10-4. Type and description: **Piezometer, vibrating wire.** This instrument uses a stainless steel electron beam-welded diaphragm connected to a stainless steel end block by a tensioned vibrating wire.

a. Model: PWS, PWP

b. Manufacturer: IRAD/GAGE, Division of Klein Assoc., Inc.
Klein Drive
Salem, NH 03079
(Phone) (603) 893-6131

c. Pricing: PWS - $680.00; PWP - Available on request.
Cable is $0.51 / ft.

d. Operation: As the water exerts pressure on the diaphragm, the resulting deflection changes the resonant frequency of the tensioned wire. A coil and magnet assembly built into the gage can vibrate the wire when the piezometer is connected by cable to an IRAD GAGE universal, portable, digital readout unit. The readout supplies an electrical pulse to vibrate the wire and then measures the period of the vibrations.

e. Prerequisites: None.

f. Input specifications: Ranges: 25, 30, 50, 100, 200, 500, and 1000 psi.

g. Output specifications: Resolution is 0.1% of full scale. IRAD GAGE piezometers may be over-pressurized to 200% of rated capacity without permanently affecting reading accuracy. Accuracy is slightly altered above 150% of rated capacity.

h. Interfacing: Compatible with vibrating wire data acquisition equipment. The following systems are capable of making measurements from vibrating wire gages:

Netpac Acurex, para. IV-14-2
Telemac CNF-7, para. IV-14-12
Terratrac, para. IV-15-3

i. Power requirements and recommendations: 500 Hz - 5.5 kHz at 10 V.

j. Environmental conditions: Temperature range: -40 to 140 ^{o}F.

k. Physical specifications:

Length: (PWP) 254mm (PWS) 117mm
Diameter: (PWP) 33mm (PWS) 18mm
Hermetically sealed and evacuated.

l. Reliability: Not available.

m. Application information: For measuring pore pressure. These piezometers are used worldwide for embankments, draw-down tests, underground storage caverns and tunnels, earthen dams, and in the world's largest concrete dam structures.

n. Comments: The ultra-slim [illegible] design lowers installation costs by allowing a small diameter hole to be used.

II-10-5. **Type and description: Cell, pore pressure, vibrating wire.** This pore pressure cell uses a vibrating wire extensometer mounted axially within it. It also uses a porous sintered bronze or ceramic filter which retains solid matter while admitting water to the pressure chamber.

a. Model: CL1 (Telemac)

PORE PRESSURE CELL, CL1 (PHOTO COURTESY OF TELEMAC)

b. Manufacturer: Telemac
2 Rue Auguste-Thomas 92600
Asnieres, France
(marketed by)
Roctest, Inc.
7 Pond Street
Plattsburgh, NY 12901
(Phone) (518) 561-3300

c. Pricing: $950.00; cable: 2PA-13 is $1.60/ft and 2PA-15 is $1.85/ft.

d. Operation: Changes in pressure cause changes in wire vibration frequency.

e. Prerequisites: Data acquisition equipment capable of pulsing the vibrating wire and detecting the resonant frequency. (PC readout set)

f. Input specifications: Not available.

g. Output specifications: 0 to 2, 5, 10, and 20 bar. Other ranges to order. PC readout sensitivity: 1/1000 of range.

h. Interfacing: This model may be operated and monitored automatically by any data logger equipped to handle vibrating wire type gages. The following systems are capable of making measurements from vibrating wire gages:

Netpac Acurex, para. IV-14-2
Telemac CNF-7, para. IV-14-12
Terratrac, para. IV-15-3

i. Power requirements and recommendations: Vibrating wire is excited by regular impulses to the signal pick-up solenoid.

j. Environmental conditions: Not available.

k. Physical specifications: Length - 315 mm, diameter- 40 mm, weight - 2 kg. All steel construction.

l. Reliability: Not available.

m. Application information: Not available.

n. Comments: The model CL1 cells feature automatic temperature compensation obtained by the all steel construction. They are calibrated and delivered complete with individual calibration curves and

integral 4-core, 12mm O.D. cable (two screened pairs plus axial steel core) in lengths as specified with order.

II-10-6. Type and description: **Piezometers, electric, semiconductor, full-bridge strain gage elements.**

a. Model: PE-1000 Basic (electric) and PE-2020 (hydraulic/electric)

b. Manufacturer: Terra Technology
3860 148th Ave. N.E.
Redmond, WA 98052
(Phone) (206) 883-7300

c. Pricing: PE-1000 - $600.00; PE-2020 - $660.00; cable is $1.65 / ft.

d. Operation: The PE-1000 and PE-2020 strain gage piezometers accurately measure soil pore pressure with the convenience of electrical readout. All models are offered with a four-wire interconnecting cable. The data signal is temperature compensated and amplified before being sent from the the sensor. This eliminates the need for costly, six-wire conductors and ensures consistency of data in a multiple installation even though line lengths vary.

e. Prerequisites: None.

f. Input specifications: Pressure ranges: 0-100 psi, 0-300 psi, and 0-750 psi.

g. Output specifications: 10 V full scale. Accuracy = ±1% of full scale.

h. Interfacing: May be connected to automated data processing equipment which has signal conditioning to accept full-bridge type inputs. The following systems are capable of making measurements from strain type gages which require full, half, or quarter bridge completion circuits:

Colorado Data Systems, para. IV-14-3
Hewlett-Packard 3054, para. IV-14-4
DASCON-1, para. IV-14-7
DASH-16, para. IV-14-8
Neff 470, para. IV-14-9
Solartron 3595, para. IV-14-10
Quantrol, para. IV-14-11

Telemac CNF-7, para. IV-14-12
Terra Technology PDL-200, para. IV-14-13
Terratrac, para. IV-15-3

i. Power requirements and recommendations: 12 VDC excitation.

j. Environmental conditions: Not available.

k. Physical specifications: PE-1000 1 in. O.D. X 6 in.
PE-2020 1-3/4" O.D. X 10 in.

l. Reliability: Contains no moving parts to wear or produce errors under conditions of shock or vibration.

m. Application information: These instruments are specifically designed for civil engineering applications that require high accuracy, stability, and reliability.

n. Comments: The PE 2020 has a hydraulic tube connected to the volume between the filter and pressure transducer, allowing flushing of the filter should it become clogged after installation.

Seepage and Leakage

II-11-1. **Type and description:** Flow meter, closed pipe and open channel. Refer to paras. II-17-1 and 2 for a detailed description of these items.

II-11-2. **Type and description:** Logger, weir level. This weir-level logger uses a depth transducer and a hand-held computer as an interrogator.

a. Model: PWL-47

WEIR LOGGER, PWL-47 (PHOTO COURTESY OF GEMS)

b. Manufacturer: Geotechnical Engineering and Mining Services, Inc.
190 West Rafferty Gardens, Unit 8
Littleton, CO 80120
(Phone) (303) 794-1912

c. Pricing: $2,728.00 for up to 8 sensors in field packaging

d. Operation: This unit is carried to the weir and the waterproof transducer cable is connected to it. Then an HP-41CX hand-held calculator is connected to the top panel HP-IL connector. The procedure for setting the operating schedule is begun by answering questions displayed on the calculator. The appropriate weir-level conversion to flow algorithms are part of the custom software. When the operator returns to get the data, the calculator is connected to the PWL-47 and the interrogation commences. The accumulated readings are received by the calculator and placed in nonvolatile memory. The operator reschedules the sleep/wake periods for the next series of readings. Lastly, the operator prints the time-stamped readings in the field or in the office.

e. Prerequisites: Unit requires an HP-IL-compatible printer.

f. Input specifications: 4-20 mA high-level signal.

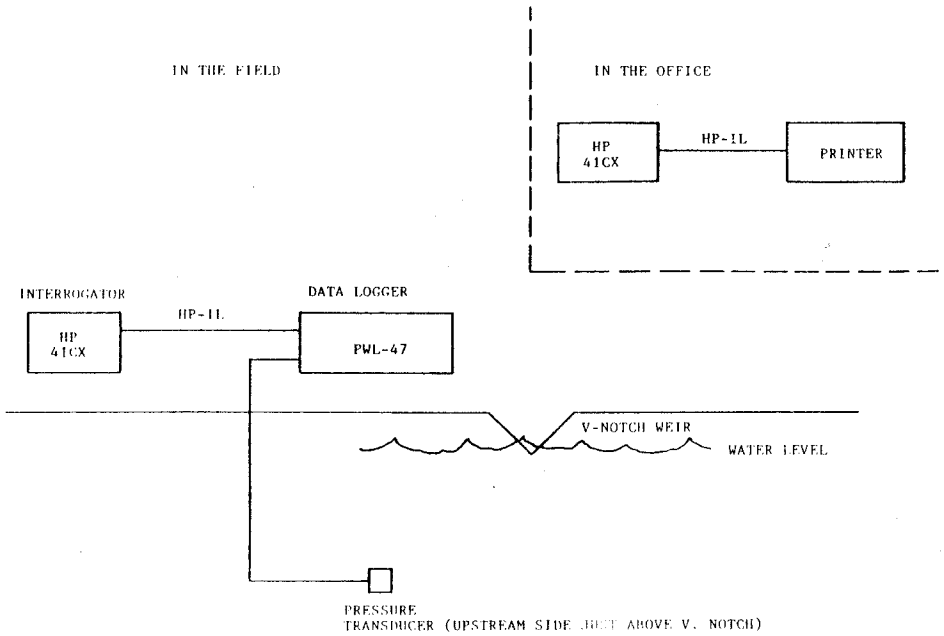

FIGURE 3. GEMS PORTABLE WEIR LOGGER

g. Output specifications: 4-20 mA high-level analog signal. Accuracy: ±1% over the temperature range of 0 to 50 °C. Resolution: ±0.01 ft.

h. Interfacing: Depth sensor is connected to the PWL-47. The PWL-47 connects to data acquisition equipment via a serial HP-IL and an RS-232-C port.

i. Power requirements and recommendations: Battery operated with sufficient power to last from weeks to months in remote, exposed locations.

j. Environmental conditions: Operating temperature of 0 to 50 °C for rated accuracy.

k. Physical specifications: None specified. Unit has waterproof cable.

l. Reliability: Not available.

m. Application information: Depths sensor may be permanently mounted on the weir structure. Unit used at Climax dam in Colorado.

n. Comments: Readings may be selected to occur at 1-min to 1-day intervals with unchanged readings discarded.

Seismic

II-12-1. Type and description: **Accelerograph, digital strong motion.** This device is a self-contained triaxial strong motion accelerograph which converts the analog outputs of three force balance accelerometers in proportional digital values. It then records the digital data onto a four-track magnetic tape cassette.

a. Model: DSA-1

b. Manufacturer: Kinemetrics, Inc.
222 Vista Ave.,
Pasadena, CA 91107
(Phone) (213) 795-2220

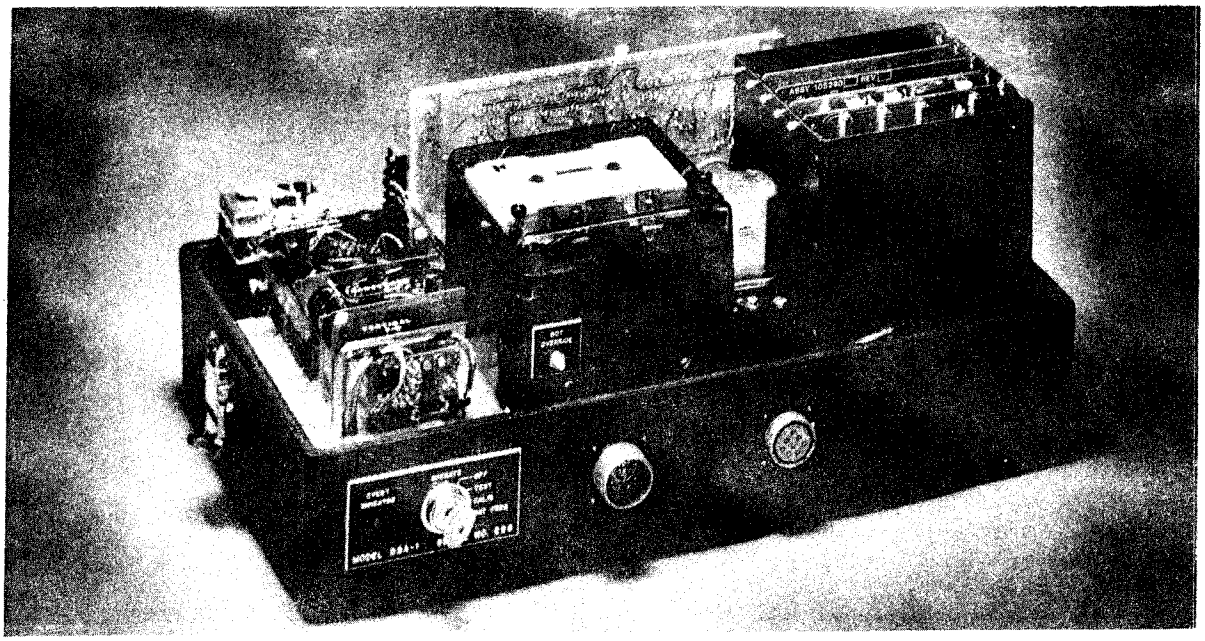

ACCELEROGRAPH, DSA-1 (PHOTO COURTESY OF KINEMETRICS, INC.)

c. Pricing: $4515.00 to $6500.00, with options

d. Operation: The strong motion accelerograph has an adjustable acceleration set point which triggers the unit to start recording data. The data are digitized from each accelerometer into 12 binary bits and recorded onto the cassette tape along with the unit's serial number and a 2-pps time pulse. The recorder uses digital phase encoding with LRCC correction bits to ensure data validity. The internal seismic trigger

may be either vertical or horizontal (or optionally both). A pre-event memory is also an option which allows 2.5 sec of data to be recorded before the event occurs. After six months in standby status, an internal battery provides at least 30 min of recording without recharging. Normally, the float charger keeps the batteries at full charge.

e. Prerequisites: A digital playback system model DS-3 manufactured by Kinemetrics, Inc., is required for transfer of data from tape to a data processing system. Refer to para. IV-6-5 for more information.

f. Input specifications:
Frequency response: DC to 50 Hz
Range: ± 1 g full-scale standard
(optionally available 1/4 g, 1/2 g, and 2 g)

g. Output specifications: The output of this unit is a certified magnetic tape digital cassette, 0.150 in. x 300 ft, with digital phase encoded data on four tracks at 1280 bits / in. The digital resolution of these data is 1 part in 4096.

h. Interfacing: This is a stand-alone unit.

i. Power requirements and recommendations:
Voltage: +12 and -12VDC
Recording current: 300 mA, +12 and -12 V
Battery charger: 110 VAC or 220 VAC

j. Environmental conditions:
Housing: watertight cast aluminum base and cover
Operating temperature: 30 - 130 ^{o}F
Humidity: 100%, RH

k. Physical specifications:
Size: 10 in. x 17 in. x 8.5 in.
Weight: 43 lbs
Mounting: single tie-down bolt (1/4 - 20)

l. Reliability: Not available.

m. Application information: The strong motion accelerograph has an external alarm output (12 VDC to actuate user-supplied alarm device), which alerts the user to any seismic activity. It also is the event which indicates that the cassette tapes should be retrieved from the recorders and played back into the data processing system.

n. Comments: The digital strong motion accelerograph off-loads a large portion of the manual labor involved in transferring data from the recorder to the data processing system. The photographic film system is a less costly method of doing the same job. A savings of $1000 to $2000 per recorder may be achieved. One key factor in making a selection is the frequency of seismic activity. The COE currently uses model SMA-1 manufactured by Kinemetrics, Inc. for this purpose.

II-12-2. Type and description: **Accelerometer, seismic, quartz, piezoelectric.** This unit has a low profile seismic mass and a low noise MOSFET microelectronic amplifier.

a. Model: 393C

b. Manufacturer: PCB Piezotronics, Inc.
3425 Walden Avenue
Depew, NY 14043-2495
(Phone) (716) 684-0001

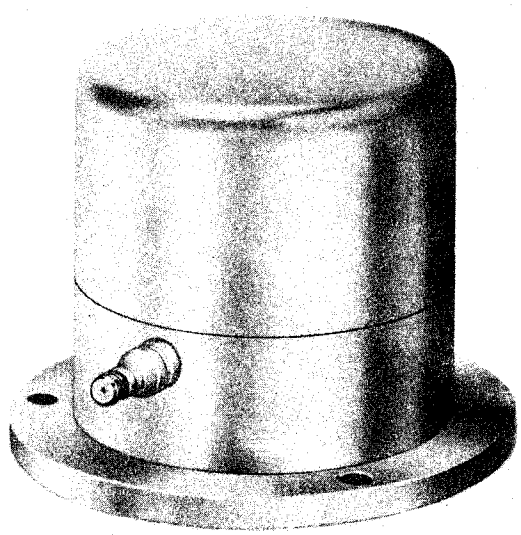

ACCELEROMETER, 393C (PHOTO COURTESY OF PCB PIEZOTRONICS)

c. Pricing: $480.00

d. Operation: A small mass is attached to the quartz element which when accelerated causes a varying voltage across the quartz element. This voltage is applied to the internal isolation amplifier; and then to the coaxial connector where power is supplied and the signal is extracted. The accelerometer may be attached permanently or semipermanently on the structure.

e. Prerequisites: Requires an excitation of +18 to 24 VDC at 2 to 20 mA DC.

f. Input specifications: ±2.5g, 0.025 to 800 Hz.

g. Output specifications: Sensitivity of 1.0 V/g. Linearity of 1% FS. Output impedance of <100 ohms.

h. Interfacing: Direct connection to data acquisition equipment with signal conditioners. Requires low voltage input as well as excitation voltage.

i. Power requirements and recommendations: An excitation voltage of +18 to +24 VDC at 2 to 20 mA DC.

j. Environmental conditions: Shock resistant to 100 g. Temperature range from -100 to +200 °F.

k. Physical specifications: 2.25-in dia and 2.16- in H. Weight - 1000 g. Enclosed in a hermetically welded stainless steel case. Resonant frequency of 3500 Hz.

l. Reliability: Not available.

m. Application information: Senses the vibratory motion of buildings, bridges, foundations, and other large structures induced by operating machinery, vehicles, or earth tremors. May be installed with a central stud or with a 3-hole mounting plate (supplied) which is electrically isolated from the accelerometer case.

n. Comments: The model 393C may be attached to any of the model 480 series power and signal conditioners that are available from PCB Piezotronics.

II-12-3. Type and description: **Geophone, short period seismometer.**

a. Model: L-4C

b. Manufacturer: Mark Products
10507 Kinghurst Dr.
Houston, TX 77072
(Phone) (713) 498-0600
(represented by)
Sprengnether Instruments, Inc.
4567 Swan Avenue
St. Louis, MO 63110
(Phone) (314) 535-1682

c. Pricing: $1,000.00

d. Operation: This instrument operates on the principle of a mechanical movement caused by a seismic event which is converted into a very low frequency signal taken from a coil.

e. Prerequisites: DR200 seismic recorder, refer to para. II-12-4.

f. Input specifications: Suspended mass: 1000 g. Transduction: 7.02 V/in./sec.

g. Output specifications: Coil resistance 5500 ohms. Inductance: 6.05 Henries. Output frequency: 1 ±0.05Hz measured on 200 lb weight at 0.09 in/sec.

h. Interfacing: Any amplifier with a bandwidth of 0.2 to 100 Hz with filter may be used. The output must be either a voltage or current capable of being processed by a data acquisition system. Sprengnether has a model AS-110 high gain amplifier. See para. IV-17-7 for more information. Also if the geophone is located in a remote area, a telemetry VCO model TC-10, discriminator (TC-20), multiplexer (TC-30), and RF transmitters (TX-200) and receivers (RX-200) may be used. See telemetry transmission devices paras. IV-19-4 and 5.

i. Power requirements and recommendations: Not applicable.

j. Environmental conditions: Operating temperature: -20 to 140 ^{o}F.

k. Physical specifications: Height: 13 cm; Diameter: 7.6 cm; Weight: 2.15 kg.

l. Reliability: Is designed to eliminate the usual causes of failure in very low frequency geophones, such as spring fatigue, overstress, and instability. It maintains a close frequency tolerance with tilt and temperature, and is transported without requiring clamping of the moving element.

m. Application information: Used to measure short period seismic events.

n. Comments: This instrument may be integrated with other manufacturers' signal conditioners and data acquisition systems, but Sprengnether's basic system consists of the L-4C, PTS-3, or PTS-6 (telemetry signal conditioner). The PTS-3 includes the AS-110, TC-10, and TC-205. The PTS-6 includes (3) AS 110, (3) TC-10, a TC-30, and a TC-205. The system also includes a TX-200 and an RX-200 FM transmitter/receiver. On the receiving side, either after the signal conditioning or telemetry system, is the DR-200 seismic recorder which includes its own signal conditioner. From there, the data stored on cassette may be played back on the model 250/260 playback units. See Magnetic Tape Systems, para. IV-6-9 for their descriptions.

II-12-4. Type and description: **Accelerometer, teleseismic, microearthquake, or strong motion.**

a. Model: DR-200

b. Manufacturer: Sprengnether Instruments, Inc.
4567 Swan Avenue
St. Louis, MO 63110
(Phone) (314) 535-1682

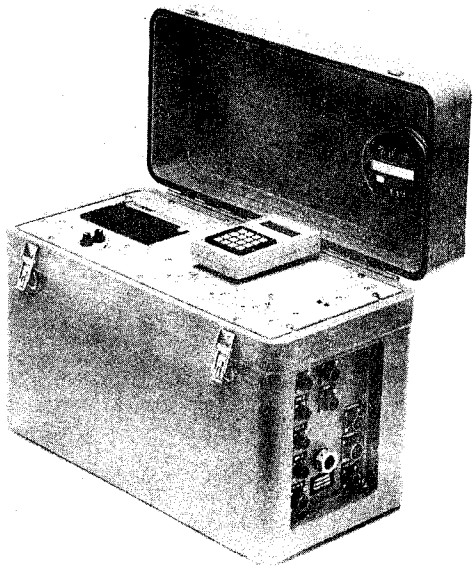

ACCELEROMETER, DR-200 (PHOTO COURTESY OF SPRENGNETHER)

c. Pricing: $10,400.00

d. Operation: Signals are applied to one to four channels. Three channels of low noise signal conditioners are standard (four optional). The fourth recording channel has five different inputs that may be selected via software to feed the fourth recording channel. These may be an additional sensor component, BCD radio time code signals, etc. With the optional MTU preprogramming module, various different inputs may automatically be switched in and out for recording at various times. In the standard module, the selected auxiliary input is also connected to the fourth channel on the trigger card. Optionally, the fourth trigger channel may be directly wired to a separate input to allow independent trigger input and auxiliary channel recording. This permits use of external methods, such as another instrument, remote radio trigger, etc.

Multimode triggering versatility is one of the hallmarks of the model DR-200 design. A separate microprocessor for the triggering system allows sophisticated triggering performance unaffected by the other systems of the DR-200. The system may be instructed to consider trigger signals from channel one only, channels one and two only, or up to all four channels in two logic modes. In the "AND" logic mode, a positive trigger signal from all the active trigger channels must be received before recording commences. In the "OR" logic mode, a positive trigger signal from any one of the active trigger channels initiates recording. Additionally, these group trigger signals must be received within a "time window" that is effectively the same length as the selected pre-event memory. While not as sophisticated as Sprengnether's Q-LOG and MDR state-of-the-art network systems, this capability allows the model DR-200 to be used as an economical central recorder for small telemetered networks.

Further triggering flexibility is provided by the optional preprogramming module, which allows pre-setting multiple times for starting and stopping recording or enabling and disabling the internal trigger. This aids applications when recording known sources or avoiding recording during known periods of high cultural noise.

The menu-driven parameter selection allows the user to control the signal conditioners and 7-pole anti-alias filter with adjustable corner frequencies.

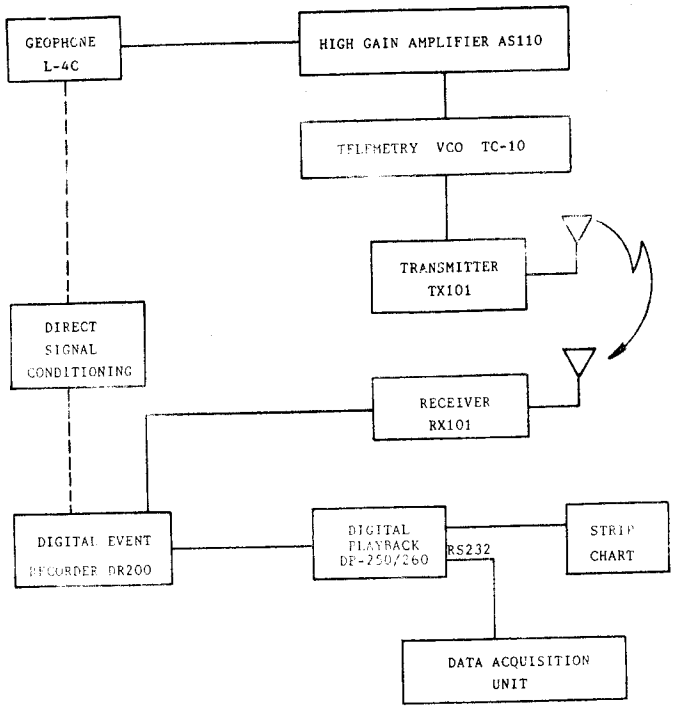

FIGURE 4. DR-200 RECORDER SYSTEM BLOCK DIAGRAM

e. Prerequisites: Model DP-250 playback unit, or DP-260 field playback unit. Optional DAC-300 laboratory playback and editing computer. Refer to para. IV-6-9.

f. Input specifications: VDC: ±.038 mV to ±5 V with gains of 0, 12, 24, and 36 dB; 800 samples / second. Signal conditioners: differential input; noise: 1.7 uV P-P. Frequency filter: DC or 5 sec 1 pole.

g. Output specifications: Tape: 4-track with automatic track switching and rewind. Density of 1600 bpi, nominal. Record speed: 10.0 inches per sec. Each sample is recorded as a 16-bit datum. (1 sync, 1 time, 2 gain bits, 12 data bits) 300-ft cassette, 1.2 X 10^6 samples per cassette. 70 min recording time @ 100 SPS X 3 chan.

h. Interfacing: Not available.

i. Power requirements and recommendations: 12-V rechargeable gel-cells, 220 mA @ 12 V.

j. Environmental conditions: Operating temperature: 0 to 50 °C noncondensing. Housing is waterproof to a submerged depth of three feet.

k. Physical specifications: Aluminum case: 10 X 19.5 X 14.5 in.; Weight: 37 lb.

l. Reliability: Not available.

m. Application information: Earthquake monitoring.

n. Comments: See DP-250/260 playback unit; refer to para. IV-6-9.

II-12-5. Type and description: **Accelerograph, digital strong motion.** This device is a self-contained triaxial strong motion accelerograph which converts the analog outputs of three force balance accelerometers in proportional digital values. It then records the digital data onto a two track magnetic tape cassette.

a. Model: DCA 333

b. Manufacturer: Terra Technology Corp.
3860 148th Ave., N.E.
Redmond, WA 98052
(Phone) (206) 883-7300

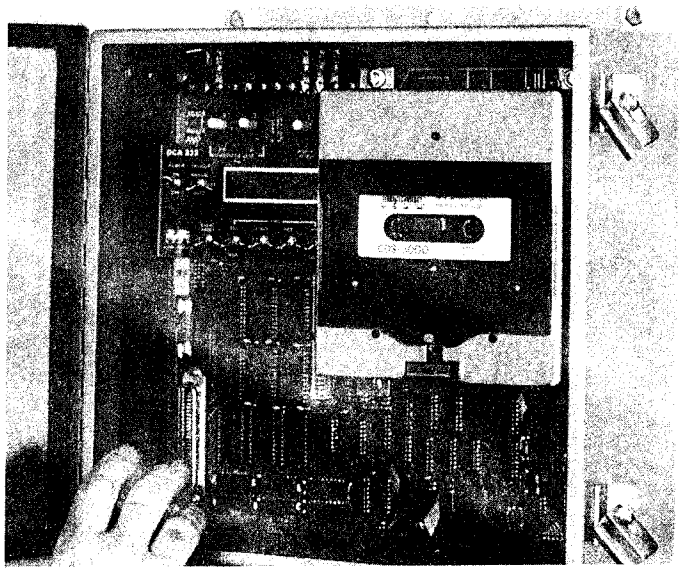

ACCELEROGRAPH, DCA 333 (PHOTO COURTESY OF TERRA TECHNOLOGY)

c. Pricing: $3495.00

d. Operation: The strong motion accelerograph has an adjustable acceleration set point which triggers the unit to start recording data. The data are digitized from each accelerometer into 12 binary bits and recorded onto the cassette tape along with the timing pulses. The recorder uses a self-clocking NRZI data format to prevent record loss due to tape flaws. The internal seismic trigger is omnidirectional. A pre-event memory is selectable from 1.0 to 4.0 sec which allows 1.0 to 4.0 sec of data to be recorded before the event occurred. An internal battery provides a minimum of 5 days quiescent operation plus event record. An external line converter is available.

e. Prerequisites: A digital playback system model SMR-104 manufactured by Terra Technology Corp., is required for transfer of data from tape to a data processing system. Refer to para. IV-6-10 for more information.

f. Input specifications: Frequency response: DC to 30 Hz, optional 10 Hz to 70 Hz. Range: ±2 g standard, optional ±1/4 g, ±1/2 g, ±1 g, and ±5 g.

g. Output specifications: The output of this unit is a certified digital magnetic cassette tape, 0.150 in. x 300 ft with self-clocking NRZI data stream resynchronized with each sample. Time, event count, and other data are multiplexed into data stream. Data density is 1200 bits/in. and 100 samples/sec/chan.

h. Interfacing: This is a stand-alone unit.

i. Power requirements and recommendations: Voltage: external 10-15 VDC; internal two 6-V sealed 8.0-ampere/hour rechargeable batteries.

j. Environmental condition:
   Housing: NEMA-12 enclosure
   Operating temperature: -10 °F to +140 °F
   Humidity: 0-85%, noncondensing

k. Physical specifications:
   Size: 12 in. x 12 in. x 6 in.
   Weight: 22 lbs
   Mounting: Horizontal or vertical

l. Reliability: Not available.

m. Application information: The digital strong motion accelerograph eliminates a large portion of the manual

labor involved in transferring data from the recorder to the data processing system.

n. Comments: The photographic film system is a less costly method of doing the same job. A savings of $1000 to $2000 per recorder may be achieved. One key factor in making a selection is the frequency of seismic activity. The COE currently uses model SMA-1 manufactured by Kinemetrics, Inc. for this purpose.

Settlement

II-13-1. Type and description: Settlement gage, horizontal, full-profile.

a. Model: Nold Aquaducer

b. Manufacturer: Geotechnical Instruments Ltd.
Station House, Leaming Spa
England CV31 3NR
(Represented by)
Walter Nold Co.
24 Birch Road
Natick, MA 01760
(Phone) (617) 653-1635

c. Pricing: $12,000.00, but manufacturer prefers rental $1,200 per month which includes engineering support.

d. Operation: A one and one-half-inch ID thick-walled PVC pipe is laid into a shallow trench on the ground surface, or at any elevation within the fill, and subsequently covered with fill material. A gage support must be constructed at one or both ends of the PVC pipe, depending upon how the system is to be used. Refer to Figures 5 and 6.

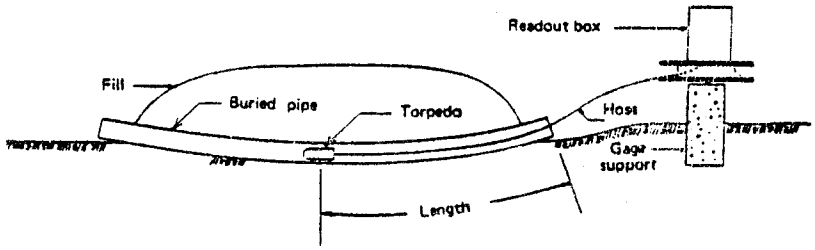

FIGURE 5. INSTALLATION OF NOLD AQUADUCER

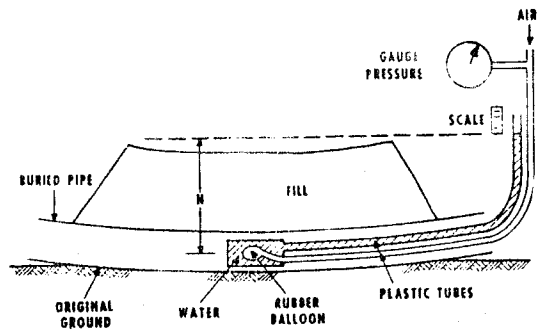

FIGURE 6. OPERATION OF NOLD AQUADUCER

The PVC pipe serves as the length reference with regard to the instrument tubing to be inserted. The readout box, which contains the pressure gage and water level scale (standpipe), is supported by a No. 7 round steel bar embedded in a concrete block. The top of the bar is the surveyed height reference point of the system. The zero marking of the standpipe is at the same level.

In operation, the torpedo is inserted into the PVC pipe for a length as measured by the markers on the hose. The upper surface of the water is opened to atmospheric pressure, and its level is adjusted to the zero mark of the scale by means of a manually operated piston. Through use of a medical-type of squeeze bulb, air pressure is introduced to the system. This causes the balloon to inflate and the water level to rise. Pressure increases until the water level reaches anywhere between 2.5 and 5.0 in. as indicated through means of the eight-inch standpipe scale. A linear relationship exists between the air pressure introduced (to counter the weight of the vertical segment of the fluid) and the water displacement between the stated limits. That is, inches of air pressure is equal to the displacement of water, which is also measured in inches. To obtain the difference in elevation between the top of the No. 7 steel bar and the torpedo, the reading of the water level at the standpipe is subtracted from the reading of the pressure gage, both in terms of inches. No further calculation is necessary when the fluid is water. This system does require the use of an antifreeze preparation when subfreezing temperatures occur. The system also requires that the fluid be deaired. That requires a

Nold DeAerator which is sold or rented in conjunction with the Aquaducer.

e. Prerequisites: Nold deaerator or equivalent deaired water system.

f. Input specifications: Not applicable.

g. Output specifications: Settlement of 280 in. or more. Manufacturer's data shows settlement plots up to 4 in. with 1/2-in. resolution.

h. Interfacing: Manufacturer has no electronic means of interfacing, but measurements of pressure may be converted to electronic signals with an appropriate pressure transmitter.

i. Power requirements and recommendations: Not applicable.

j. Environmental conditions: Not specified, but the lower limit is dependent on the fluid freezing point and the upper temperature limit is dependent on the deairing process.

k. Physical specifications: The Aquaducer is made up of the readout box (.093 in. aluminum MIL-T-945A case), the torpedo (brass housing for the latex balloon, which is held in place with tight-fitting 'O' rings), and the water and air carriers which consist of nylon tubes running parallel to each other and held together by means of vinyl electrical tape. Length markings are at 20-ft intervals. Standard stainless steel receptacles of the quick disconnect type are used at the ends of the cable for easy attachment to the readout box, and to splice the two 250-ft lengths of hose together.

l. Reliability: The entire design is simple in nature and quality engineered and constructed. As a result, repair is simple to accomplish.

m. Application information: The Aquaducer may be leased or rented. However, the services of professional engineers are available for those not wishing to purchase the instrument and yet make full use of the instrument capabilities.

n. Comments: The standard hose length is 500 ft, permitting profiles up to 1000 ft to be taken.

II-13-2. **Type and description: Inclinometer, SINCO model 50329.** The horizontal Digitilt inclinometer sensor, model 50329 provides precise data for determining vertical displacement or settlement in embankments, dams, and foundations. This sensor operates in a 3.38-in. OD slope indicator casing, which is horizontally laid in place during fill operations or installed in horizontal boreholes. The whole system consists of the sensor model 50329, an electrical cable marked in either English or metric increments, and a Digitilt readout indicator. The SINCO model 50325 inclinometer is a similar model, but is made to be used in vertical boreholes.

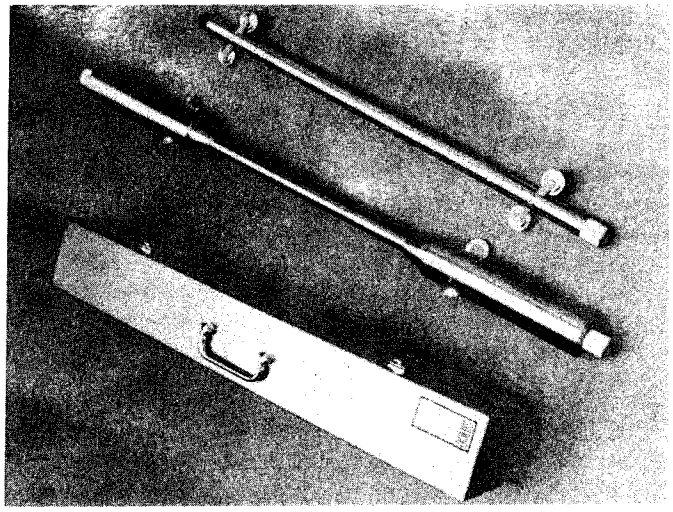

INCLINOMETER (PHOTO COURTESY OF SLOPE INDICATOR CO.)

a. Model: Model 50329

b. Manufacturer: Slope Indicator Co.
Terrametrics
511 Orchard St., Suite 107
Golden, CO 80401
(Phone) (303) 279-7813

c. Pricing: Sensors: $5075.00
Cable: $6.25/ft
Casing: $6.00/ft

d. Operation: The uniaxial sensor, model 50329 has a servo accelerometer in a waterproof housing, mounted in the same axis as the tracking wheels which ride in the

casing grooves. The sensor and indicator are connected with a 0.42-in. diameter cable which carries power and signal. The cable has a stranded steel core to bear pulling stresses and eliminate connector and wire breakage; a heavy waterproof neoprene jacket; and external markings at one-foot or half-meter intervals to aid in depth determination. The grooved Slope Indicator Co. inclinometer casing guides the wheels of the sensor in the direction of measurement and controls sensor orientation in a near vertical position. The measurement process consists of pulling the inclinometer through the borehole while taking data readings at regular intervals. It is recommended that these readings be taken by the Slope Indicator model 50368 recorder-processor-printer (which is described in para. II-7-3) because of its compatibility with standard mini and microcomputers.

e. Prerequisites: None.

f. Input specifications: Not applicable.

g. Output specifications:

	English	Metric
Operating range	±35 °F	±53 °C
Accuracy	± 0.1 in. per 100 ft of casing	±2.5 mm per 30 m of casing
Sensitivity	1:10,000	1:20,000

h. Interfacing: The horizontal Digitilt inclinometer sensor model 50329 may be monitored by most mini- and microcomputers, if the model 50368 RPP (recorder-processor-printer) is used to take the data readings.

i. Power requirements and recommendations: Not applicable.

j. Environmental conditions:

	English	Metric
Temperature Range:	0 to 120 °F	-18 to 49 °C

k. Physical specifications: Not available.

l. Reliability: Not available.

m. Application information: The horizontal Digitilt inclinometer sensor model 50329 is used to determine the vertical heave or settlement in embankments, dams, and foundations. When used with the Digitilt model 50368 (described in para. II-7-3), the data obtained from the sensor may be stored on magnetic tape and entered into most mini- or microcomputers via the EIA

RS-232-C data format for numerical analysis and reduction.

n. Comments: None.

II-13-3. Type and description: Monitor, geophone/hydrophone, Nold Seismitron.

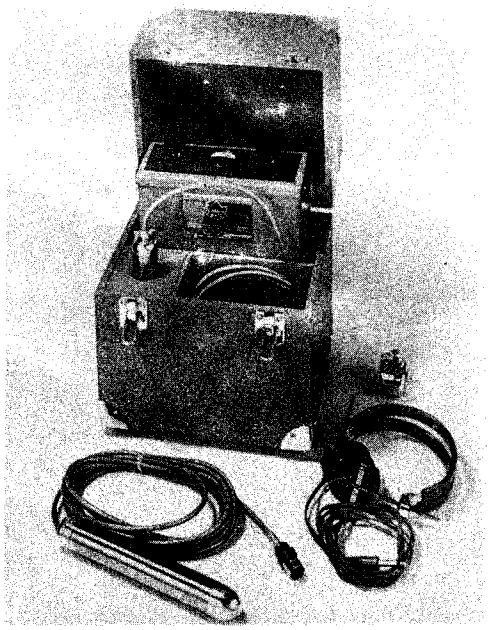

NOLD SEISMITRON (PHOTO COURTESY OF WALTER NOLD CO.)

a. Model: Nold Seismitron

b. Manufacturer: Walter Nold Co.
24 Birch Rd.
Natick, MA 01760
(Phone) (617) 653-1653

c. Pricing: $6,000.00

d. Operation: The geophone is temporarily placed into one of the monitoring holes for a 5- to 10-minute listening period. A doubling rate of rock sounds called microseims (like "clicks") over a 24-hr interval or an extremely high initial count may indicate an imminent failure. By plotting the microseismic rate versus the dated time of monitoring, extrapolation of the graph can reveal a rock slide, fall, or burst in the making,

with sometimes over six weeks of advance warning under ideal circumstances.

e. Prerequisites: None.

f. Input specifications: Not available.

g. Output specifications: Not available.

h. Interfacing: Not possible with this instrument.

i. Power requirements and recommendations: Battery-powered; special battery pack needed to be certified by the Bureau of Mines.

j. Environmental conditions: Not available.

k. Physical specifications: Portable (16 lb), self-contained.

l. Reliability: Field proven for more than 25 years of use in mines and dams throughout the world. Engineered to be long lasting for trouble-free operation in any type of mining environment. Uses vacuum tube technology.

m. Application information: Instant indication of building up of stress in concrete foundation structures.

n. Comments: Units include two geophones and two earphones. Units have been in use for over 30 years.

Strain

II-14-1. Type and description: **Strain gage, vibrating wire.** The Geokon model VK-4100 vibrating wire strain gage is designed to measure strains in steel and concrete structures. It may be installed quickly and easily in the field by means of a spot welder or it may be epoxy-bonded to the surface of either steel or concrete. The VK-4100 has a fully sealed, all stainless steel construction, making it waterproof and highly resistant to corrosion. The gage uses the vibrating wire principle which employs changes in an electrical frequency to transmit changes in strain. These frequency signals can be transmitted thousands of feet without loss of accuracy caused by cable resistances and imperfections. Geokon and several other manufacturers make data loggers that can remotely and automatically monitor vibrating wire devices.

STRAIN GAGE, VK-4100 (PHOTO COURTESY OF GEOKON, INC.)

a. Model: Geokon model VK-4100

b. Manufacturer: Geokon, Inc.
7 Central Ave.,
West Lebanon, NH 03784
(Phone)(603) 298-5064

c. Pricing: $75.00 for gage; cable is $0.35 / ft.

d. Operation: This gage uses the vibrating wire principle. A two-inch length of steel wire is tensioned between two end blocks which are spot-welded or epoxy-bonded to the surface to be measured. The wire is plucked so that it vibrates at its natural resonant frequency. This frequency depends on the wire tension which varies as the strain varies. An electromagnetic coil is used to pluck the wire and to measure the frequency of the vibration so produced. The change in frequency is related to the strain change and may be read by data acquisition units equipped to handle vibrating wire gages. An internal spring holds the wire at an initial tension which is normally in the midrange position of the gage. This initial tension may be set to any desired level by a simple adjustment technique during installation. Thus, gages may be set to place the available range mostly in tension or mostly in compression. Temperature compensation is achieved by matching the coefficient of expansion of the wire to that of the underlying surfaces. The plucking coil housing is separate from the gage and may be carried from gage to gage if required. It may also be attached permanently to the gage if that is desired. Lightning protection is also available.

e. Prerequisites: None.

f. Input specifications: Not applicable.

g. Output specifications:

Range (microstrain):	±1500
Sensitivity (microstrain):	1
Thermal coefficient (of expansion):	6.5 ppm/^{o}

h. Interfacing: The model VK-4100 may be operated and monitored automatically by any data logger equipped to handle vibrating wire type gages. The following systems are capable of making measurements from vibrating wire gages:

Netpac Acurex, para. IV-14-2
Telemac CNF-7, para. IV-14-12
Terratrac, para. IV-15-3

i. Power requirements and recommendations: The vibrating string must be plucked by an electromagnetic coil that must be excited by the automatic data system.

j. Environmental conditions: Temperature range is from -40 to 120 °C.

k. Physical specifications:
Gage dimensions (LxWxH): 2.5 x .63 x .29 in.
Gage dimensions (LxWxH) (with housing): 3.0 x .68 x .5 in.

l. Reliability: Not available.

m. Application information: This model can automatically and accurately measure strain in concrete or steel surfaces at points of interest that may be thousands of feet away from the automatic data system with only one cable connected to it. Data sheets with calibration coefficients for each gage are supplied by the manufacturer for use in the calibration of application software.

n. Comments: Because of its ease of installation and the availability of commercial systems to monitor it automatically, the VK-4100 model is ideally suited for retrofitting strain measurements of concrete or steel structures for an automatic data acquisition system.

II-14-2. Type and description: **Strain gage, vibrating wire.** The model VCE-4200 vibrating wire strain gage is designed for direct embedment in concrete. The standard length of the gage is about six inches, but longer lengths are available. One end of the gage has holes to permit the attachment to a spider which is used to orient the gages at different angles in mass concrete. The gage is ruggedly designed, waterproof, and provides long-term stability. The VCE-4200 uses the vibrating wire principle which employs changes in an electrical frequency to reflect changes in strain. This frequency signal may be transmitted thousands of feet without loss of accuracy caused by cable resistances or imperfections. Geokon and several other manufacturers make data loggers that can remotely and automatically monitor vibrating wire devices.

a. Model: Geokon model VCE-4200

b. Manufacturer: Geokon, Inc.
7 Central Ave.,
West Lebanon, NH 03784
(Phone)(603) 298-5064

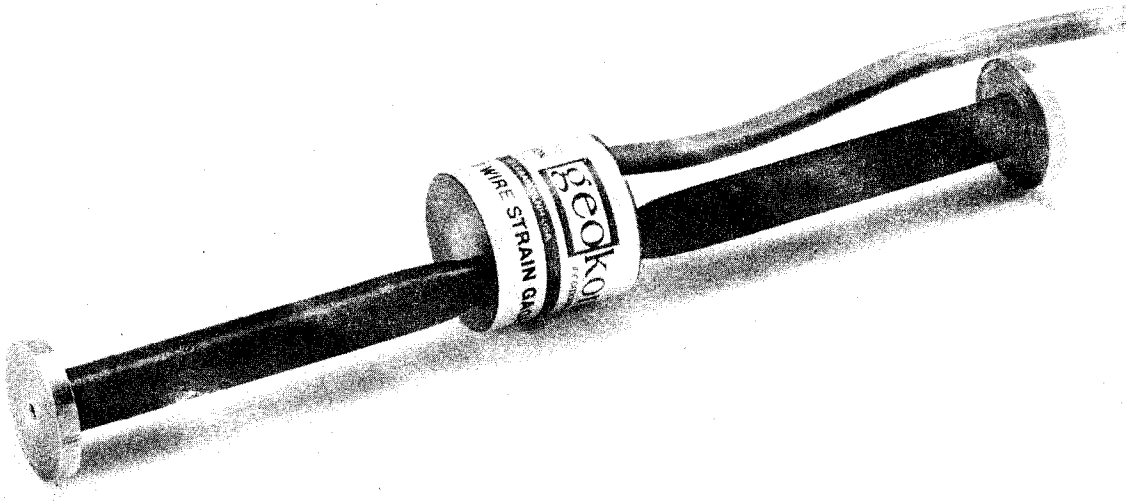

STRAIN GAGE, VCE-4200 (PHOTO COURTESY OF GEOKON, INC.)

c. Pricing: $70.00 for the gage; cable is $0.35 / ft.

d. Operation: Strains on the instrument are measured using the vibrating wire principle. A length of steel wire is tensioned between two end blocks that are embedded directly into concrete. Deformation, i.e., strain changes of the concrete mass, causes the two end blocks to move relative to one another, thus altering the tension in the steel wire. The tension is measured by plucking the wire and measuring its resonant frequency of vibration using an electromagnetic coil. The change in frequency is related to the strain change and may be read by data acquisition units equipped to handle vibrating wire gages. The thermal coefficient of expansion of the gage is very similar to that of concrete so that correction for temperature is seldom required. For conditions requiring temperature measurements, a thermistor can be encapsulated inside the plucking coil assembly.

e. Prerequisites: None.

f. Input specifications: Not applicable.

g. Output specifications:

Maximum strain range:	3000 micro-in./in.
Sensitivity:	0.5-2.0 micro-in./in.
Thermal coefficient (of expansion):	10.8 ppm/^{o}C

h. Interfacing: This model may be operated and monitored automatically by any data logger equipped to handle vibrating wire type gages. The following systems are capable of making measurements from vibrating wire gages:

Netpac Acurex, para. IV-14-2
Telemac CNF-7, para. IV-14-12
Terratrac, para. IV-15-3

i. Power requirements and recommendations: The vibrating wire must be plucked by an electromagnetic coil that must be excited by the automatic data system.

j. Environmental conditions: The temperature range is from -20 to 80 ^{o}C.

k. Physical specifications:

Active gage length:	6 in.
Coil resistance:	150 ohms

l. Reliability: Not available.

m. Application information: This model can automatically and accurately measure changes in strain while embedded in a mass of concrete and may be located thousands of feet from the automatic data system with only one cable connected to it.

n. Comments: None.

II-14-3. Type and description: **Strain meter, elastic wire.** The Carlson elastic wire strain meter is an instrument that measures changes in length (strain) and temperature of a concrete structure. The meter contains two coils which vary in electrical resistance when strained. By monitoring the ratio of the resistances of the two coils, one obtains a measure of strain. A measure of temperature can be obtained by summing the resistances of the two coils. The standard strain meter can be

embedded in concrete, or it can be attached to a surface with saddle mounts.

a. Model: Carlson Strain Meter

b. Manufacturer: Carlson Instruments
1190-C Dell Ave.
Campbell, CA 95008
(Phone) (408) 374-8959

c. Pricing:

20-in. gage	model A-20	$175.00
10-in. gage	model A-10	$165.00
8-in. gage	model A-8	$145.00

d. Operation: The meter contains two coils of highly elastic steel wire, one of which increases in length and electrical resistance when a strain occurs, while the other decreases. The ratio of the two resistances is independent of temperature (except for thermal expansion). Therefore, the change in the resistance ratio is a measure of strain. The total resistance on the other hand is independent of strain, since one coil increases the same amount as the other decreases due to a change in length of the meter. Thus, the total resistance is a measure of temperature. The strain meter is furnished in three different lengths from eight inches to 20 inches, but all have the identical sensing element. The end away from the cable has a tapped hole to permit attachment to a spider for mass concrete embedment, or for adding an extender to increase the length and sensitivity. The body is covered with PVC sleeving to break the bond with the concrete. The meter is supplied with 30 inches of 16 AWG cable connected to it for splicing with another cable. Because of the effect of cable resistance, it is recommended that no greater than 600 feet of 16 AWG cable be used. Larger wires should be used with longer lengths.

e. Prerequisites: None.

f. Input specifications: Not applicable.

g. Output specifications:

	A-8	A-10	A-20
Range (microstrain):	2600	2100	1050
Resolution (microstrain):	3.6	2.9	1.5
Resolution (Temp. ^{o}F):	0.1	0.1	0.1

h. Interfacing: This meter may be monitored by any data acquisition system that can measure resistances. However, the DAS should also be capable of numerically calculating the ratio and the sum of the resistances measured and convert these quantities into an engineering form, i.e., degrees or microstrain. The following systems are capable of making measurements from Carlson meters:

Netpac Acurex, para. IV-14-2
Colorado Data Systems, para. IV-14-3
Hewlett-Packard 6108XAA, para. IV-14-5
Hewlett-Packard 3421A, para. IV-14-6
Neff 470, para. IV-14-9
Solartron 3595, para. IV-14-10
Quantrol, para. IV-14-11
Terra Computer, para. IV-14-13
Autodata Acurex, para. IV-15-1
Terratrac, para. IV-15-3
Fluke 2280B, para. IV-15-4

i Power requirements and recommendations: None.

j. Environmental conditions: Embedded.

k. Physical specifications:

	A-8	A-10	A-20
Gage lgth (in.):	8	10	20
Weight (lb):	.8	1.3	1.8

l. Reliability: Not available.

m. Application information: The Carlson elastic wire strain meter may be used to measure changes in length (strain) and the temperature of concrete structures. This instrument may be automated by a data acquisition system that is capable of measuring resistances. The DAS must be able to take the ratio and the sum of these resistances to get the data in a usable form. Also, since precision resistances are being measured, cabling resistance must be considered; it is recommended that no more than 600 feet of cable should be used for this reason. Data sheets with calibration coefficients for each gage are supplied by the manufacturer for use in the calibration of application software.

n. Comments: For a new installation of gages, the vibrating wire type would be preferable over the Carlson type when automation is planned. Cable resistance is not a factor with the vibrating wire type as it can be located farther away from the data acquisition system without sacrificing accuracy. Also, more commercial equipment specifically suited for

handling the vibrating wire gages is available on the market.

II-14-4. Type and description: **Meter, reinforced concrete (R-C).** This instrument is used for measuring the behavior of reinforced concrete. It is a rod-like device which simulates a bar of reinforcing steel. The rod is hollow to accommodate a miniature strain meter within it. This strain meter measures the change in length from which the stress is derived. The R-C meter is unique in that it measures the change in length of the steel rod regardless of the occurrence of fine cracking, which is common in reinforced concrete.

a. Model: Carlson R-C Meter

b. Manufacturer: Carlson Instruments
1190-C Dell Ave.
Campbell, CA 95008
(Phone) (408) 374-8959

c. Pricing: $290.00 for instrument only

d. Operation: This instrument measures the average strain over most of the length of the rod. This is important when there are external cracks, because the average length change determines the stress in the reinforcing. If a conventional strain meter was used, it would indicate different results depending upon whether the crack was within the gage or just beyond it. The strain meter used in the R-C meter uses two varying resistances to give a measure of strain and temperature. The ratio of the resistances gives a measure of strain, while the sum of the resistances gives a measure of temperature. The temperature correction may be applied simply and accurately because the R-C meter is also a thermometer, and the correction per degree is well-known. The meter is supplied with 30 inches of 16 AWG cable for splicing to another cable.

e. Prerequisites: None.

f. Input specifications: Not applicable.

g. Output specifications:

Range (microstrain):	±950
Resolution (microstrain):	3.4
Resolution (stress in steel psi):	106
Resolution (Temp. °F):	0.1
Maximum stress (psi):	44,000

h. Interfacing: The R-C meter may be monitored by any data acquisition system that can measure resistances. However, the DAS should also be capable of numerically calculating the ratio and the sum of resistances measured and convert these quantities into an engineering form, i.e., degrees of microstrain. The following systems are capable of making measurements from Carlson meters:

Netpac Acurex, para. IV-14-2
Colorado Data Systems, para. IV-14-3
Hewlett-Packard 6108XAA, para. IV-14-5
Hewlett-Packard 3421A, para. IV-14-6
Neff 470, para. IV-14-9
Solartron 3595, para. IV-14-10
Quantrol, para. IV-14-11
Terra Computer, para. IV-14-13
Autodata Acurex, para. IV-15-1
Terratrac, para. IV-15-3
Fluke 2280B, para. IV-15-4

i. Power requirements and recommendations: None.

j. Environmental conditions: Embedded.

k. Physical specifications:

Gage length (in.):	34.5
Weight (lb):	5.5

l. Reliability: Not available.

m. Application information: This instrument may be automated by a data acquisition system that is capable of measuring resistances. This DAS must be able to take the ratio and the sum of these resistances to get the data in a usable form. Also, since precision resistances are being measured, cable length and resistance must be considered. Data sheets with calibration coefficients for each gage are supplied by the manufacturer for use in the calibration of application software.

n. Comments: None.

II-14-5. **Type and description: Strain meter, miniature.** The Carlson miniature strain meter is an instrument that measures changes in length (strain) and temperature in concrete where small size and economy are important. The meter contains two coils which vary in electrical resistance when strained. By monitoring the ratio of the resistances of the coils, one obtains a measure of strain. A measure of temperature may be obtained by summing the resistance of the two coils. This type of strain meter is designed to be embedded into concrete.

a. Model: M-4, M-8, and M-10, Carlson

b. Manufacturer: Carlson Instruments
1190-C Dell Ave.
Campbell, CA 95008
(Phone) (408) 374-8959

c. Pricing:

4-in. gage - model M-4	$ 85.00
8-in. gage - model M-8	$100.00
10-in. gage - model M-10	$100.00

d. Operation: The strain meter contains two coils of highly elastic steel wire, one of which increases in length and electrical resistance when a strain occurs while the other decreases. The ratio of the two resistances is independent of temperature (except for thermal expansion). Therefore, the change in resistance in the resistance-ratio is a measure of strain. The total resistance on the other hand is independent of strain, since one coil increases the same amount the other decreases due to a change in length of the meter. Thus, the total resistance is a measure of temperature. This meter can measure resistance ratios to 0.01% and resistances to 0.01 ohms. The basic meter is four inches long, but it may be extended to greater length by removing the end flange and adding an extender without disturbing the sensing element, thus increasing its sensitivity. The body of the meter is covered with PVC sleeving to break the bond with the concrete. The meter is supplied with 30 inches of 22 AWG cable connected to it for splicing to another cable.

e. Prerequisites: None.

f. Input specifications: Not applicable.

g. Output specifications:

	M-4	M-8	M-10
Range (microstrain):	3900	2000	1600
Resolution (microstrain):	5.8	2.9	2.3
Resolution (Temp. ^{o}F):	0.1	0.1	0.1

h. Interfacing: The miniature strain meter may be monitored by any data acquisition system that can measure resistances. However, the DAS should also be capable of numerically calculating the ratio and the sum of the resistances measured and convert these quantities into an engineering form, i.e., degrees or microstrain. The following systems are capable of making measurements from Carlson meters:

Netpac Acurex, para. IV-14-2
Colorado Data Systems, para. IV-14-3
Hewlett-Packard 6108XAA, para. IV-14-5
Hewlett-Packard 3421A, para. IV-14-6
Neff 470, para. IV-14-9
Solartron 3595, para. IV-14-10
Quantrol, para. IV-14-11
Terra Computer, para. IV-14-13
Autodata Acurex, para. IV-15-1
Terratrac, para. IV-15-3
Fluke 2280B, para. IV-15-4

i. Power requirements and recommendations: Not available.

j. Environmental conditions: None specified.

k. Physical specifications:

	M-4	M-8	M-10
Gage length (in.):	4.062	8	10
Weight (lb):	.19	.32	.37

l. Reliability: Not available.

m. Application information: The miniature strain meter may be used to measure changes in length (strain) and the temperature of concrete structures. This instrument can be automated by a data acquisition system that is capable of measuring resistances, and must be able to take the ratio and the sum of these resistances to get the data into a usable form. Also, since precision resistances are being measured, cabling length and resistance must be considered. Data sheets with calibration coefficients for each gage are supplied by the manufacturer for use in the calibration of application software.

n. Comments: For the installation of new gages, the vibrating wire type would be preferable, where suited, over the Carlson type when automation is planned. Cable resistance is not a factor with the vibrating wire type, and it may be located farther away from the data acquisition system without sacrificing accuracy. Also, more commercial equipment specifically suited for handling the vibrating wire gages is available on the market.

II-14-6. **Type and description: Embeddable strain gages, Ailtech.**

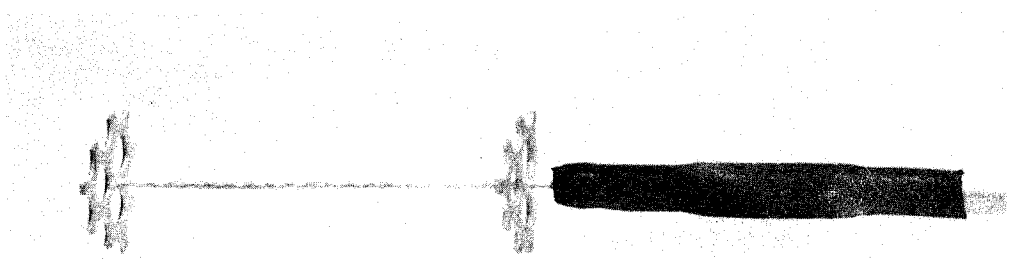

EMBEDDABLE STRAIN GAGE (PHOTO COURTESY OF EATON CORP.)

a. Model: CG 129, CG 159 (EATON)

b. Manufacturer: Eaton Corp.
Automation Product Div.
5340 Alla Road
Los Angeles, CA 90066
(Phone) (213) 822-3061

c. Pricing: Model CG 129 - $169.00
Model CG 159 - $185.00
Cable is $0.38 / ft.

d. Operation: The Ailtech embeddable gage consists of a short length of nickel-chromium alloy wire which has been electroformed or etched so that a sensitive element is formed. The wire is insulated by compacted MgO powder in a 0.04 in. D stainless steel tube. Perforated-end disks are provided for alignment and placement in the concrete at the location where strain is to be read.

e. Prerequisites: None.

f. Input specifications: ±20,000 microinches/inch.

g. Output specifications:

Model	Resistance	Tolerance	Gage Factor
CG 129	120 ohms	±3.5 ohms	2.0
CG 159	350 ohms	±10 ohms	2.0

h. Interfacing: The CG 129 and 159 series may be operated and monitored automatically by any data logger equipped to handle strain gages, i.e., bridge circuits. The following systems are capable of making measurements from strain type gages which require full, half, or quarter bridge completion circuits:

Colorado Data Systems, para. IV-14-3
Hewlett-Packard 3054, para. IV-14-4
DASCON-1, para. IV-14-7
DASH-16, para. IV-14-8
Neff 470, para. IV-14-9
Solartron 3595, para. IV-14-10
Quantrol, para. IV-14-11
Telemac CNF-7, para. IV-14-12
Terra Technology PDL-200, para. IV-14-13
Terratrac, para. IV-15-3

i. Power requirements and recommendations: Requires a continuous current of 50 mA maximum or a pulsed current up to 300 mA, depending on operating temperature and test structure.

j. Environmental conditions: Temperature range is -50 to 180 ^{o}F.

k. Physical specifications: Standard gage lengths of 2, 4, or 6 in.

Case Material: AISI Type 321 stainless steel

Gage Active Diameter: 0.04 in.

Moment of Inertia: 3.9×10^{-8} in^4

Section Modulus: 2.2×10^{-6} in^3

The cable consists of vinyl insulated, foil shielded, vinyl sheath, 22 gage, 0.016 ohm/ft wire.

l. Reliability: Highly reliable as long as they are placed and embedded properly.

m. Application information: They are easily installed in any weather. Precasting in briquettes from concrete that is identical to that used in the structure provides even greater ruggedness. Typical applications are in concrete dams, tunnels, and bridge abutments.

n. Comments: Standard gages include ten feet of integral cable, and are compensated to match materials expanding at 6 ppm /^{o}F.

Temperature

II-15-1. Type and description: **Thermocouple, Type T,** copper constantan, stainless steel, 1/4-in. D , ungrounded, and isolated.

a. Model: T61D

b. Manufacturer: Barber-Coleman Co.
1354 Clifford Ave.
P.O. Box 2940
Loves Park, IL 61132-2940
(Phone) (815) 877-0241

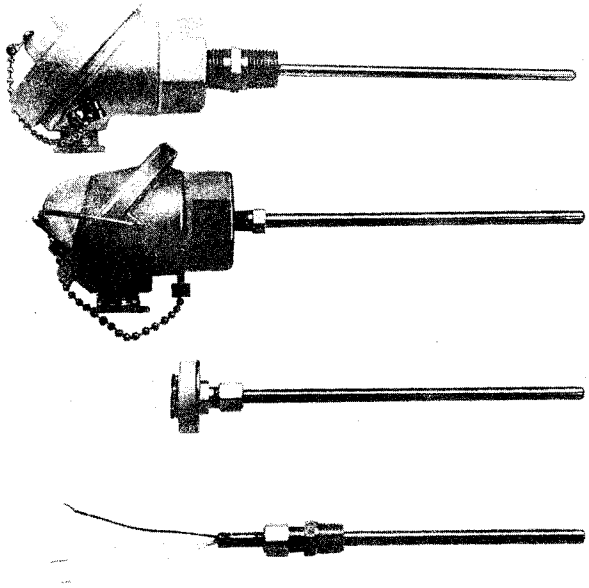

THERMOCOUPLE, T61D (PHOTO COURTESY OF BARBER-COLEMAN CO.)

c. Pricing: Not available.

d. Operation: The bimetallic element causes a small (millivolts) voltage to appear at the terminals of the thermocouple. This voltage is proportional to the temperature at the junction.

e. Prerequisites: Requires a signal conditioner/ temperature transmitter to amplify and convert the voltage to a process current or voltage. Cold junction compensation is also required.

f. Input specifications: Temperature range: -185 to 370 °C.

g. Output specifications: Not available.

h. Interfacing: Requires a signal conditioner/temperature transmitter to convert to a process current, or voltage to interface to data loggers and other data acquisition equipment. The following systems are capable of reading thermocouples and RTDs:

Netpac Acurex, para. IV-14-2
Colorado Data Systems, para. IV-14-3
Hewlett-Packard 3421A, para. IV-14-6
DASCON-1, para. IV-14-7
DASH-16, para. IV-14-8
Neff 470, para. IV-14-9
Solartron 3595, para. IV-14-10
Quantrol, para. IV-14-11
Telemac CNF-7, para. IV-14-12
Terra Technology PDL-200, para. IV-14-13
Autodata Acurex, para. IV-15-1
Fluke 2280B, para. IV-15-4
Octapak, para. IV-14-1

i. Power requirements and recommendations: Not applicable.

j. Environmental conditions: Not available.

k. Physical specifications: Copper constantan element inside a 1/4-in. stainless steel sheath. It is insulated with magnesium oxide. Length of element is not specified.

l. Reliability: Not available.

m. Application information: Options include: thermowells, connector head, and protective coverings.

n. Comments: None.

II-15-2. Type and description: **Resistance temperature detectors (RTDs).**

a. Model: R711 Series

b. Manufacturer: Barber-Coleman Co.
1354 Clifford Ave.
P.O. Box 2940
Loves Park, IL 61132-2940
(Phone) (815) 877-0241

c. Pricing: $50.00 to $80.00, depending on options

d. Operation: RTDs are sensors for indicators, recorders, and/or controllers. The sensor is a wire-wound element of copper, nickel, or platinum. A temperature change causes a linear resistance change throughout the range of the sensor. A three-wire system is commonly used to minimize offsets due to extension leadwire lengths and temperatures.

e. Prerequisites: Requires a signal conditioner to convert the resistance change to a current or voltage change proportional to temperature.

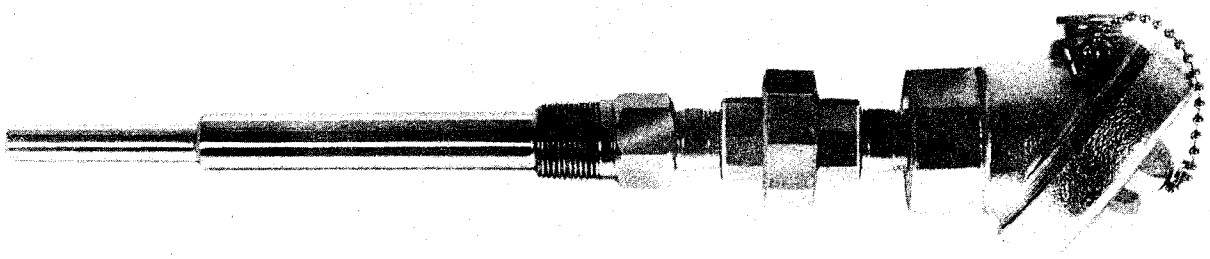

RTD, R711 (PHOTO COURTESY OF BARBER-COLEMAN)

f. Input specifications: Not applicable.

g. Output specifications: Platinum 100 ohms at 0 ^{o}C. Coefficient of resistance: 0.00385 ohms/ohm/^{o}C. Accuracy: 0.25% max.

h. Interfacing: Requires signal conditioner/temperature transmitter to convert a resistance to a process current or voltage suitable for data acquisition

systems. The following systems are capable of reading thermocouples and RTDs:

Netpac Acurex, para. IV-14-2
Colorado Data Systems, para. IV-14-3
Hewlett-Packard 3421A, para. IV-14-6
DASCON-1, para. IV-14-7
DASH-16, para. IV-14-8
Neff 470, para. IV-14-9
Solartron 3595, para. IV-14-10
Quantrol, para. IV-14-11
Telemac CNF-7, para. IV-14-12
Terra Technology PDL-200, para. IV-14-13
Autodata Acurex, para. IV-15-1
Fluke 2280B, para. IV-15-4
Octapak, para. IV-14-1

i. Power requirements and recommendations: Not applicable.

j. Environmental conditions: Not available.

k. Physical specifications: 1/4 in. D, 1 in. length. Element can withstand over 100 Gs sine wave shock of 3 msec.

l. Reliability: Not available.

m. Application information: May be installed in a thermowell as specified in model number extension.

n. Comments: Other options available are thermowell assemblies with various diameters and lengths, head-to-well connection, and dual element three-wire configurations.

II-15-3. Type and description: Thermistor temperature probes, precision semiconductor sensing element.

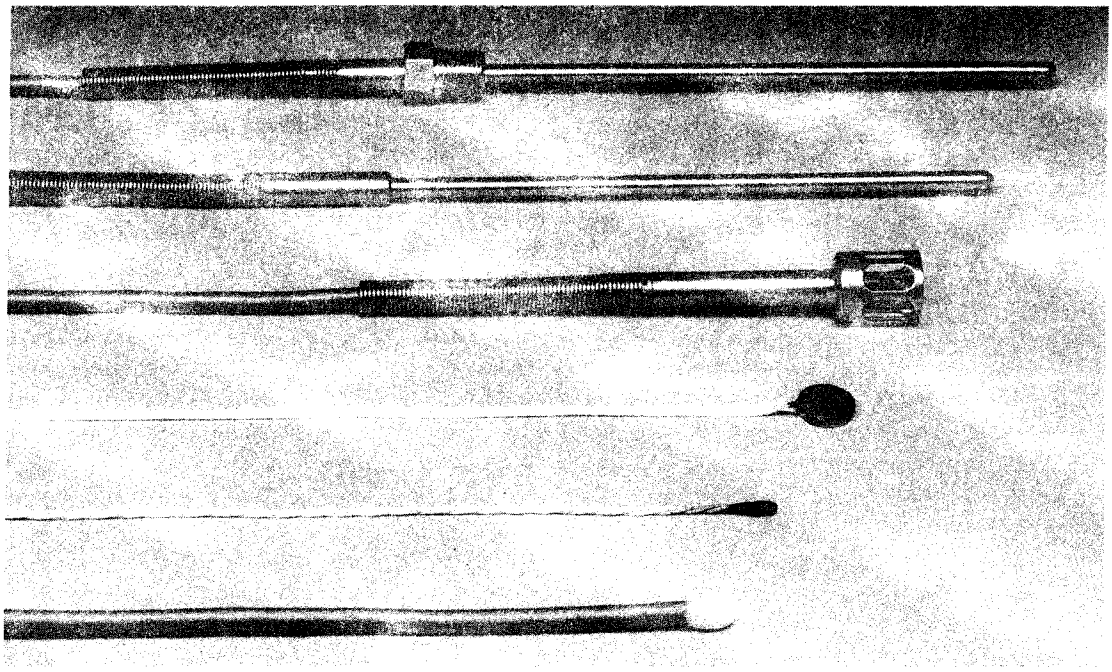

THERMISTOR, 700 SERIES (PHOTO COURTESY OF YELLOW SPRINGS)

a. Model: 700 Series

b. Manufacturer: Yellow Springs Instrument Co., Inc.
Box 465
Yellow Springs, OH 45387
(Phone) (513) 767-7241
(Represented by)
Daytronic Corp.
2589 Corporate Place
Miamisburg, OH 45342
(Phone) (513) 866-3300

c. Pricing:

Model:	701	703	710
Price:	$100.00	$175.00	$175.00
Use:	G.P.	Tube	Tube

d. Operation: The sensing element consists of two precision semiconductor thermistors in one probe. A slight temperature change causes a rapid and pronounced change in the electrical resistivity of the thermistor material. Accurate measurement of this resistivity yields direct temperature readings.

e. Prerequisites: Proper measuring instrumentation is needed to adapt thermistor signals for digitizing, limit monitoring, and other uses (alarms).

f. Input specifications: Temperature range: -30 to +100 °C.

g. Output specifications:
Accuracy: ±0.15 °C. min.
Time constant: 701 (9.0 sec.)
703 (3.6 sec.)
710 (3.6 sec.)

h. Interfacing: The following systems are capable of making resistance type measurements:
Hewlett-Packard 6108XAA, para. IV-14-5
Hewlett-Packard 3421A, para. IV-14-6
Solartron 3595, para. IV-14-10
Campbell CR21, para. IV-15-2
Fluke 2280B, para. IV-15-4

i. Power requirements and recommendations: Not applicable.

j. Environmental conditions: The 700 series models are designed to withstand a temperature range of -30 to 100 °C and are designed for submersion. However, submersion of model 703 is limited to the length of its wiring cap.

k. Physical specifications:

Model	701	703	710
Dim. sq.cm. (L x diam)	.64 x .79	11.43 x .4	11.43 x .4

l. Reliability: The 700 series probes have been used for many years by numerous companies. The company provides a certificate of traceability to the National Bureau of Standards for the calibration of its product during manufacture.

m. Application information: Model 701 is used for deep water temperature measurements and often buried for subsoil readings. Model 703 is for continuous immersion in liquids. Model 710 is suitable for use in pipes or inside closed vessels.

n. Comments: Probes should not be used in RF fields.

II-15-4. Type and description: Thermocouple, type T(Cu-CuNi), bimetallic junction sheathed in stainless steel tube.

a. Model: TS-T6-06-C4-H2 (Burling); MT1316TIS (Foxboro); 1848-56 (Love); NB2 CPSS-14U-12 (Omega).

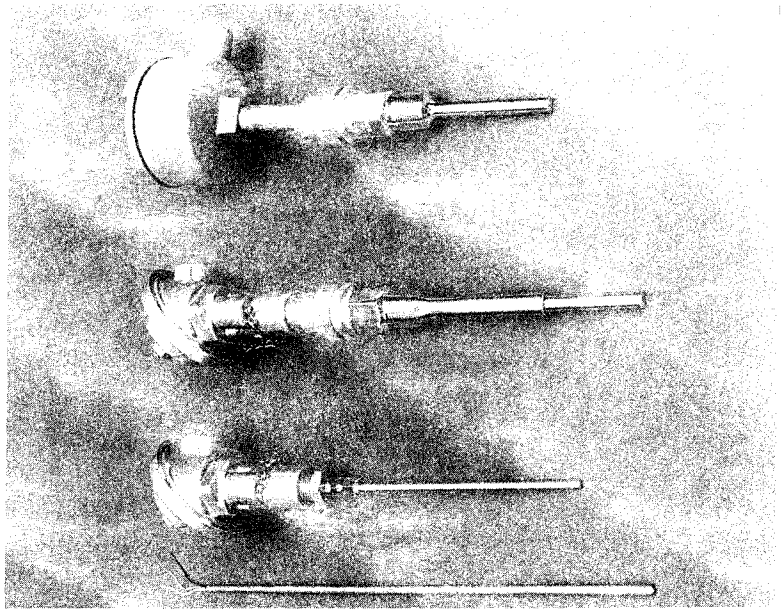

FOXBORO THERMOCOUPLE (PHOTO COURTESY OF FOXBORO CO.)

b. Manufacturer: Burling Instrument Company
P.O. Box 298, 16 River Rd.
Chatham, NJ 07928
(Phone) (201) 635-9481

Foxboro Co.
100 Neponset Ave.
Foxboro, MA 02035
(Phone) (617) 543-8750

Love Controls Corp.
1475 S. Wheeling Rd.
Wheeling, IL 60090
(Phone) (312) 541-3232

Omega Engineering
1 Omega Dr.
Stamford, CT 06907
(Phone) (203) 359-1660

c. Pricing: MT1316TIS (not available), 1848-56 ($57.75), NB2 CPSS-14U-12($49.00). Prices vary from one style to another and according to the type of thermocouple junction, grounded, ungrounded, or exposed junction.

d. Operation: The thermocouple is placed appropriately in the measured media. The voltage (millivolts) produced

at the junction is dependent on the temperature at the junction.

e. Prerequisites: To avoid the generation of thermal EMFs at the terminals of the readout instrument or at a terminal block, both resulting junctions must be referenced at the same temperature. In the case of the T-type thermocouple, the CuNi lead and Cu extension wire or terminal connection would produce an EMF dependent on the temperature where they terminate. This problem is solved by referencing the undesired junction at some known temperature (normally 0 °C). A signal conditioner is needed to increase the signal-to-noise ratio since the voltage produced by the thermocouple is less than 20 mVDC.

f. Input specifications: Temperature range: -200 to 350 °C.

g. Output specifications: -5.602mV @-200 °C, 17.816mV @ 350 °C, 38.8uV/°C.

h. Interfacing: Requires signal conditioning and conversion to 4-20 mV process current. Refer to para. IV-17-6 for more information about temperature transmitters. The following systems are capable of reading thermocouples and RTDs:

Netpac Acurex, para. IV-14-2
Colorado Data Systems, para. IV-14-3
Hewlett-Packard 3421A, para. IV-14-6
DASCON-1, para. IV-14-7
DASH-16, para. IV-14-8
Neff 470, para. IV-14-9
Solartron 3595, para. IV-14-10
Quantrol, para. IV-14-11
Telemac CNF-7, para. IV-14-12
Terra Technology PDL-200, para. IV-14-13
Autodata Acurex, para. IV-15-1
Fluke 2280B, para. IV-15-4
Octapak, para. IV-14-1

i. Power requirements and recommendations: None required.

j. Environmental conditions: Temperatures should not exceed temperature range of thermocouple, -200 to 350 °C. Type T thermocouples are ideal for damp environments.

k. Physical specifications: 1/4 in. D x 6 in. L (optional lengths), and other diameters are available 1/16, 1/8, and 3/16 in. The above models have an aluminum NEMA 4-terminal head.

l. Reliability: May short out if temperatures exceed insulation limits.

m. Application information: Used for measuring temperature in many environments, including corrosive and high temperature.

n. Comments: Omega Engineering, Foxboro, Love Controls, and many others manufacture signal conditioners and transmitters for thermocouples. Refer to Signal Conditioners under Automated Data Processing Equipment, para. IV-17-1.

II-15-5. Type and description: **Resistance temperature detectors (RTDs)**

a. Model: ULTRA-7

b. Manufacturer: HY CAL Engineering
9650 Telstar Ave.
El Monte, CA 91731
(Phone) (818) 444-4000

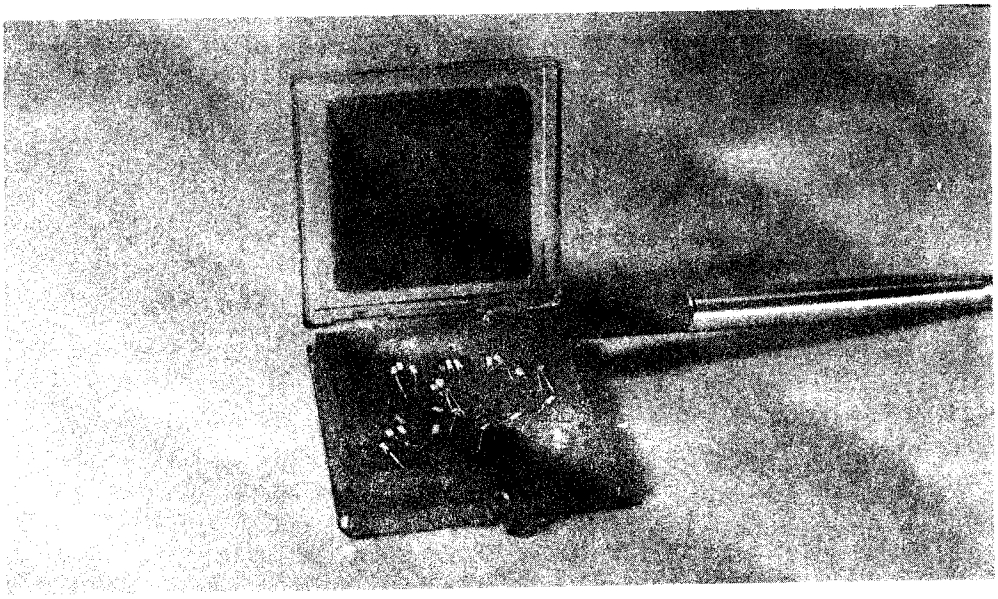

RTD, ULTRA-7 (PHOTO COURTESY OF HYCAL ENGINEERING)

c. Pricing: $17.00, ceramic element
$75.00, stainless steel housed version

d. Operation: The resistive element changes its resistance proportional to the temperature of its environment.

e. Prerequisites: Requires signal conditioning (model CT 807) for conversion to 4-20 mA process current. In some cases, the sensor should be mounted in a thermowell where it is protected from high pressures, corrosive materials, high flow rates, etc.

f. Input specifications: Temperature range -320 to +1000 °F. Excitation current: 2 mA maximum, 1 mA nominal.

g. Output specifications: @ -300 °F R=266.048 ohms;
@ 0 °F R=1000 ohms ±0.2%;
@ +300 °F R=1553.952 ohms.

h. Interfacing: Requires signal conditioning to convert to 4-20 mA process current for use with automated data acquisition equipment. The following systems are capable of reading thermocouples and RTDs:

Netpac Acurex, para. IV-14-2
Colorado Data Systems, para. IV-14-3
Hewlett-Packard 3421A, para. IV-14-6
DASCON-1, para. IV-14-7
DASH-16, para. IV-14-8
Neff 470, para. IV-14-9
Solartron 3595, para. IV-14-10
Quantrol, para. IV-14-11
Telemac CNF-7, para. IV-14-12
Terra Technology PDL-200, para. IV-14-13
Autodata Acurex, para. IV-15-1
Fluke 2280B, para. IV-15-4
Octapak, para. IV-14-1

i. Power requirements and recommendations: Not applicable.

j. Environmental conditions: Stay within temperature range.

k. Physical specifications: Depends on application. HY-CAL has many options for mounting the Ultra 7 RTD.

l. Reliability: Mean time between failures: 5.2×10^6 hr.

m. Application information: Not available.

n. Comments: Ultra 7 is a multipurpose sensor.

II-15-6. **Type and description: Thermometer, resistance.** The Carlson resistance thermometer is especially designed and constructed for embedment into concrete. The resistance thermometer is simply a noninductively wound coil of enameled copper wire enclosed in a vinyl mastic cover.

a. Model: TF1

b. Manufacturer: Carlson Instruments
1190-C Dell Ave.
Campbell, CA 95008
(Phone)(408) 374-8959

c. Pricing: $32.00

d. Operation: The thermometer is a coil of copper wire wound noninductively on an insulating spool in such a way that there are no appreciable strain changes as the temperature changes. The entire active element is protected by wrapping with mastic padding and PVC tape. The Carlson thermometer has a uniform resistance of 39.00 ohms at 0 ^{o}F, and changes 0.01 ohm /^{o}F. The thermometer is supplied with 30 inches of 16 AWG cable for splicing to another cable.

e. Prerequisites: None.

f. Input specifications: Not applicable.

g. Output specifications:

Range:	0 to 180 ^{o}F
Resolution:	0.10 ^{o}F

h. Interfacing: This resistance thermometer may be monitored by any data acquisition system that measures precision resistances. The following systems are capable of making measurements from Carlson meters:

Netpac Acurex, para. IV-14-2
Colorado Data Systems, para. IV-14-3
Hewlett-Packard 6108XAA, para. IV-14-5
Hewlett-Packard 3421A, para. IV-14-6
Neff 470, para. IV-14-9
Solartron 3595, para. IV-14-10
Quantrol, para. IV-14-11
Terra Computer, para. IV-14-13
Autodata Acurex, para. IV-15-1
Terratrac, para. IV-15-3
Fluke 2280B, para. IV-15-4

i. Power requirements and recommendations: None.

j. Environmental conditions: Not available.

k. Physical specifications:

Length:	3.75 in.
Weight:	0.5 lb

l. Reliability: Not available.

m. Application information: The Carlson resistance thermometer is designed to measure the temperature inside a concrete structure without being influenced by other processes occurring inside the structure. This instrument may be monitored by a data acquisition system that is capable of measuring precision resistances; however, cable lengths and resistance must be considered. Data sheets with calibration coefficients for each gage are supplied by the manufacturer for use in the calibration of application software.

n. Comments: None.

II-15-7. Type and description: Resistance temperature detector (RTD) with platinum element whose resistance varies proportionately to the temperature.

a. Model: 1300 series

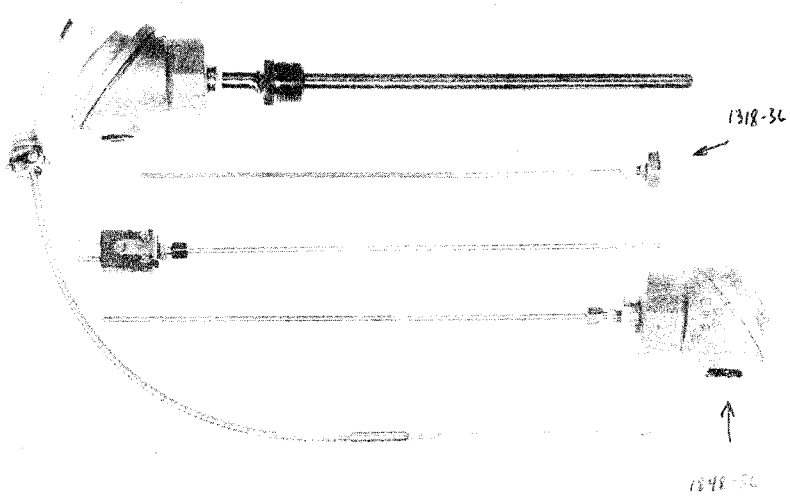

RTD, 1318-36 (PHOTO COURTESY OF LOVE CONTROLS CORP.)

b. Manufacturer: Love Controls Corp.
1475 Wheeling Road
Wheeling, IL 60090
(Phone) (312) 541-3232

c. Pricing: $65.00 to $105.00, depending on wire terminations. There is an added cost of $1.50 / 6 in. of additional length.

d. Operation: The 1300 series RTD uses a platinum element whose resistance changes with temperature. This particular series uses the NBS calibration curve, where Alpha = 0.00392 ohms/ohm/^{o}C.

e. Prerequisites: The measuring instrument should follow the NBS calibration curve to obtain maximum accuracy.

f. Input specifications: Temperature ranges are from -150° to 500 ^{o}F for Teflon covered, -150 to 800 ^{o}F for the bayonet type, and -150 to 900 ^{o}F for all others. Customer must specify range.

g. Output specifications: Sensing resistance: 100 ohms @ 0 ^{o}C $\pm$0.1 ohm.

h. Interfacing: Requires a constant voltage or current power supply for excitation and for use with automated data acquisition equipment. The following systems are capable of reading thermocouples and RTDs:

Netpac Acurex, para. IV-14-2
Colorado Data Systems, para. IV-14-3
Hewlett-Packard 3421A, para. IV-14-6
DASCON-1, para. IV-14-7
DASH-16, para. IV-14-8
Neff 470, para. IV-14-9
Solartron 3595, para. IV-14-10
Quantrol, para. IV-14-11
Telemac CNF-7, para. IV-14-12
Terra Technology PDL-200, para. IV-14-13
Autodata Acurex, para. IV-15-1
Fluke 2280B, para. IV-15-4
Octapak, para. IV-14-1

i. Power requirements and recommendations: Not applicable.

j. Environmental conditions: Not available.

k. Physical specifications:

Model:	1308-w	1318-x	1318-y	1318-z
Temp:	800 ^{o}F	900 ^{o}F	900 ^{o}F	500 ^{o}F
Basic Length:	4 in.	4 in.	12 in.	12 in.

Where w = 4 through 24; x = 1 through 9; y = 16 through 18, 28 through 30, 36 and 38, and z = 55 through 64. Models 1388-1(900 °F) and 1388-2(500 °F) are 12 in.

The above variations w,x,y, and z have to do with angle of bend. The model 1388-1 has a closed wiring head.

Rigid tubing is 3/16 in. diam. Flexible is 1/4 in. diam.

l. Reliability: Resistive sensors are generally found to be more dependable, more precise, and less complicated in their operation when compared with thermocouples.

m. Application information: Not available.

n. Comments: Where extension leads are required between the probe and the measuring instrument, use suitably insulated copper wire.

II-15-8. **Type and description: Thermometer, vibrating wire.** Consists of a vibrating wire stretched along a rigid base with different thermal expansion characteristics.

a. Model: ST

b. Manufacturer: Telemac
2 Rue Auguste-Thomas 92600
Asnieres, France
(marketed by)
Roctest, Inc.
7 Pond Street
Plattsburgh, NY 12901
(Phone) (518) 561-3300

c. Pricing: $400.00

d. Operation: Changes in temperature cause changes in wire vibration frequency.

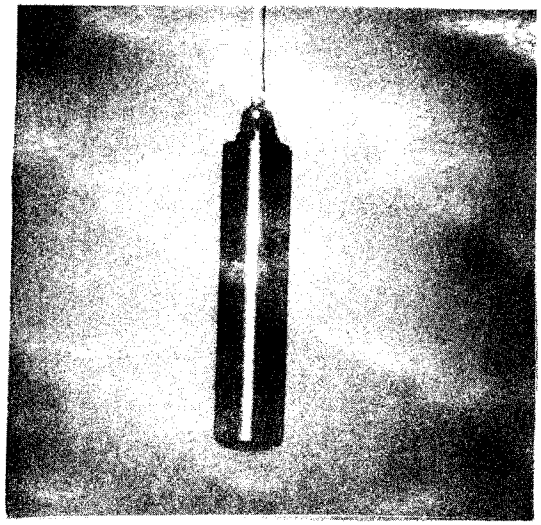

VIBRATING WIRE THERMOMETER, ST. (PHOTO COURTESY OF TELEMAC)

e. Prerequisites: Data acquisition equipment capable of energizing the vibrating wire and detecting the resonant frequency.

f. Input specifications: Not available.

g. Output specifications: No frequency range specified.

h. Interfacing: This model may be operated and monitored automatically by any data logger equipped to handle vibrating wire type gages. The following systems are capable of making measurements from vibrating wire gages:

Netpac Acurex, para. IV-14-2
Telemac CNF-7, para. IV-14-12
Terratrac, para. IV-15-3

i. Power requirements and recommendations: Vibrating wire is excited by regular impulses to the signal pick-up solenoid.

j. Environmental conditions: Operating range: -20 to +60 ^{o}C.

k. Physical specifications: Length - 198 mm; diameter - 40 mm. Weight - 0.95 kg. Wire is encased in a strong, perfectly watertight brass tube.

l. Reliability: Not available.

m. Application information: Not available.

n. Comments: None.

Uplift

II-16-1. Type and description: **Cell, pore pressure.** See para. II-10-1 under the title of Pore Pressure for a detailed description of this instrumentation.

II-16-2. **Type and description: Transducer, pressure,** 1/4-28 National Pipe Thread (NPT) fitting with stainless steel body.

a. Model: Series 505

b. Manufacturer: Action Instruments, Inc.
8601 Aero Drive
San Diego, CA 92123
(Phone) (619) 279-5726

c. Pricing: $375.00

d. Operation: A pressure is applied to the diaphragm and its movement is converted to a 4-20 mA output.

e. Prerequisites: Appropriate pipe fittings for installation on standpipes and excitation must be provided.

f. Input specifications: Pressure range depends on specific model number. The ranges are: 0-50, 0-100, and 0-1000 PSIG.

g. Output specifications: 4-20 mA process current. Accuracy: $\pm$0.5% FS at 75 ^{o}F. Zero balance = $\pm$2.0% of FS. Resolution is infinite. Load resistance = 0-2000 ohms depending on excitation voltage.

h. Interfacing: 20-mA process current receiver. The following systems contain 4-20 mA process current receivers:
Netpac Acurex, para. IV-14-2
Hewlett-Packard 3421A, para. IV-14-6
Terratrac, para. IV-15-3
REMAC 3100, para. IV-14-14

i. Power requirements and recommendations: Excitation voltage of 12-67 VDC with appropriate series resistance.

j. Environmental conditions: Operable temperature range: 0 to 160 °F.

k. Physical specifications: 1.13-in. D by 3.00- in L.

l. Reliability: Not available.

m. Application information: This instrument may be used in retrofitting standpipe uplift cells.

n. Comments: None.

Water Flow

II-17-1. Type and description: **Flow meter, closed pipe, ultrasonic/electronic.** Detailed specifications follow.

a. Model: Series 100

b. Manufacturer: Badger Meter, Inc.
6116 E. 15th St.,
Tulsa, OK 74112
(Phone) (918) 836-8411

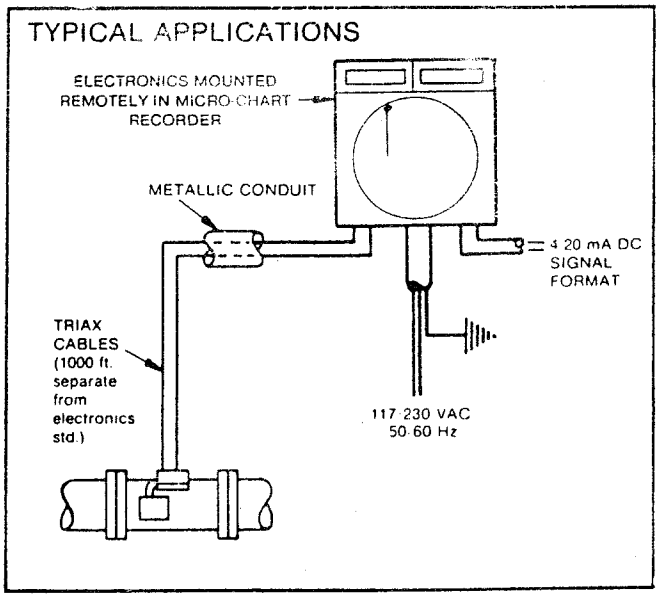

FIGURE 7. FLOW METER, CLOSED PIPE

c. Pricing: $3,820.00 to $18,000.00, depending upon options

d. Operation: Ultrasonic energy is transmitted by compression waves in the fluid generated by two piezoelectric sensors mounted on the pipe wall. Each sensor transmits and receives, and the transmit time of each sonic pulse from sensor to sensor may be electronically processed into an output signal proportional to fluid velocity.

e. Prerequisites: Proper pipe size must be determined for ordering the correct spooler-mounted sensors. Vertical or horizontal mounting is possible, but pipe must be

full and upstream piping sufficient to assure profile conditioning. (Refer to ASME Fluid Meters, 6th edition, page 180).

f. Input specifications: The flow range is from 0 fps to 40 fps.

g. Output specifications: 4-20 mA DC calibrated to flow. Load = 1 k-ohm. Other output formats are available. Accuracy for model 155 is ±1% of actual volumetric flow or ±0.01 fps, whichever is greater of the flow range. For model 150, ±2% or ±0.01 fps. For series 100: repeatability is ±0.25%; hysteresis is ±<0.25%.

h. Interfacing: Standard 4-20 mA current loop and voltage level outputs that interface directly to data acquisition equipment. Signal conditioning provided within the electronics unit. The following systems contain 4-20 mA process current receivers:

Netpac Acurex, para. IV-14-2
Hewlett-Packard 3421A, para. IV-14-6
Terratrac, para. IV-15-3
REMAC 3100, para. IV-14-14

i. Power requirements and recommendations: 115/230 VAC. Indoor model uses 20 watts with heating element.

j. Environmental conditions: The ultrasonic sensors are designed for submersion and the electronics are housed in a National Electrical Manufacturers Association (NEMA) 4 enclosure. The electronics unit may be placed up to 1000 feet from the sensors. The outdoor unit can be operated from -40 to 150 °F in a 95% relative humidity environment. The indoor unit can operate from 30 to 150 °F and still maintain rated accuracy.

k. Physical specifications: The sensors may be strapped to pipes from 6 to 120 in. in diameter, or a spooler version with premounted sensors can be placed in line with standard pipe sizes from 3 to 120 in. in diameter. The electronics unit has dimensions of 14- X 23- X 6- in.

l. Reliability: Badger Meter has designed ultrasonic flow meters since the mid 1960s and currently has the most advanced and reliable single-path ultrasonic flow meter on the market. This is further backed up by their use of state-of-the-art electronics and the use of diagnostic lights and switches to indicate unit status.

m. Application information: These units are used in the industrial markets and with the water and wastewater

industry. Successful applications include: water, sewage, sludges, batching systems, process waste, chemical flows, and petroleum products.

n. Comments: None.

II-17-2. Type and description: **Flowmeter, open channel, ultrasonic/electronic.** Detailed specifications follow.

a. Model: Series 300

b. Manufacturer: Badger Meter, Inc.
6116 E. 15th St.
Tulsa, OK 74112
(Phone) (918) 836-8411

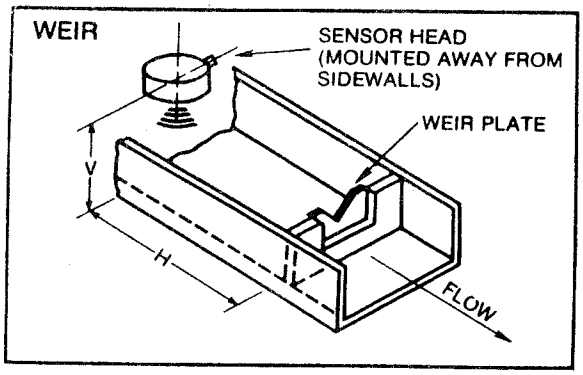

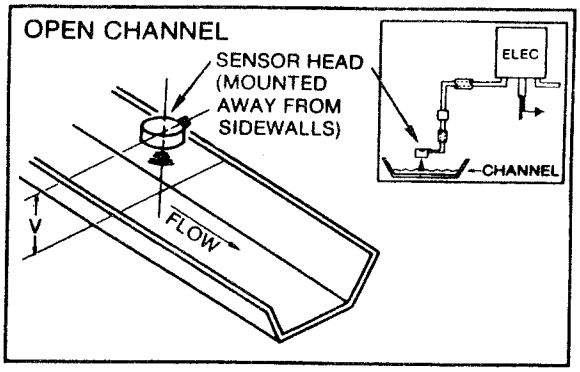

FIGURE 8. FLOW METER, OPEN CHANNEL

c. Pricing: $8,850.00 to $11,050.00, depending upon options

d. Operation: Two independent measurements are made to compute the flow. Ultrasonic energy is transmitted by compression waves in the fluid by two piezoelectric sensors mounted on the channel wall opposite each other to determine fluid velocity, and a third sensor mounted above the flow to determine the depth. Each sensor transmits and receives, and the transit time of each sonic pulse from sensor to sensor may be electronically

processed into an output signal proportional to fluid velocity or depth, dependent upon the actual depth of the water in the channel. This switching is done automatically. Below 33% of the maximum depth, depth only measurements form the flow output using the free-flow equation such as Chezy's or Manning's (see Badger Meter bulletin 940432). Above 33% of maximum depth, both depth and true velocity of flow are measured and flow is calculated with the continuity equation Q=VA.

e. Prerequisites: A well-developed velocity profile is needed for accurate measurement. A general rule is to place a metering section so as to secure 10 to 12 diameters of straight run upstream and 1 or 2 diameters downstream. This is not intended for use with weirs.

f. Input specifications: 0 fps to 40 fps.

g. Output specifications: 4-20 mA DC calibrated to flow into 1-kohm load. Accuracy is ±4% or ±3% of actual flow for the model 320 or model 325, respectively. All Badger flowmeters have wide rangeability of as little as 200:1 and as much as 250:1.

h. Interfacing: 4-20 mA process current receiver. The following systems contain 4-20 mA process current receivers:

Netpac Acurex, para. IV-14-2
Hewlett-Packard 3421A, para. IV-14-6
Terratrac, para. IV-15-3
REMAC 3100, para. IV-14-14

i. Power requirements and recommendations: 115/230 VAC, single phase, 40 watts indoors, 300 watts outdoors.

j. Environmental conditions: The ultrasonic sensors are designed for submersion, and the electronics are housed in a separate NEMA 4 rated enclosure. The outdoor unit can withstand temperature variations from -40 to 150 °F in a 95% humidity environment. The indoor unit can withstand temperature variations from 30 to 150 °F and still maintain rated accuracy.

k. Physical specifications: The velocity sensors may be mounted on the sides of a tank or a flowmeter tube with factory-installed sensors. Channel sizes can be from 12 to 120 in. in width. The electronics unit has dimensions of 14- x 23- x 6- in. The depth sensor is mounted above the channel. The critical distance is not known at this time but is estimated to be about 12 ft.

l. Reliability: Badger Meter has designed ultrasonic flowmeters since the mid-1960s and currently has the most advanced and reliable single-path ultrasonic flowmeter on the market. This is further backed up by their use of state-of-the-art electronics and the use of diagnostic lights and switches to indicate unit status.

m. Application information: For low flow, improved accuracy may be achieved by installing a small flume or weir on the channel bottom to stabilize the depth of flow relation. Insertion increases head loss at low level flows, but is relatively negligible at full depth flows. Electronic modules slide in or out for inspection and maintenance. Digital read-out or totalizer are both bidirectional or unidirectional.

n. Comments: Alarm signal driver, pulse rate output, triple set-point switches, direction driver, current transmitter, totalizing/integrating driver, and relay output interface. A total of four accessories may be added to the electronics unit enclosure. See Badger Meter Bulletins 940411, 949412, 940455, and 940436 for maintenance, and Bulletins 940410 and 940411 for installation.

II-17-3. Type and description: **Flowmeter, insertion.** Three types: adjustable, fixed, and bidirectional.

a. Model: HP series

b. Manufacturer: Hoffer Flow Controls, Inc.
149 Highway 36 (P.O. Box 130)
Port Monmouth, N.J. 07758
(Phone) (201) 787-1997

c. Pricing: $1,050.00, approximately

d. Operation: The Hoffer HP series profile/insertion flowmeter consists of a turbine rotor and support assembly which provides an output signal that is proportional to flow velocity. The flowing media causes a vaned rotor assembly to spin at a rate proportional to the velocity of the media. The motion of the rotor in turn generates the electrical output signal. A pickup coil in the interior detects the motion. In general, a velocity measurement taken at one point is used to infer the average flow through the

pipe. Knowledge of the fluid properties of the media and the cross-sectional area of the piping makes this possible. Velocity profile and swirl pattern measurements may be obtained since controlled movement in two axes (insertion depth and axial rotation) is possible.

e. Prerequisites: A flow channel may be necessary to use this flowmeter. Since this flowmeter is intended for use in closed pipes, some kind of special mounting may be necessary as well as guarding against clogging of the rotor.

f. Input specifications: Usable range: 0.25 to 50 fps.

g. Output specifications: For standard ranges 5-50 psi, 2-20 psi, 1-10 psi. Linearity: ±1% in 10:1 flow turndown ratios. Repeatability: ±0.25% standard.

h. Interfacing: Requires a signal converter to go from a frequency change to a buffered analog process current output. See para. IV-17-2 for description of Hoffer signal converters.

i. Power requirements and recommendations: Not applicable.

j. Environmental conditions: Pressure range: 150 psi for adjustable model. 1000 psi for fixed model.

k. Physical specifications: Insertion length: available in lengths to accommodate pipe sizes from 4" to 48" long for both adjustable and fixed style. Stem, stem housing, and rotor support are 304 stainless steel. Seal materials - Teflon, Viton, and others available. Rotor - Ni 200, 430 or 17.4 SS.

l. Reliability: Not available.

m. Application information: Not available.

n. Comments: The following Hoffer signal conditioners are recommended: ACC1, ACC-7B, and ACC-17B (compatible with magnetic pickoff input). The following signal converters are recommended: ACC-18 and ACC-34 for process current output; ACC-28 and ACC-35B for 0-5 V analog output.

Water Level

II-18-1. **Type and description**: Pressure transducer, depth measurement. This pressure transducer uses an integrated silicon strain gage bridge attached to a diaphragm whose deflection and gage resistance varies with pressure.

a. Model: PDCR 10/D

b. Manufacturer: Druck, Incorporated
Miry Brook Road
Danbury, CT 06810
(Phone) (203) 792-8981

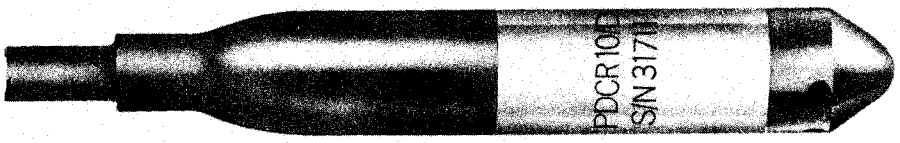

PRESSURE TRANSDUCER, PDCR 10/D (PHOTO COURTESY OF DRUCK, INC.)

c. Pricing: $575.00 for 1 psi range
$465.00 for 2.5 psi range
$415.00 for 5 psi range

d. Operation: The strain gage is excited by 10 VDC at 15 mA maximum (polarity is important). The crystal silicon diaphragm whose active diameter and thickness determine the pressure range and application is deflected by the external pressure through the pressure port. This deflection, in turn, changes the strain gage resistance and output voltages.

e. Prerequisites: The transducer requires an excitation voltage of 10 VDC at 15 mA maximum. Signal conditioning and amplification are required. This may be accomplished by using Druck's type DPI 201/DPI 203 pressure indicator which provides excitation, signal conditioning, and amplification, as well as providing a standard analog or BCD output or optional 4-20 mA current output.

f. Input specifications: The following depth transducer ranges are available: 2.5 ft (1 psi), 5.5 ft (2.5 psi), 11 ft (5 psi), 22 ft (10 psi), 33 ft (15 psi), 50 ft (22 psi), 67 ft (30 psi), 112 ft (50 psi), 168 ft (75 psi) , 225 ft (100 psi), 337 ft (150 psi), 500 ft (220 psi), 675 ft (300 psi), 1125 ft (500 psi), 2025 ft (900 psi), 2250 ft (1000 psi), and 4500 ft (2000 psi). These are based upon water as the pressure medium.

g. Output specifications: 17 mV for 1 psi range; 25 mV for 2.5 psi range; 50 mV for 5 psi range; and 100 mV for 10 psi range and above. Output impedance: 1000 ohms nominal. Load impedance: <1000 ohms. For 4-20 mA operation, use the models PTX160/D or PTX 110/D depth transmitters. Accuracy: ±0.1% best straight line (BSL). Resolution: infinite.

h. Interfacing: The unit requires signal conditioning and amplification before use with automated data acquisition equipment. Druck makes this type of equipment and optional interfaces such as IEEE, 4 to 20 mA, buffered BCD and buffered multiplexed BCD outputs. The following systems are capable of making measurements from strain type gages which require full, half, or quarter bridge completion circuits:

Colorado Data Systems, para. IV-14-3
Hewlett-Packard 3054, para. IV-14-4
DASCON-1, para. IV-14-7
DASH-16, para. IV-14-8
Neff 470, para. IV-14-9
Solartron 3595, para. IV-14-10
Quantrol, para. IV-14-11
Telemac CNF-7, para. IV-14-12
Terra Technology PDL-200, para. IV-14-13
Terratrac, para. IV-15-3

i. Power requirements and recommendations: 10 VDC @ 15 mA excitation.

j. Environmental conditions: -5 °F to 175 °F. May withstand mechanical shock of 1000g for 1 msec in three axes.

k. Physical specifications: Weight: 1.75 oz, 0.65 in. diameter, 4 in. long from tip to cable entry point.

l. Reliability: Solid-state, shock resistant micro-circuitry makes these transducers ideal for harsh environments.

m. Application information: These units are specifically designed for depth measurement in small boreholes, reservoirs, the sea, and many other applications. The pressure ranges are normally vented gages for depths less than 300 ft and sealed gages for greater depths.

n. Comments: The Druck PTX 160/D or PTX 110/D pressure transmitters are preferred for remote locations.

II-18-2. **Type and description: Pressure transducer, vibrating wire.** This instrument is used to measure fluid pressures, e.g., ground water elevations, and pore pressures in boreholes, embankments, foundations, pipelines, wells, and pressure vessels.

a. Model: 4500S (Geokon)

b. Manufacturer: Geokon, Inc.
7 Central Ave.
West Lebanon, NH 03784
(Phone) (603) 298-5064

c. Pricing: $220.00

d. Operation: Pressure changes detected by this instrument is measured using the plucked vibrating wire principle. The transducer employs a sensitive diaphragm, coupled to a vibrating wire whose ends are clamped using a patented swaging technique that ensures high stability while allowing for miniaturization of the components. An electromagnetic coil, located close to the wire, is used to both pluck the wire and to convert the wire vibrations so produced into an electrical output current whose frequency is identical to the natural resonant frequency of the wire. Changing pressure causes deflection of the diaphragm, thereby altering the tension of the wire and its resonant frequency of vibration. Thus, for each pressure, there is a corresponding frequency output.

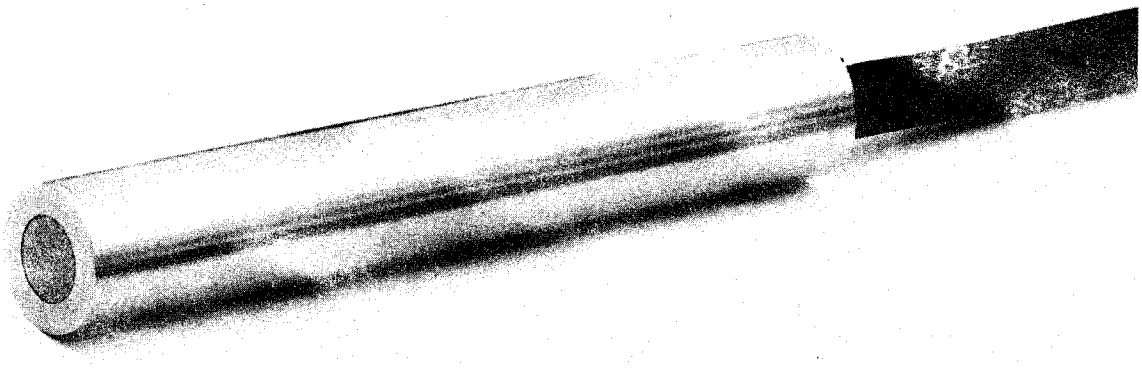

PRESSURE TRANSDUCER, 4500S (PHOTO COURTESY OF GEOKON, INC.)

e. Prerequisites: None.

f. Input specifications: 50, 100, 250, 1000, and 5000 psi, standard ranges are available.

g. Output specifications: Output frequency: 1200-1800 Hz for pressure ranges 0-50 to 0-5000 psi. Accuracy: ±0.5%. Resolution: 0.1% FS.

h. Interfacing: This model may be operated and monitored automatically by any data logger or data acquisition system equipped to handle plucked vibrating wire type gages. The following systems are capable of making measurements from vibrating wire gages:

Netpac Acurex, para. IV-14-2
Telemac CNF-7, para. IV-14-12
Terratrac, para. IV-15-3

i. Power requirements and recommendations: Vibrating wire must be plucked by an electromagnetic coil pulsed by an automated data acquisition system.

j. Environmental conditions: Operating temperature: -20 to 150°F. The transducer is lightning protected and hermetically sealed. Water penetration and temperature variations have little effect on the frequency of the output signal.

k. Physical specifications: Dimensions: 0.75 in. D x 5.125 in. L. Hermetically sealed in a 0.26-lb stainless steel case. Comes with a four-conductor, direct-burial type 22 AWG cable.

l. Reliability: Not available.

m. Application information: The model 4500S is temperature-stable and is ideal for use under water. Special considerations for mounting and calibrating to water depth are essential for using this transducer in this particular application.

n. Comments: When selecting a transducer for use as a piezometer, it is recommended that the range selected should be the one closest to the maximum anticipated field pressure since this will give the greatest sensitivity. Auto-resonant versions are also available.

II-18-3. Type and description: **Pressure transmitter, depth measurement.** This unit is an integrated crystal silicon diaphragm and strain gage bridge.

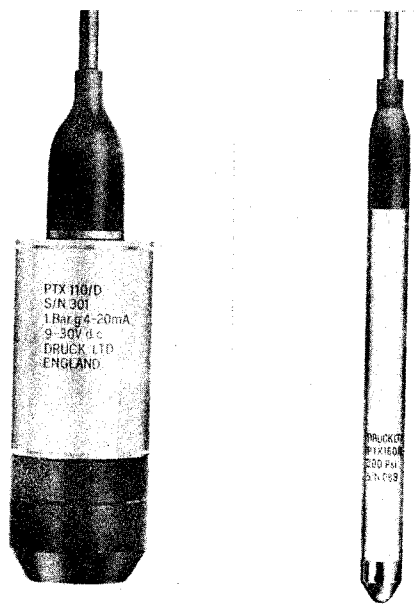

TRANSDUCERS, PTX 110/D AND 160/D (PHOTOS COURTESY OF DRUCK, INC.)

a. Model: PTX 110/D and PTX 160/D

b. Manufacturer: Druck, Incorporated
Miry Brook Road
Danbury, CT 06810
(Phone) (203) 792-8981

c. Pricing: $915.00 for 1 psi range
$810.00 for 2.5 psi range
$765.00 for ≥5 psi range

d. Operation: Output current varies proportionally to the pressure. Pressure against the crystal silicon diaphragm causes the integrated strain gage bridge resistance to change and, correspondingly, the voltage across the bridge, which is amplified and converted to a current proportional to the pressure.

e. Prerequisites: Unit requires a supply voltage between 9 and 30 VDC.

f. Input specifications: Barometric ranges are 70-mbar to 700-mbar; and from 1-bar to 135-bar gages are available. Other pressure units (psi, kPa, etc.) may be specified.

g. Output specifications: Output current at zero pressure is 4 mA; at full pressure, 20 mA. Sensitivity: ±0.25% at 20 °C. Linearity and hysteresis is ±0.1% BSL.

h. Interfacing: Requires 4-20 mA process current receiver. The following systems contain 4-20 mA process current receivers:
Netpac Acurex, para. IV-14-2
Hewlett-Packard 3421A, para. IV-14-6
Terratrac, para. IV-15-3
REMAC 3100, para. IV-14-14

i. Power requirements and recommendations: 9 to 30 VDC across transmitter terminals, and the positive supply must be grounded.

j. Environmental conditions: -20 to 80 °C temperature range. Unit withstands mechanical shock of 1000g for 1 msec, maximum.

k. Physical specifications:

PTX 110/D	
Diameter:	41 mm
Head lgth:	113 mm
Cable lgth:	1 m
Weight:	114 g

PTX 160/D

Diameter:	17.5 mm
Head lgth:	220 mm
Cable lgth:	1 m
Weight:	114 g

l. Reliability: Not available.

m. Application information: These units are specifically designed for depth measurement in small boreholes, reservoirs, the sea, and many other applications. Currently, they are used by the U.S. Army Corps of Engineers.

n. Comments: These units are the transmitter versions of the PDCR 10/D and PDCR 60/D units. (Refer to para. II-18-1).

PART III: RETROFIT INSTRUMENTATION

General

III-1-1. This part of the report deals with the upgrading and automation of instrumentation of older concrete structures, and is intended to provide the user with information concerning the available instrumentation as well as the methods and procedures for automating the outputs of these devices. It is designed to provide a solution to automating existing, already installed instruments in order to minimize the cost of providing a fully automated instrument reading system, or to explain where instruments cannot be automated and as a result must be replaced to achieve that status. Other information provided for each instrument includes the various automated data processing equipment and interfaces which make it compatible, available software packages, any special installation requirements, and any recommended maintenance. In some cases, the retrofitted instrument system uses instruments described in the INSTRUMENTATION part or the AUTOMATED DATA PROCESSING EQUIPMENT part. In such a case, these instruments are referenced by a paragraph number to the appropriate part which has the specification sheet. All other pertinent information about the retrofitting is contained in this part.

Crack and Joint Measuring Devices

III-2-1. The mechanical devices that are installed on concrete structures, and shown below, are read by visually reading the amount of mechanical displacement.

a. Monolith joint displacement indicator

b. Relative movement indicator

c. Ball-n-box gage

d. Multiposition strain gage

e. Dial gage

f. "L" shaped gage

g. Scratch gage

These types of gages need to be replaced in order to automate the measuring function.

III-2-2. The existing crack and joint instruments which may be retrofitted into an automated data acquisition system are as follows:

a. Carlson joint and foundation meter

b. Multiple position borehole extensometer

c. Vibrating wire joint meter

d. Vibrating wire crack meter

III-2-3. Specifications for three of these meters may be found in the PART II of this report. The Carlson joint and foundation meters, J and F series (Carlson) or JM, JL, and JS series (Terrametrics) may be found in para. II-3-1. The vibrating wire joint meter, model 4400 (Geokon) is described in para. II-3-2. The vibrating wire crack meter, model 4410 (Geokon) is described in para. II-3-3.

III-2-4. Multiple position borehole extensometer. The multiple position borehole extensometer, using tensioning wires manufactured by Terrametrics, is currently not in production. Although this unit is not recommended for new designs, it can be readily adapted to automated systems. The tensioning wires attach to a cantilever in the sensing head which is connected to a bonded resistive strain gage. The operation of this type of unit would not be changed when it is automated. The automation of this instrument may be accomplished by using a bridge-completion type of signal conditioning or a simple resistance measurement. Of the eight possible positions on the extensometer used, the same number of channels would be required of the signal conditioner or resistance measurement system. The instrument should have a calibration data sheet generated by the factory for each extensometer on the sensing head. This information, along with the installation lead resistance information would be used by the data processing unit to calculate the corrected data.

III-2-5. Joint and crack meter. The Carlson joint and foundation meter and the vibrating wire joint and crack meter only measures movement in one axis. Some of the manually-read instruments that this gage would replace, such as the "L" shaped gage, measures rotation of one side of the crack with respect to the other. Other instruments can measure the vertical as well as the horizontal component of motion. The Carlson joint and foundation meters and the vibrating wire crack meter may be mounted to give the user the equivalent type of information. Two meters may be installed across the crack or joint at an angle from one another, and by using triangulation principles on the resultant data, the vertical and horizontal components of movement can be calculated.

a. Installation:

1. The installation of the Carlson joint and foundation meters on the exposed surface of a structure

require that each end of the meter be securely attached to sound concrete. "L" brackets have to be fabricated by the user for mounting of the meter. Installation sockets for the meters are available to aid in installation. Refer to Figure 9, Carlson joint meter.

2. The installation of the vibrating wire crack meter is a more straightforward procedure, since the crack meter was designed as an add-on device. The crack meter is installed by drilling two holes on either side of the crack and grouting the legs of the crack meter into these holes. The crack meter is attached to the legs by means of ball joints. Refer to Figure 2, Geokon crack meter.

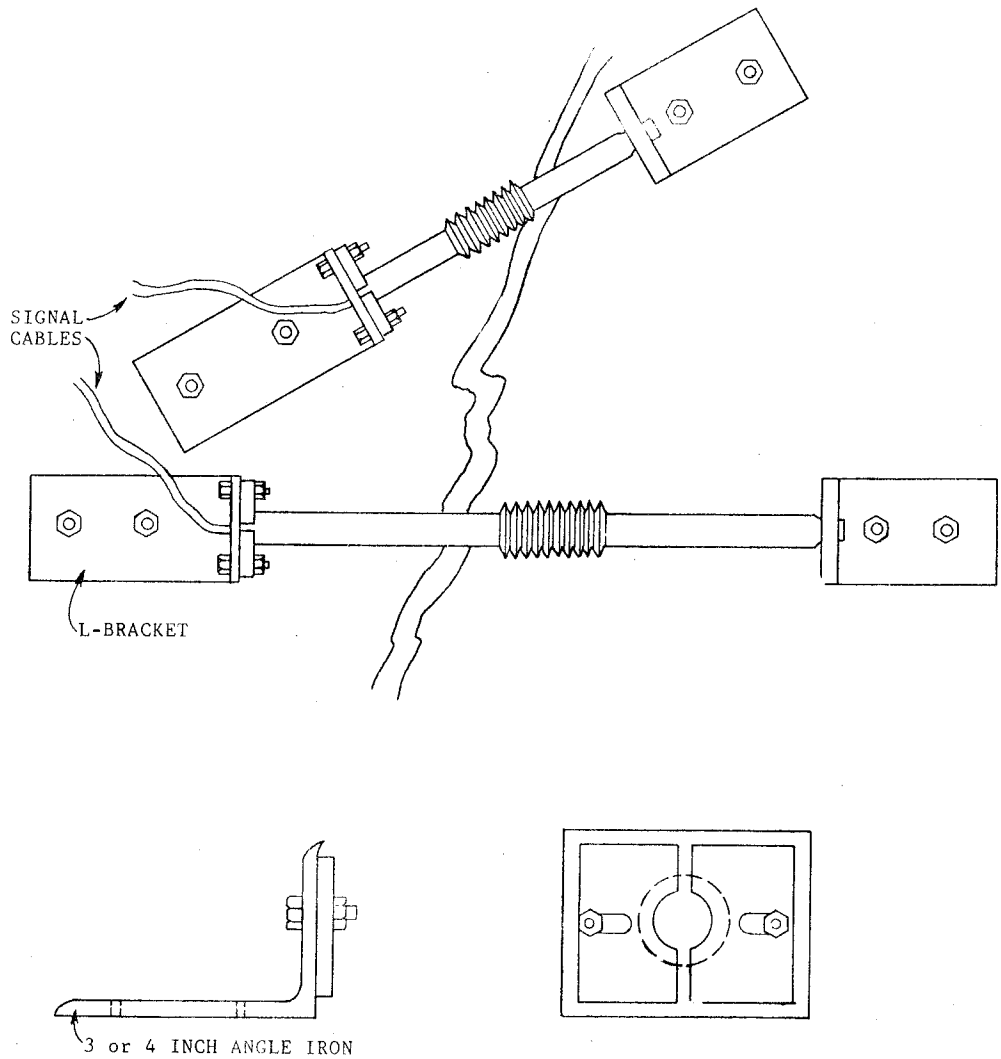

FIGURE 9. CARLSON JOINT METER INSTALLATION

b. Outputs:

1. The Carlson gage outputs a dual resistance which may be measured on a data acquisition system using one of several different methods. These methods are explained in detail in Appendix B of this manual. The method selected is normally determined by what other types of gages are being measured and what fits the overall hardware configuration.

2. The outputs of the vibrating wire and joint crack meters are a frequency. The data acquisition system must provide a controller to generate the necessary voltage pulses to pluck the wire and to convert the resultant frequency into a data reading.

c. Calibration: Calibration data sheets are supplied by the manufacturer for both the Carlson joint and foundation meter and the vibrating wire joint and crack meter. These data should be entered into the data processing system to calculate the corrected data.

Extensometers

III-3-1. The rod-type borehole extensometers currently used on many of the Army Corps of Engineer projects are normally read by using a dial or digital depth micrometer. These readings must be performed by hand. Refer to Figure 10 for a typical extensometer installation. The automation of these devices can be performed with a minimal amount of effort. One method uses the Remote Readout Linear Potentiometer Model 1500 manufactured by Geokon. Refer to para. II-5-2 for more detailed information about the Model 1500. The extensometer comes in 2-, 4-or 6-inch ranges. Also the number of sensing points can vary from one to six to accommodate multiple borehole positions. The installer will be responsible for figuring the mechanics of attaching the 1/4-inch linear potentiometer shaft to the extensometer rod and also for mounting the linear potentiometer assembly to the accessible end of the borehole. Refer to Figure 12, for a typical custom-built extensometer measuring device. The data acquisition system used must be able to make either resistance measurements or measure the voltage drop across the potentiometer. The most accurate method would be to use a 4-wire voltage measurement with excitation voltage. Refer to Figure 13, 4-wire potentiometer connection. The 4-wire potentiometer connection will null out the effects of any cable resistance on the readings.

III-3-2. Another method of inputting this device would be to use the model PTT Potentiometer Transmitter manufactured by Moore Industries. Refer to para. IV-18-4 of this report for more detailed information. Refer also to Figure 11 Block Diagram Potentiometer Transmitter.

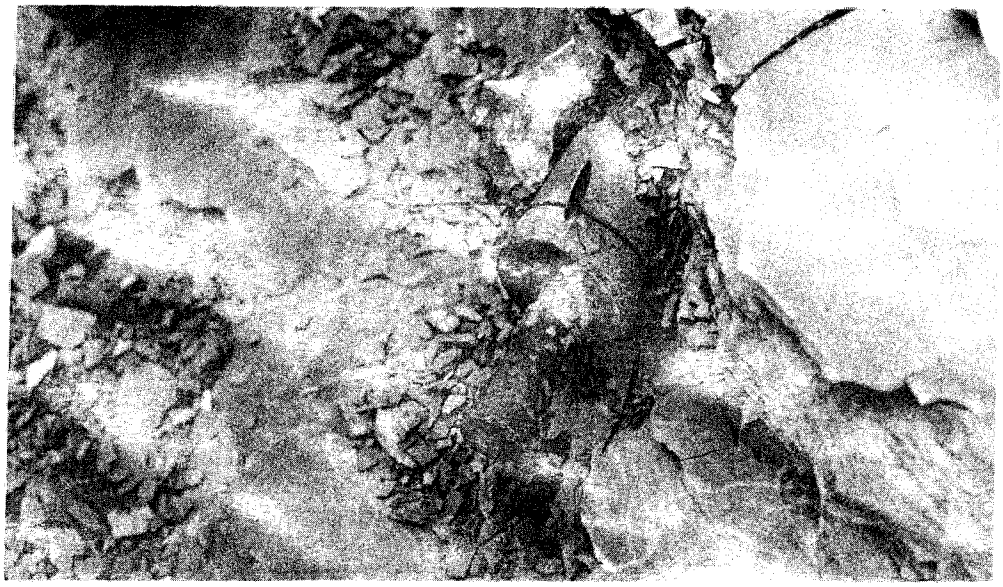

FIGURE 10. TYPICAL EXTENSOMETER (PHOTO COURTESY OF B. STONECYPHER)

The output of the potentiometer transmitter is a 4-20 mA process control current which is the standard input for most data loggers.

<u>NOTE</u>: The multiple position borehole extensometer retrofitting, using tensioning wires manufactured by Terrametrics, is described in para. III-2-4.

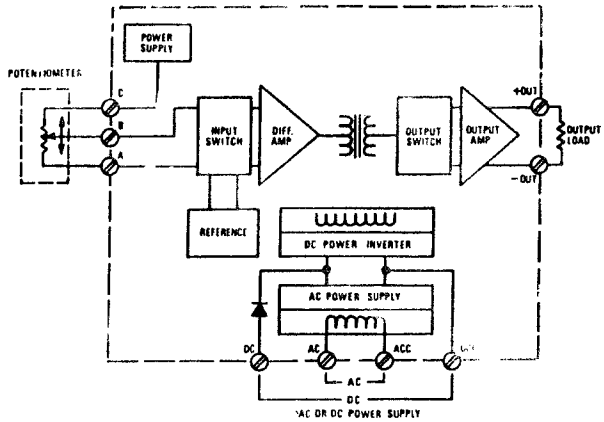

FIGURE 11. BLOCK DIAGRAM POTENTIOMETER TRANSMITTER

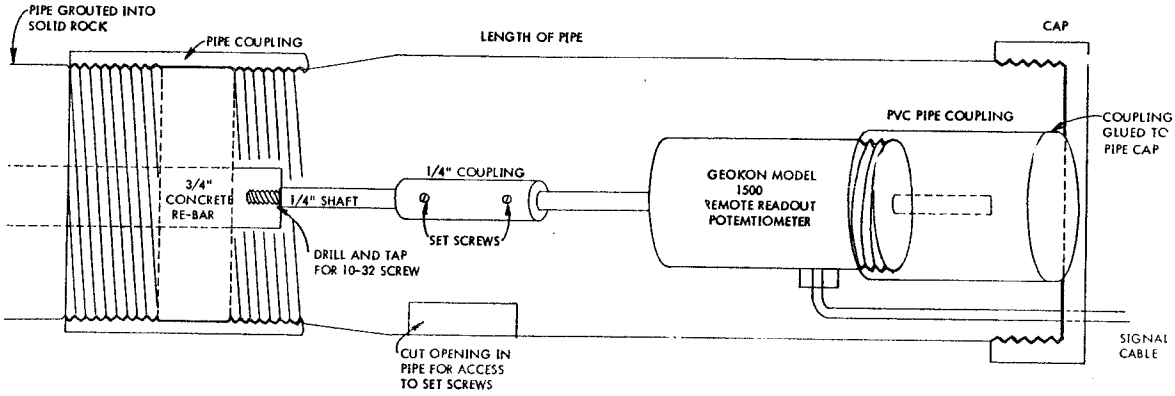

FIGURE 12. CUSTOM BUILT EXTENSOMETER MEASURING DEVICE

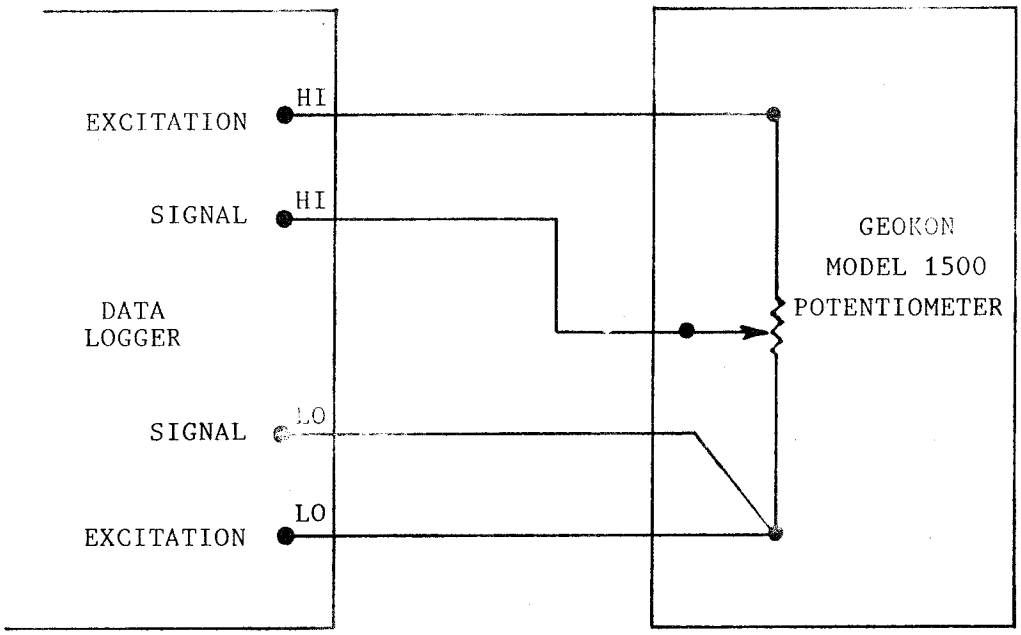

FIGURE 13. FOUR WIRE POTENTIOMETER CONNECTION

Inclinometer

III-4-1. The current method of making inclinometer measurements consists of lowering an inclinometer down a borehole to fixed depths and recording the two axes data at each depth. To aid in the automation of this task, there are several new instruments on the market. For continuous or automatic monitoring purposes, an in-place inclinometer system is available from Slope Indicator, Company. In-place inclinometers may be monitored either manually or automatically. The manual system consists of one or more sensors, a read-out station and portable indicator. Automatic systems consist of one or more sensors, a junction box, power supply, and a data logger. Options include alarms and transmission of data to remote locations via telephone lines. For safety or engineering purposes, the alarm option automatically generates an alarm when movement of any individual sensor exceeds a preset threshold.

III-4-2. Up to sixteen in-place inclinometers may be placed in an existing inclinometer casing. The user may space the inclinometers at any interval desired with gage length tubing. Refer to the Instrumentation section of this manual, para. III-4-4, for more detailed information on the in-place inclinometer system. The major disadvantage of this system is the high cost of the multiple sensors.

III-4-3. The description of a method to automate the task of lowering and raising an inclinometer sensor to incremental depths in a standpipe and acquiring tilt data at each increment is described below in paragraphs III-4-4 through III-4-10.
NOTE: The described system is not commercially available as a complete system, but the various parts can be purchased or built.

III-4-4. Some of the components are covered in Parts II and IV of this report. The paragraphs are given below. For the items

which are not covered, the part number, manufacturer, address, and phone number are listed so that more information may be obtained if required.

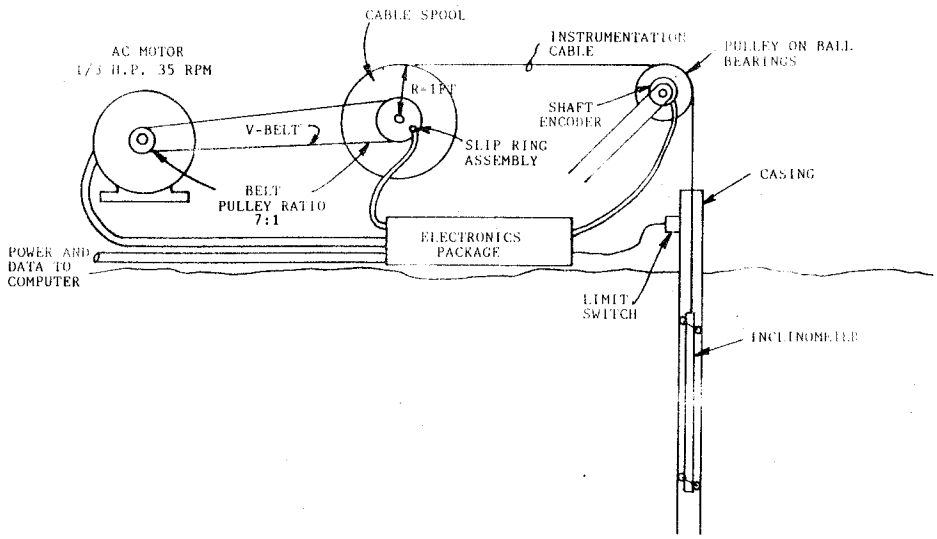

FIGURE 14. AUTOMATIC INCLINOMETER SYSTEM COMPONENTS

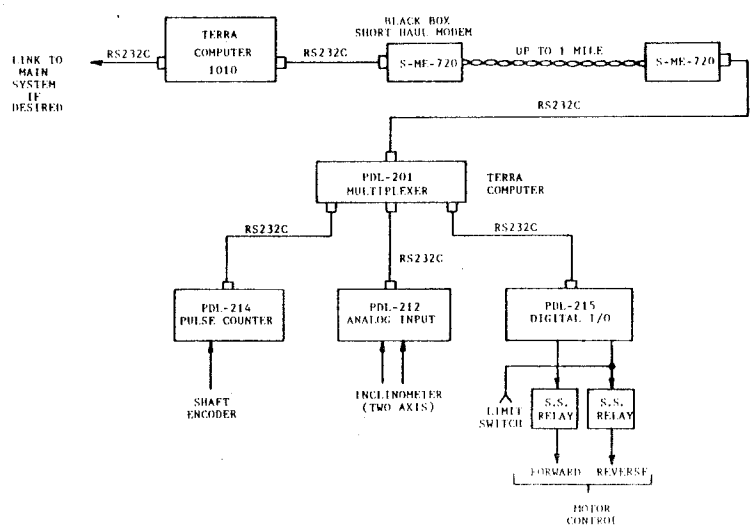

FIGURE 15. AUTOMATIC INCLINOMETER SYSTEM BLOCK DIAGRAM

III-4-5. Refer to Figure 14, Automatic Inclinometer System Components, and Figure 15, Automatic Inclinometer System Block Diagram, as the following components are discussed. The hardware components of the system are:

a. 1/3 hp electric motor, model number 699 with options: motor-mounted fail-safe brake and environmentally protected.
Manufacturer: B & B Motor & Control Corp.
15534 West Hardy Road
Houston, TX 77060
(Phone) (713) 820-7931

b. Cable spool. Capacity: 350 ft. 0.42 in. O.D. cable. Approximately two feet in diameter. Slip ring assembly for 6-conductor cable. V-belt pulley and support frame.
Manufacturer: Must be custom made. Slip ring assembly may be available from: Airflyte Electronics Co.
New Hook Rd.
Bayonne, New Jersey 07002
(Phone) (201) 436-2230

c. Shaft encoder, model number 651 with options: 100 contacts/revolution, 6-pin MS connector, single-ended, connector down, shaft horizontal, HD2-heavy duty with shaft seal.
Manufacturer: Encoder Products Co.
P.O. Box 1548
1601 B Dover Rd.
Sandpoint, ID 83864-0868
(Phone) (208) 263-8541

d. Inclinometer and cable, user-supplied. Any standard inclinometer with no more than six conductors will work. Paragraphs II-7-1 through II-7-5 discuss several.

e. Limit switch, model number 1SE3. SPST - Normally open.
Manufacturer: Micro Switch
5115 South Valley Highway
Englewood, Colorado 80111
(Phone) (303) 779-6439

f. Data acquisition unit, model number 1010 with options. PDL-201 multiplexer, PDL-212 analog input, PDL-214 pulse counter, and PDL-215 digital I/O.
Manufacturer: Terra Computer Systems
Refer to paras. IV-2-23 and IV-14-13 in this report.

g. Modems, model number S-ME720. Short haul modem, two required.
Manufacturer: Black Box Catalog
Refer to para. IV-18-1 in this report.

h. Solid state relay, model number 615-1. Optically isolated, zero voltage turn-on, 10 amp.
<u>Manufacturer</u>: Teledyne Solid State Products
12525 Daphne Ave.
Hawthorne, CA 90250
(Phone) (213) 777-0077

III-4-6. The Terra Computer 1010, paragraphs III-2-23 and IV-14-13 will act as the motor controller and data acquisition unit. A custom program has to be written to drive the motor and keep track of the probe position. As the probe is lowered into the casing, the pulley will turn the shaft encoder. The shaft encoder generates 100 pulses per revolution. If a six-inch diameter pulley is used, the circumference of the pulley will be 18.85 in. The shaft encoder pulse will be equal to 0.188 in. of cable. The PDL-214 module is a pulse-counting module which will keep track of the shaft encoder pulses. The probe will be lowered until the pulse count equals the distance desired. At this time, the Terra 1010 will output a digital word which clears the forward bit and opens the solid state relay supplying AC power to the motor. A power-off brake will automatically stop the motor.

III-4-7. The Terra 1010 will read the inclinometer probe readings for both axes and store them away with the depth number. This data is read in through the PDL-212 Analog Input Module. After the readings are complete, the Terra 1010 will output another digital output word to start the motor running in the forward direction until the next depth is reached. This continues until all the test depths have been read.

III-4-8. The current design of this system allows for 350 feet of cable to be used. Less cable can easily be used for shorter standpipes, but longer cables will require a larger motor to handle the additional weight of the cable down the borehole. When the readings have been completed, the motor is reversed and will retract the cable from the borehole and rewind the reel.

The probe will actuate the limit switch near the top of the casing which will automatically shut off the solid state relay. It is important that this limit switch be installed properly and wired to directly turn off power to the motor in case of a computer failure.

III-4-9. The probe will move in both directions at the same speed. This speed is adjustable by pulley size ratios. The configuration in Figure 14 has a ratio of 7:1, which will result in the reel turning at 5 RPM. The circumference of a two-foot reel is 75.4 in. Therefore, the probe will be raised and lowered 6.3 in. per second. A 350-ft. rewind will take 11 min.

III-4-10. The reel will probably need to be custom-built. A slip ring assembly is required to transfer the six conductor signals from the reel cable to the cable going to the data acquisition unit. The slip rings need to be environmentally sealed and must have a very low resistance due to the low-level signals being transferred.

III-4-11. Another instrument which may be helpful in automating the job of taking inclinometer measurements is the model 50368 recorder-processor-printer (RPP) also manufactured by Slope Indicator Company. Refer to the Instrumentation section for specifications in para. II-7-3. The RPP automates the task of recording the data, but still requires personnel to lower the sensor to the proper depths in the standpipe. The RPP records the data onto cassette tape when instructed to by the operator. The measurement is also displayed on a LCD for quick verification of readings. After all the readings are recorded, the instrument may be taken back to the office and the data downloaded to a data processing system via an EIA RS-232-C communications port. This device also prints out the data or prints out a graph of the results. This device offers the maximum amount of automation for the price.

III-4-12. A third instrument worth mentioning, also manufactured by Slope Indicator Company, is the Slope Indicator, model 1000 inclinometer. Refer to the Instrumentation section, para. II-7-2, for specifications. This device consists of an inclinometer sensor, cable, and an electronic clipboard with two LCDs. Both axis angles are displayed and may be easily transposed to the clipboard field data sheet. The calculation of the angle and the ease of copying the numbers reduces the errors that field personnel may induce. This system is by far the lowest cost. All of the above proposed systems use existing standpipes and inclinometer casings. Various sizes of interchangeable guide wheels permit the user to adapt to any standard size inclinometer casing.

Inverted Plumb Lines

III-5-1. The automated instrumentation that reads the movement of inverted plumblines is the same as that for hanging plumblines and is covered starting at paragraph III-8-1.

Optical Plummets

III-6-1. The optical plummet works on the principle of line-of-sight readings down a vertical shaft in a concrete structure. This shaft is lined with targets at various intervals throughout its length. The optical plummet is placed on a mounting ring at the top of the shaft, and the operator sights down the shaft to the various targets.

III-6-2. The automation of this instrument may be accomplished in one of two ways. The first method of automation is to replace the optical plummet with a plumb line and an automated plumb line monitoring system. This system is described in detail in the Instrumentation section of this manual, para. II-2-3. This method is the only one currently established to fully automate this procedure to permit unmanned readings of the data. The second proposed method is to use a Hewlett-Packard model 75D hand-held computer which is carried to the site and used as an electronic notebook. The optical bar code reader should also be used. This method requires the operator to take readings with the optical plummet, and which greatly reduces the task of calculating and presenting the data. The calculator may be programmed to identify the site via the bar code reader and store the date and time. The computer then prompts the operator to take a reading on the first target. These data are keyed in by the operator. The computer then calculates the movement from either the last reading or the initial installation readings by using the angle and measurement. Data can be compared with the last reading and will indicate an alarm if a big delta exists between values. This feature would detect operator error or a real change which could be a safety hazard. All the information is stored in memory. The operator keeps on entering data for all the targets. Once the operator is finished taking field measurements, he dumps the data from the HP 75D hand-held

computer to the computer in the office. The HP 75D is included in the ADP section of this manual, paras. IV-2-13 and IV-8-2.

III-6-3. The software program described herein is not commercially available, but may be written by personnel with a working knowledge of BASIC. The program may be used at any site, and may further be entered into the computer by using magnetic cards. The initial installation data and site ID bar codes may also be entered in the same manner.

Peak-Reading Accelerometers

III-7-1. The peak-reading accelerometers are used as supplemental instruments to the strong-motion accelerographs. The four main features which make the peak-reading accelerometers attractive to use are:

a. They record a higher gravity (g) force, in case of a large earthquake, than the strong-motion accelerometers.

b. They are lower cost, and allow devices to be used where needed on structures, or elsewhere.

c. They require no maintenance.

d. They require no power.

III-7-2. The recording media of the peak-reading accelerometer may be either a magnetic tape chip, or a metal plate. The current method of reading the tape chip or metal plate is done visually with the data entered on a data sheet.

III-7-3. Automating the data acquisition of this instrument may defeat the major reasons for using it. If the application justifies the additional cost, another method may be implemented. The peak-reading accelerometer may be replaced with a digital cassette accelerograph, model DCA-333, manufactured by Terra-Technology. The digital cassette accelerograph is described in para. II-12-5.

III-7-4. The resultant data recorded using this system should contain much more information than the peak-recording accelerometer. Time code markings are recorded in addition to the amplitude of the accelerometers. One should note that peak-reading accelerometers have ranges up to 5 g's. The digital cassette accelerograph should also be ordered with the 5-g

option. The tapes of the cassette accelerographs may be played back on the portable playback/plotter model SMR-104 manufactured by Terra-Technology. The playback unit has an EIA RS-232-C interface which may be connected into any data processing system with an EIA RS-232-C interface capability. Refer to para. IV-6-10.

Plumb Lines

III-8-1. The following recommended automatic plumb line monitoring system works only in a 10-in. diameter or larger plumbline well. The installation of this system does not require any modifications to the existing plumb line assembly. This device works on inverted or noninverted plumb lines and may be installed on any horizontal surface; both ceiling and platform mounts. The system is designed to work in conjunction with a manual position-reading system that may be present in an existing structure or planned for a new installation.

III-8-2. The device is called the automated plumb line monitoring system manufactured by Spectron Engineering. The specifications for this instrument are in para. II-2-3 of this manual. The sensor contains no moving parts so there is no component wear and no routine maintenance or calibration required.

III-8-3. A remote repeater box may be used to drive long cables. Up to 12 plumb line sensors may be attached to the controller box. The controller box contains a keyboard and CRT display. It also contains an EIA RS-232-C port to permit communications to a host computer. Various software routines are available to aid in the use of this device.

Pore Pressure Instruments

III-9-1. The pore pressure cell is used for various measurements on Army Corps of Engineers' structures. The cells are used to measure uplift, concrete pore pressure, foundation rock uplift, and soil pressures. The cells are basically used anywhere water pressure needs to be measured in a granular material. The type of pore pressure cells being used are the Carlson pore pressure cells, manufactured by Carlson Instruments and Terrametrics; the PWS and PWP pore pressure cell, manufactured by IRAD Gage; PE series electric piezometer, manufactured by Terra Technology, Inc.; and Gloetzel pressure cells, manufactured by Terrametrics. These cells all have a porous disk which allows the water pressure to seep in and cause a deflection on the internal diaphragm. From this point on, the cells vary in the method by which that deflection is measured.

III-9-2. The Carlson gage outputs a dual resistance which may be measured on a data acquisition system using one of several different methods. These methods are explained in detail in Appendix B of this manual. The method selected is normally determined by what other types of gages are being measured and what fits the overall hardware configuration.

III-9-3. The IRAD gage models PWS and PWP are vibrating wire type outputs. These cells require special signal conditioning which provides an excitation "pluck" voltage to the cell. Several manufacturers, such as Acurex and Geotechnical Engineering and Mining Services, Inc. (GEMS), provide vibrating wire inputs into an automated data acquisition system. Refer to para. IV-14-2 for the Acurex Netpac system, and to para. IV-15-3 for the GEMS Terratrac system. The additional cabling from the terminal junction

box to the data logger system has no impact on the measurement accuracy.

III-9-4. The PE series electric piezometers made by Terra Technology (refer to para. II-10-6) use an internal strain gage for detecting the movement of the diaphragm. This type cell may be read by any automated data logger which has strain gage type signal conditioning inputs. The effects of additional cable resistance may be overcome by ensuring that there are sufficient conductors in the cable to allow separate wires for the excitation voltage and sense leads.

III-9-5. The Gloetzel pressure cell made by Terrametrics is a pneumatic type cell which requires pressurized gas and various valves and pressure transducers to make a measurement. The automation of data acquisition from these type cells may be accomplished by using the PDA-840 pneumatic piezometer data acquisition system made by Geotechnical Engineering and Mining Services, Inc. (GEMS). This system is a stand-alone unit that automatically controls the nitrogen flow and valving to accurately monitor all types of pneumatic sensors. More information on the PDA-840 system is available in para. IV-15-5 of this manual.

Precise Alignment Instruments

Theodolite Alignment

III-10-1. The present method of data collection using the conventional theodolite involves repeatedly placing a movable target into the line of sight of the theodolite. Eight readings of the target vernier calipers are obtained for each sighting, and the average of these readings is interpreted as the correct reading. Since precise manual adjustments are required, this method of alignment measurement does not lend itself to automation. However, the electronic notebook, described in para. IV-8-2, may be used to store the readings of each sighting and then later on, these readings or the averages of these readings may be transferred to any computer with an RS-232-C interfacing capability. The electronic notebook electronically simulates the data sheet used by the field technician. It prompts him to the type of measurement required at that particular time and stores the reading in its memory. When the measurements are complete, the unit is brought in from the field and connected to a computer. The data contained in the notebook memory are then entered into the computer for analysis.

III-10-2. Another method for making alignment measurements involves replacing the conventional theodolite with a digital theodolite and a companion electronic distance measurer (EDM). Two such units, one manufactured by Pentax Corporation and the other by Wild Heerbrugg are described in paras. II-2-2 and II-2-4, respectively. The measurement procedure requires the field technician to establish a reference line of sight with the theodolite. The technician then focuses on the alignment target and takes a reading. The theodolite determines the precise angle of deviation of the target from the reference line of sight. The companion EDM, in turn, determines the precise distance the target is from the theodolite. These readings along with user-entered identifying information are stored in a digital recorder

unit. When the readings are complete, the information stored in the recorder unit is entered into a computer via an RS-232-C port. All necessary alignment information may be extracted from these readings using simple triangulation laws.

III-10-3. For applications where a computer may be located nearby, the Wild Heerbrugg unit has a special interface that permits the digital theodolite keyboard functions to be controlled by a remote computer. Using this interface, data may be transferred into a computer for processing immediately after the reading is taken. Figure 16 shows the configuration of the system using the recorder method of data collection and transfer. Figure 17 shows the configuration of the Wild Heerbrugg system using an interface that lets the computer control the theodolite.

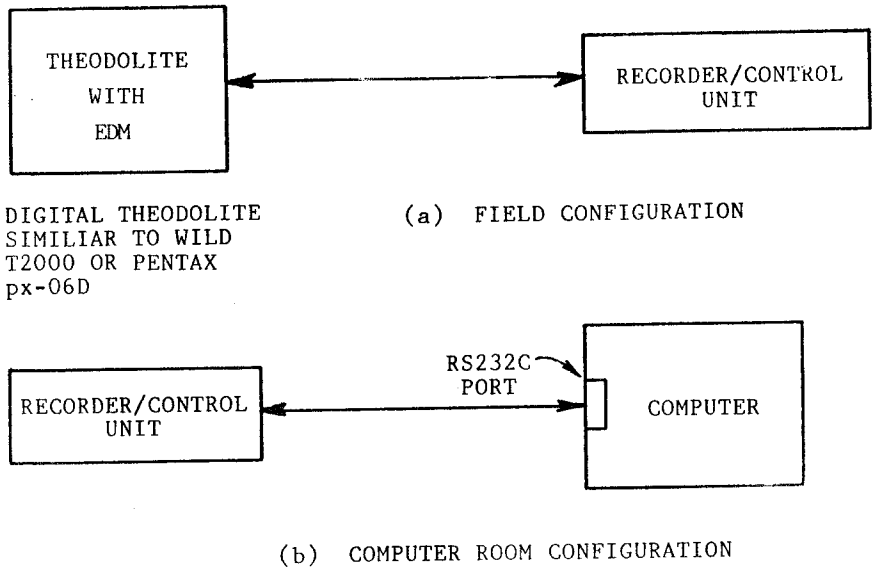

FIGURE 16. THEODOLITE USING RECORDER/CONTROL UNIT

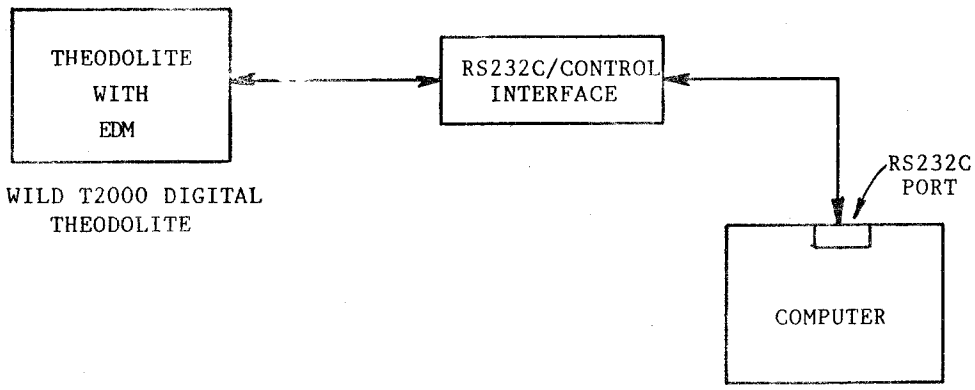

FIGURE 17. THEODOLITE USING COMPUTER CONTROL

Precise Distance Measuring Instruments

III-11-1. Electronic distance measurement (EDM) instruments generally consist of a source instrument, which houses the measuring apparatus and the read-out portion of the instrument, a reflector prism assembly used as a target, and associated reference monuments. The level of automation of these instruments depends upon the type of readout employed by the unit in use. Most older EDMs provide only a visual readout and require a field technician to prepare a data sheet for each reading. The information supplied by these types of instruments cannot be directly entered into a computer without severe modification to the instrument. It is suggested that the electronic notebook, described in this manual in para. IV-8-2, be used to facilitate that transfer of data obtained from these units to a computer. The electronic notebook electronically simulates the data sheet used by the field technician. The technician, through prompts from the notebook, enters in the data obtained from the visual display of the instrument. These data are stored in the notebook until all the readings are completed. The unit is then brought in from the field where the data are transferred to a computer via RS-232-C, in a quick and orderly manner.

III-11-2. The newer EDMs are equipped with their own data recorder. To operate these, the field technician merely has to align the unit with the target, enter any reading identifying information into the data recorder, and then take a reading. The data obtained from the instrument is automatically stored into the data recorder along with its user-supplied identifying information. When all of the field readings are complete, the data recorder is disconnected from the EDM, connected to the RS-232-C port of a computer, and the data is transferred into the computer for processing. Two such units, one manufactured by

Pentax Corporation and the other by Wild Heerbrugg are described in paras. II-2-2 and II-2-4, respectively.

III-11-3. For applications where a computer may be located nearby, the Wild Heerbrugg unit has a special interface that permits the EDM to be controlled by a computer. Using this interface, data may be transferred into a computer for processing immediately after a reading is taken. Since these units are used in conjunction with theodolites, Figure 16, digital theodolite configuration using recorder/control unit, and Figure 17, Wild T2000 digital theodolite configuration using computer control, depict two possible configurations of these units.

Precise Leveling Instruments

Tilt meters

III-12-1. Tilt meters are used when the horizontal or vertical tilt of a surface at a particular point is of interest. Generally, tilt meters are used in situations where the failure mode of a structure or another similar mass is expected to contain a rotational component. One type of tiltmeter that is fairly easy to automate is the Digitilt tilt meter manufactured by Slope Indicator Corporation. This device is described in para. II-8-1 of this manual. Essentially, the Digitilt tiltmeter consists of a closed loop, force-balanced servo accelerometer, mounted with the sensitive axis perpendicular to the surface of a plate mounted on the structure to be measured. Figure 18 shows a block diagram of a servo accelerometer.

III-12-2. The inertial mass is acted upon by the acceleration input, in this case gravity, and ultimately causes the DC amplifier to produce an output. The feed-back circuit induces the torque generator to apply a restoring force to the inertial mass. When these forces are equal, the circuit stabilizes and the output E_o is proportional to the acceleration input and consequently the degree of tilt. Data sheets are provided by the manufacturer for output versus tilt correspondence. The output of the device, E_o, may be monitored by an analog input channel of a data logger or some other voltage measuring system. The device, however, does require a DC excitation voltage that must come from the data logger or some other external source.

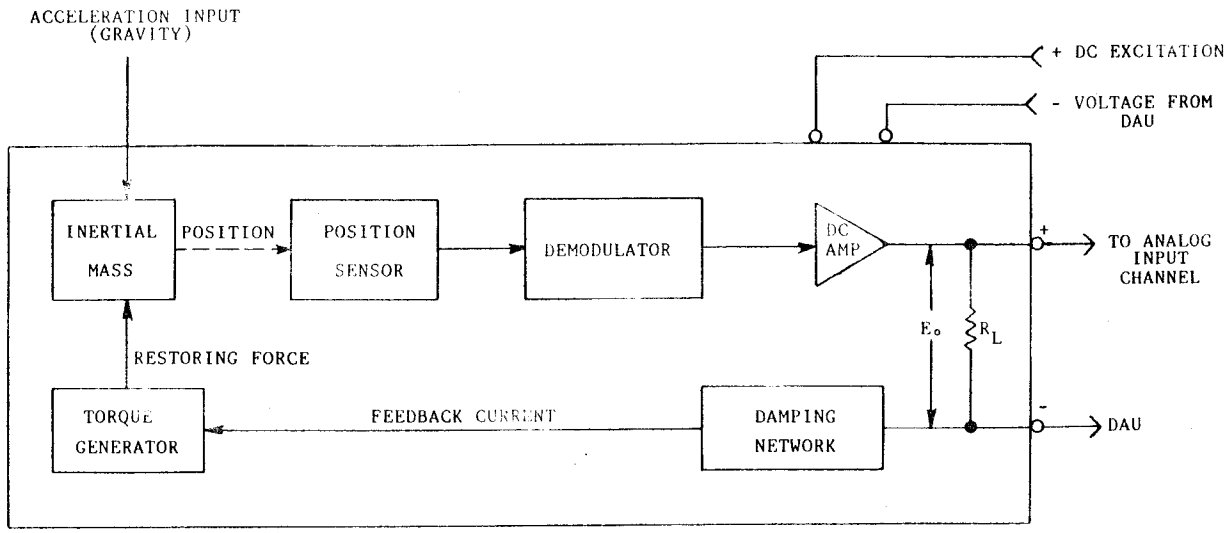

FIGURE 18. BLOCK DIAGRAM OF SERVO ACCELEROMETER

Geodetic Leveling

III-12-3. This type of leveling requires the field technician to perform sensitive manual adjustments to the leveling apparatus and to monitor an optical micrometer to obtain valid data. He must focus a telescope onto a staff and perform delicate adjustments until a precise measurement can be read from the leveling device. Since precise manual adjustments that may only be monitored optically by the operator are required, this procedure does not lend itself to automation. However, use of the electronic notebook, described in para. IV-8-2 may be used to store the readings of each sighting, and then, these readings may be transferred to a computer with an RS-232-C interfacing capability. The electronic notebook electronically simulates the data sheet used by the field technician. It prompts him to the type of measurement required at that particular time and stores the reading in its memory. When the measurements are complete,

the unit is brought in from the field and connected to a computer. The data contained in the notebook memory is then entered into the computer for analysis.

Seepage Measuring Devices

III-13-1. There are numerous ways of measuring seepage and leakage from foundation drains, joint drains, and face drains. Of the many techniques available for monitoring open-channel flows, depth-related methods are the most common. These techniques presume that the instantaneous flow rate may be determined from a measurement of the water depth, or head. Weirs operate on the principle that an obstruction in a channel causes water to back up, creating a high-level head behind the barrier. The head is a function of flow velocity; and also the flow rate through the device. Weirs consist of vertical plates with sharp crests. The top of the plate may be straight or notched. Weirs are classified in accordance with the shape of the notch. The basic types are vee-notch, rectangular, and trapezoidal. A vee-notch weir is shown in Figure 19. The height of the water surface behind a weir is a function of the discharge through the weir, so level measurement techniques are used with the equipment to determine flow rate. Currently, the most common method used is a marked staff which has the water level markings on it. The measurement is made by visually reading the staff level and calculating the flow rate using the appropriate formula.

III-13-2. The automation of the weir measurement may be done in several ways. One way, in a case where the weir is located in a remote location, is to use the weir level data logger, model PWL-47 manufactured by Geotechnical Engineering and Mining Services, Inc. Refer to para. II-11-2 for more information on the weir-level data logger. This data logger is housed in a weatherproof enclosure and is battery powered. A depth sensor transducer is placed in the upstream side of the weir. The data logger is preprogrammed to acquire data at set intervals and also to do the appropriate weir level conversion-to-flow algorithms. The operator uses an HP 41CX hand-held computer to interface with the data logger and to transfer the

stored data. Once the data are in the HP 41CX, they may either be dumped to a data processing system or be printed out on a printer.

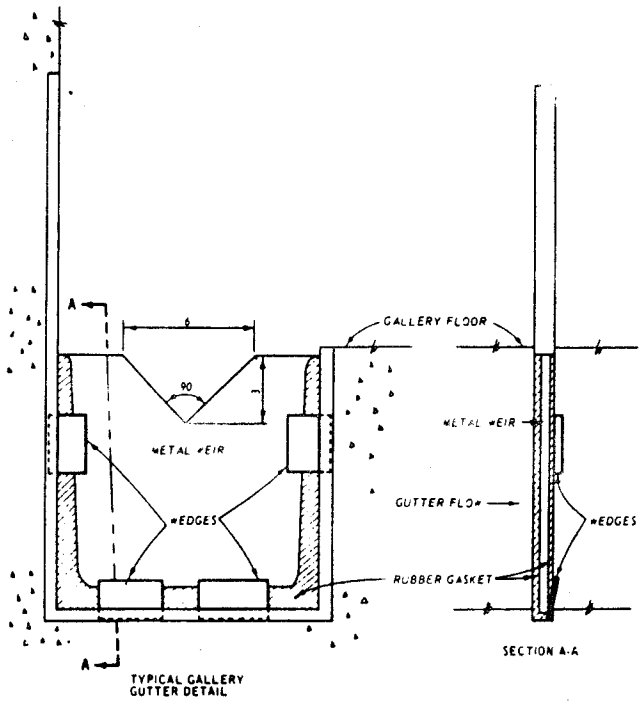

FIGURE 19. VEE-NOTCH WEIR

III-13-3. In cases where the weir is located within 500 ft. of the data acquisition system, a typical strain gage type pressure transducer such as the Druck model 110/D or PTX 160/D may be used to constantly monitor the water flow. Refer to para. II-18-3 for more information on the PTX 110 and 160. The output of both models PTX 110 and 160 is a 4-20 mA process current which is compatible with most data loggers and data acquisition systems. Other water pressure transducers are available, such as the model 4500s vibrating wire pressure transducer manufactured by Geokon, Inc. Refer to para. II-18-2 of this manual for more information on the model 4500s.

III-13-4. Other methods of measuring seepage and leakage deal with on-off operation of sump pumps and the capacity of the sump pump. In the past, gathering this timing information has

been done by hand. One method to automate this on-off measurement is to sense the motor current via a current clamp. Any type of current clamp used for sensing current flow in a conductor may be used. The model 1003AM1 AC current sensor manufactured by American Aerospace Controls, Inc., 570 Smith Street, Farmingdale, NY, 11735, phone (516) 694-5100, will work for this application. The current clamp should be placed on either the hot lead or the neutral lead of the motor input AC power. The current clamp leads should be wired into a 0 to 5 volt input to a data acquisition system. The data acquisition system needs to run continuously or at least be run at fixed intervals of time. The resultant data allows the user to determine the amount of time the sump pump motor ran during a 12- or 24-hr period. This information along with the sump pump capacity rating permits the user to calculate the total volume of leakage.

Strain Meters

III-14-1. The existing strain meters used by the U.S. Army Corp of Engineers are of the following types:

Carlson Elastic Wire Strain Meter
Carlson Miniature Strain Meter
Whittemore Mechanical Strain Gage
Mechanical Scratch Gage
Ailtech Strain Gage
IRAD Vibrating Wire Strain Gage
Monfore Standardizing Strain Gage
Linear Variable Differential Transformers
Resistance Strain Gage

The Carlson elastic wire strain meter and the Carlson miniature strain meter both measure a change in length by the changing electrical resistance of the elastic wire coils. Refer to Figures 20 and 21 for the internal working mechanism of the gages.

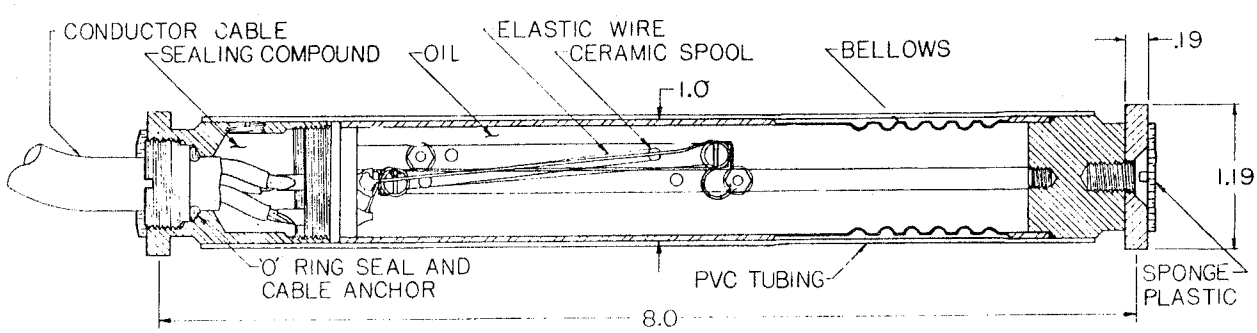

FIGURE 20. CARLSON ELASTIC WIRE STRAIN METER
(COURTESY CARLSON INSTRUMENT CO.)

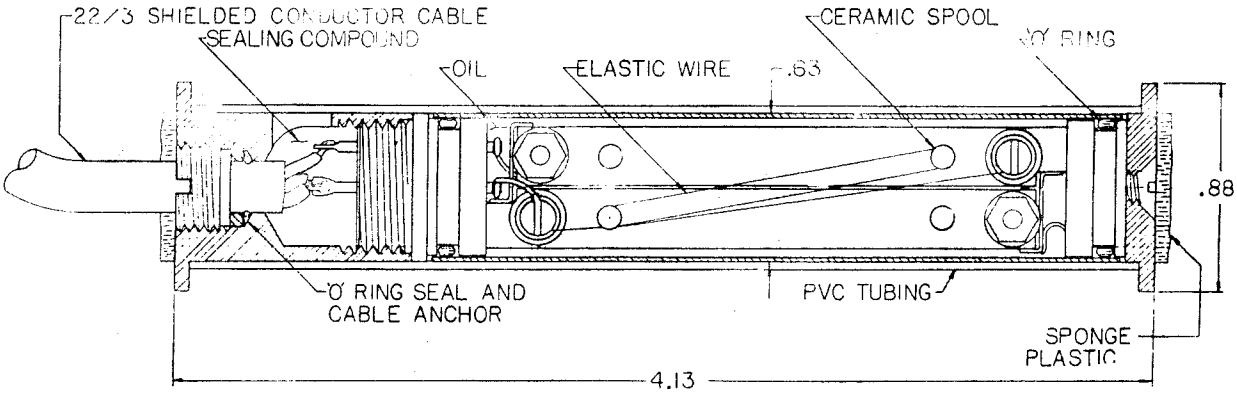

FIGURE 21. CARLSON MINIATURE STRAIN METER
(COURTESY CARLSON INSTRUMENT CO.)

III-14-2. The Carlson gage outputs a dual resistance which may be measured on a data acquisition system using one of several different methods. These methods are explained in detail in Appendix B of this report. The method selected is normally determined by what other types of gages being measured and what fits the overall hardware configuration.

III-14-3. The Whittemore mechanical strain gage and the mechanical scratch gage are both manually read devices which may not be automated.

III-14-4. The Ailtech embeddable strain gage, see Figure 16, may be automated using either a one-quarter or one-half bridge completion network and power supply. The units come in 60-, 120-, or 360-ohm active units. The bridge completion network and excitation voltage is a standard option on just about every data acquisition unit described in this report.

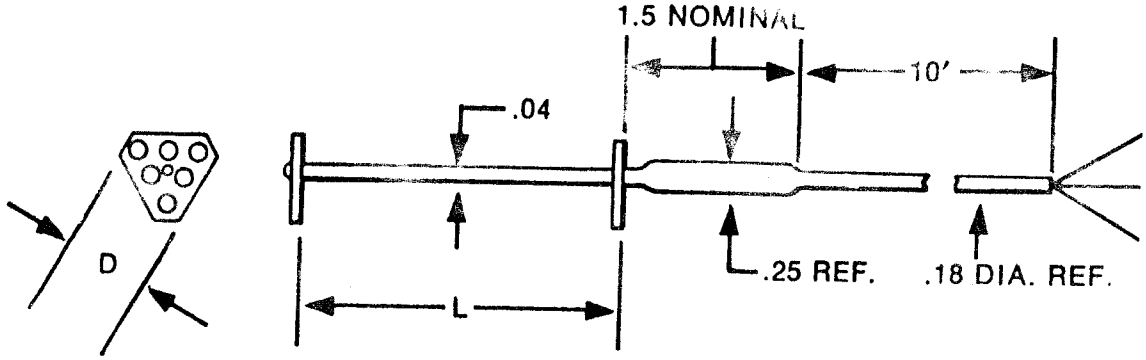

MODEL	D	L
CG2-129	.68	2.00 ±.02
CG4-129	.87	4.00 ±.03
CG6-129	.87	6.00 ±.03

FIGURE 22. AILTECH EMBEDDABLE STRAIN GAGES
(COURTESY EATON CORP.)

III-14-5. Figures 23 and 24 illustrate the connection of a one-quarter bridge or a one active arm bridge, and a one-half bridge or a two active arm bridge.

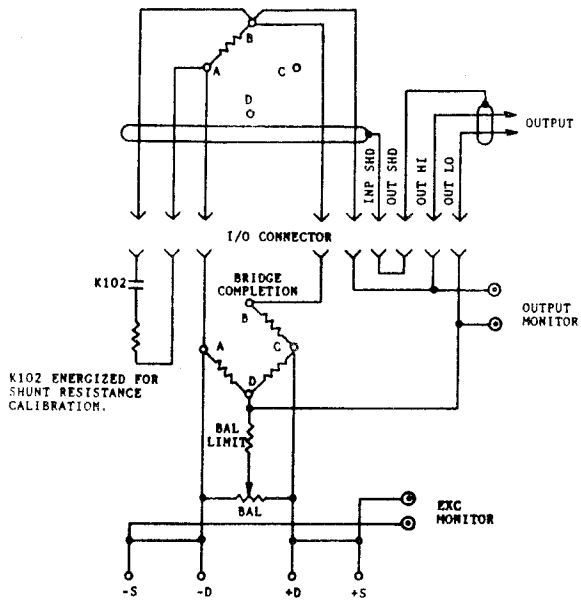

FIGURE 23. ONE ACTIVE ARM BRIDGE

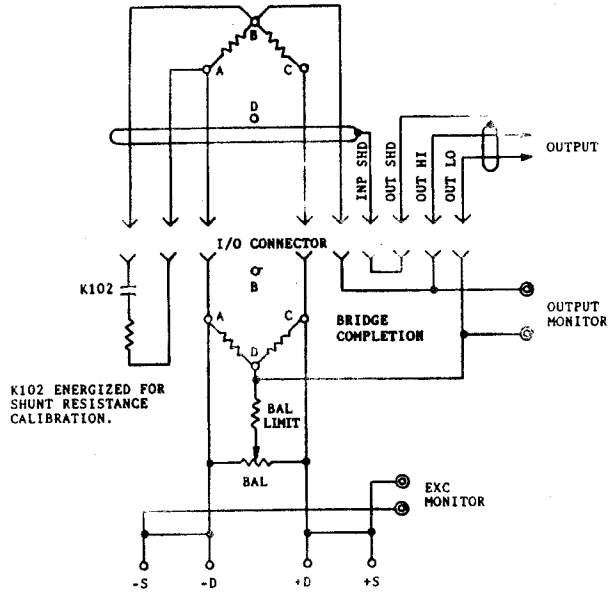

FIGURE 24. TWO ACTIVE ARM BRIDGE

III-14-6. The IRAD vibrating wire strain gage comes in two models. One attaches externally to the concrete and one is embeddable (Figure 22). The IRAD gage requires special signal conditioning which provides an excitation "pluck" voltage to the gage. Several manufacturers, such as Acurex and Geotechnical Engineering and Mining Services, Inc. (GEMS), provide vibrating wire inputs into an automated data acquisition system. Refer to para. IV-14-2 for the Acurex Netpac system, and to para. IV-15-3 for the GEMS Terratrac system. The additional cabling from the terminal junction box to the data logger system has no impact on the measurement accuracy. Refer to Figure 25 for a typical vibrating wire cable connection to the data acquisition system. The data acquisition system generates a voltage pulse containing a spectrum of frequencies spanning the natural frequency range of the wire. When the signal reaches the coil/magnet assembly mounted inside the gage, and when one of the input frequencies coincides with the natural frequency of the wire, the wire vibrates and continues to vibrate after the input signal ceases. A voltage is then generated in the coil at a frequency corresponding to that of the wire as it vibrates in the field of

the coil/magnet assembly. This constant frequency signal generated by the gage is timed by a high precision reference to generate the measurement frequency.

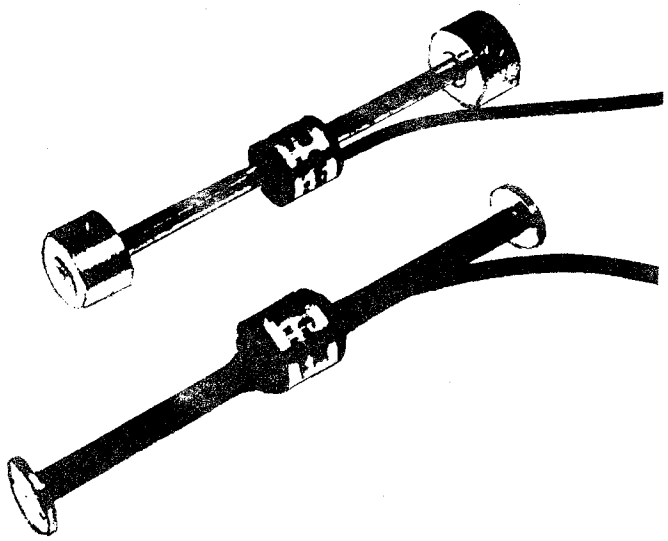

FIGURE 25. VIBRATING WIRE STRAIN GAGES
(COURTESY IRAD GAGE COMPANY)

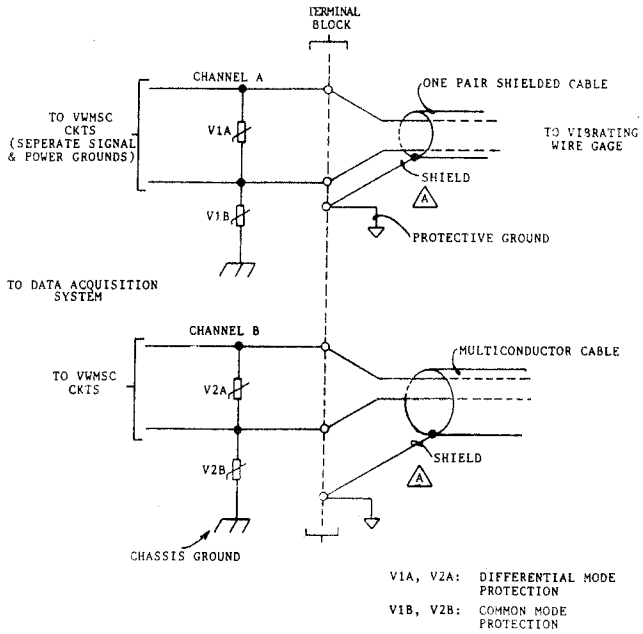

FIGURE 26. TYPICAL VIBRATING WIRE CABLE CONNECTION

III-14-7. The Monfore standardizing strain gage uses an elastic wire and a change in resistance to indicate the distance between two points. Refer to Figure 27.

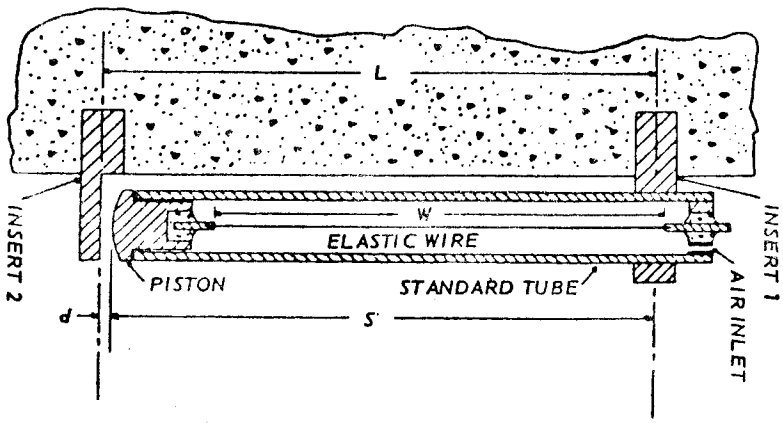

FIGURE 27. MONFORE STANDARDIZING STRAIN GAGE

The gage is activated by applying 16 psi air pressure to the valve. The internal piston moves until it comes to rest against the stop. The gage measures strain by monitoring changes in length from the standard position to the extended position. The output of the gage may be read by a one-active-arm bridge (refer to Figure 23). The pressure of 16 psi has to be controlled constantly for use with an automated data acquisition system. This pressure control may be a problem, depending upon the source of the pressure.

III-14-8. The linear variable differential transformer (LVDT) strain meter used by the Army Corps of Engineers comes in two models, a DC version and an AC version. The AC models require an external exciter-demodulator signal conditioning module. The output of the signal conditioner produces a filtered

DC output signal precisely proportional to mechanical input, over the full plus and minus range of the transducer (Figure 28). To retrofit the AC model, which has the signal conditioning module, the two wire DC output signal is input to any high-level analog input channel of a data logger or data acquisition system.

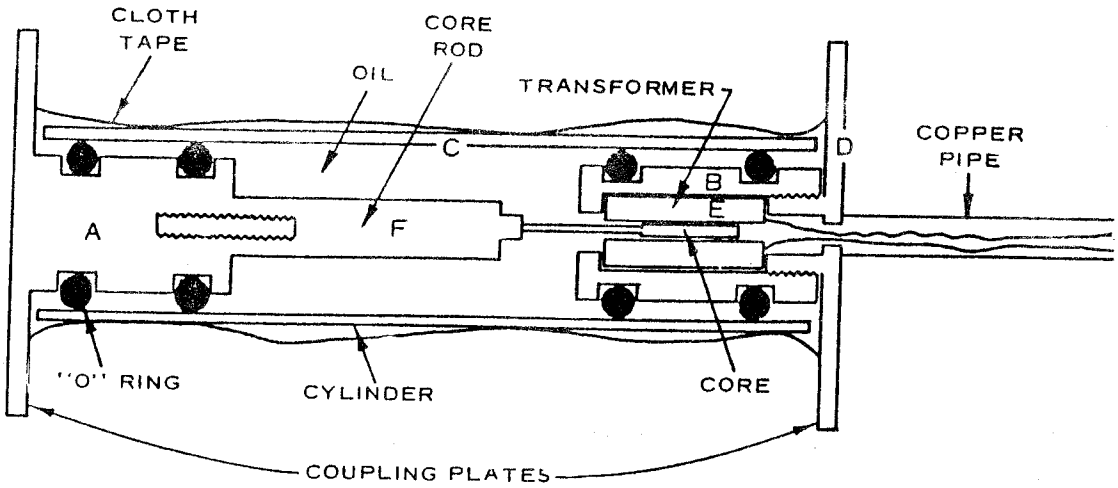

FIGURE 28. LINEAR VARIABLE DIFFERENTIAL TRANSFORMER STRAIN METER

The voltage level of the signal conditioner output must be matched to the data acquisition input channel. If a signal conditioner is not available for the AC LVDT, then refer to para. IV-17-5 of this report to the IEM/CAS signal conditioner manufactured by Schaevitz Engineering. This unit is a carrier amplifier type conditioner packaged in a NEMA-12 enclosure. The output of the IEM/CAS is a 4-20 mA process current loop which is compatible with most data logger inputs. Figure 29 shows a block diagram of the IEM/CAS.

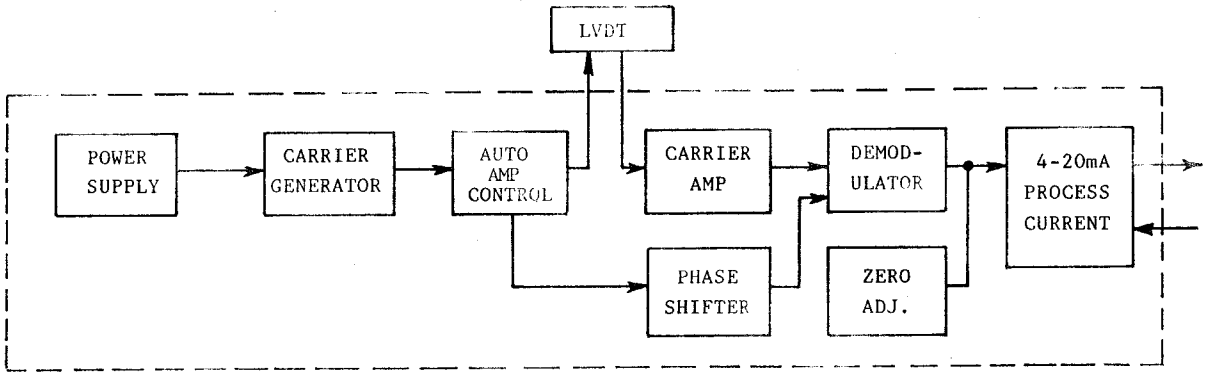

FIGURE 29. BLOCK DIAGRAM OF A CARRIER AMPLIFIER TYPE SIGNAL CONDITIONER SYSTEM

III-14-9. The DC LVDT (Figure 30) has the signal conditioning built into its housing. A DC power supply is normally input to the DC LVDT and the resultant analog voltage on the output is applied to the data acquisition system. The voltage output is a two-wire, normally high-level analog signal. The exact output voltage range of the LVDT must be matched to the data acquisition system input.

III-14-10. The resistance strain gage used by the Army Corp of Engineers may be easily adapted into the automated data acquisition system. The single element resistive gage may be read by using a one-active-arm bridge completion signal conditioning. This is available on practically all of the data loggers and data acquisition systems described in the ADP section of this report.

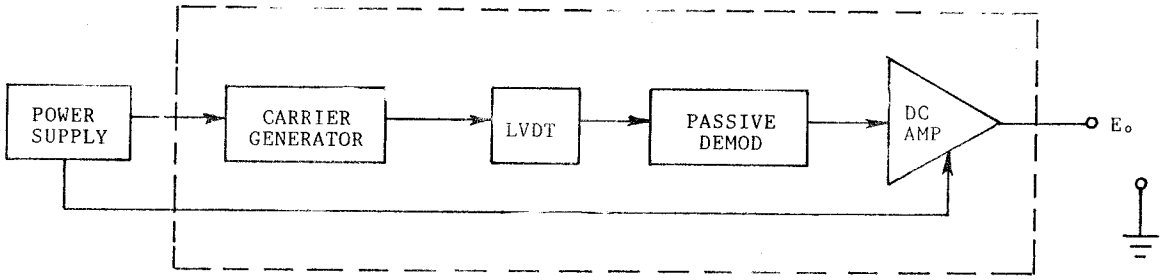

FIGURE 30. BLOCK DIAGRAM OF A DC AMPLIFIER TYPE SIGNAL CONDITIONING SYSTEM

Stress Meters

III-15-1. The following types of stress meters are currently among those being used by the Army Corps of Engineers: Carlson Stress Meter, WES Pressure Cell, Gloetzel Pressure Cell, and Vibrating Wire Stress Meter. The Carlson stress meter (Figure 31) is an embeddable device which measures compressive stress in concrete. The Carlson gage outputs a dual resistance which may be measured on a data acquisition system using one of several different methods. These methods are explained in detail in Appendix B of this report. The method selected is normally determined by what other types of gages are being measured and what fits the overall hardware configuration.

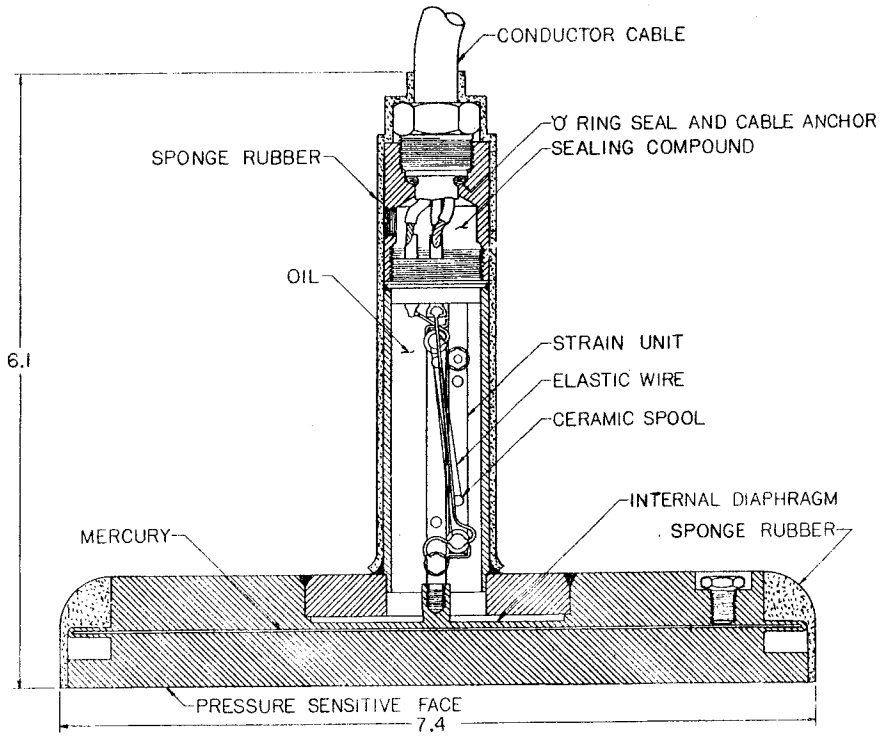

FIGURE 31. CARLSON STRESS METER
(COURTESY CARLSON INSTRUMENT CO.)

III-15-2. The WES pressure gage (Figure 32) uses a bonded strain gage to measure the deformation of a central flexible plate. Another bonded strain gage in the same gage is mounted on

an unstressed surface and measures the effect of thermal changes. This gage easily adapts to automated data acquisition by use of two active arm bridge signal conditioning. This is a common option on most data acquisition and data logger systems. Figure 24 is a typical schematic representation of a two active arm bridge configuration.

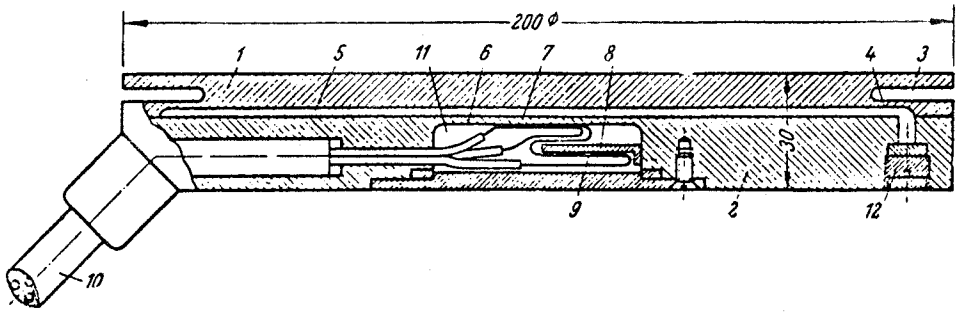

FIGURE 32. WES PRESSURE GAGE

III-15-3. The Gloetzel pressure cell (Figure 33) is a pneumatic instrument which measures direct stress. This cell uses two pneumatic lines and pressurized gas to make the measurement. The automation of this device has been accomplished by the Geotechnical Engineering and Mining Services, Inc., (GEMS) with a model PDA-840 pneumatic piezometer data acquisition system. This system controls the scan of these cells by opening

and closing the various valves required to make a measurement. The PDA-840 may be used as a stand-alone unit which stores up to 100 scans of data or may be connected into any data processing system via the two RS-232-C ports or HP-IL interface. This device is described in detail in para. IV-15-5 of this report.

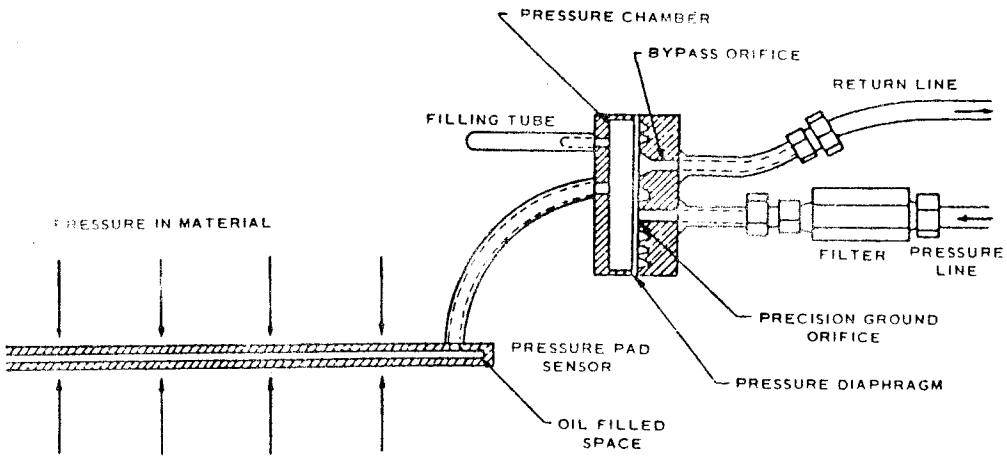

FIGURE 33. GLOETZEL PRESSURE CELL
(COURTESY SINCO)

III-15-4. One of the vibrating wire stress meters currently used by the Army Corps of Engineers is manufactured by IRAD Gage, Inc. Several other manufacturers build the same type of stress meter and can be substituted for the IRAD gage. The IRAD gage requires special signal conditioning which provides an excitation "pluck" voltage to the gage. The data acquisition system generates a voltage pulse containing a spectrum of frequencies spanning the natural frequency range of the wire. When the signal reaches the coil/magnet assembly mounted inside the gage and when one of the input frequencies coincides with the natural frequency of the wire, the wire vibrates and continues to vibrate after the input signal has ceased. A voltage is then generated in the coil at a frequency corresponding to that of the

wire as it vibrates in the field of the coil/magnet assembly. This constant frequency signal generated by the gage is timed by a high precision reference to generate the measurement frequency. Several manufacturers such as Acurex and Geotechnical Engineering and Mining Services, Inc. (GEMS), provide vibrating wire inputs into an automated data acquisition system. Refer to para. IV-14-2 for the Acurex Netpac system, and to para. IV-15-3 for the GEMS Terratrac system. The additional cabling from the terminal junction box to the data logger system has no impact on the measurement accuracy. Refer to Figure 26 for a typical vibrating wire cable connection to the data acquisition system.

Strong Motion Accelerometers

III-16-1. The strong motion accelerometers are used to measure ground acceleration and structural response from strong and local earth movements. The nature of the data being recorded requires that reliable, self-contained systems record the data on a permanent storage medium. During an earthquake, power lines may be downed as well as the cable runs to any remote sensors. The recording of these data is critical to the engineer analyzing the structural integrity of the structure after a seismic event. If the data are lost due to equipment problems, there is no way to recover them.

III-16-2. The acceleration with a time reference is normally measured and recorded in all three axes. These devices are referred to as strong motion accelerographs.

III-16-3. The existing accelerographs installed at the Corps of Engineering sites include the following:

Model RFT-350,manufactured by Teledyne-Geotech
Model SMA-1, manufactured by Kinemetrics
USC & GS standard accelerograph

The first two items, Model RFT-350 and Model SMA-1, use either an omnidirectional or directional triggering device which has a presettable threshold. The recording media for both of these devices is 70-mm photographic film. The third device, USC & GS instrument, records data on a photo-paper. There are two approaches that may be taken in automating these instruments.

III-16-4. The first approach does not affect the existing hardware or procedures for collecting data. It does however, ease the burden of entering data into an automated processing system. This method requires the use of a digitizing tablet. The model 91480 CalComp digitizing tablet manufactured by

California Computer Products, Inc. is recommended for use in this application. More information on the model 91480 may be found in the ADP section of this report in para. IV-8-1. The 70-mm photographic film may be enlarged four times and is approximately equivalent to the 12-in.-wide photo paper used in the USC & GS standard. The enlarged film or photo paper may be placed on the digitizing tablet and the signal traced with a hand-held cursor. The position of the cursor is digitized and output via an EIA RS-232-C port to a data processing system. Software is available from Kinemetrics to operate with the digitized data to perform various baseline corrections and calibrations.

III-16-5. The second approach for automating the strong motion accelerographs requires replacing existing equipment with newer equipment. This is not a problem mechanically, since the instruments are not embedded or fastened down in any manner. The replacement instruments may be either a model DSA-1 strong motion accelerograph manufactured by Kinemetrics or a model DCA-333 digital cassette accelerograph manufactured by Terra Technology.

III-16-6. Additional information on both of these devices may be found in the Instrumentation section of this report, paras. II-12-1 and 5, respectively. The recommended instruments both remain in an idle state until triggered by seismic activity. The trigger level is presettable by the user. Both units digitize the analog signal from the accelerometer and record it onto a cassette tape. Along with these data, the ID number of the device is recorded, and also the NBS WWV timing marks or reference timing marks. External triggering is also a feature if desirable to start all the recorders on any one being triggered. An external alarm is generated to alert the user to the fact some seismic activity occurred. At this time, the user has to collect the cassette tape from the field for playback into the data processing system. A digital playback system is required for inputting the data into a data processing system. The data are

transferred over an RS-232-C link. Refer to the ADP section, paras. IV-6-5 and 10 for specifications on the digital playback system.

III-16-7. When specifying new accelerographs, ensure selection of proper sensitivity for the application intended. The new units require the same power as the units they are replacing. Optional solar panel chargers are available for use in remote sites. Internal batteries permit the units to operate up to five days after a loss of power.

Temperature Measurement Devices

III-17-1. For instrumentation of concrete structures, there are several temperature measurement devices used by the COE. All of these devices are easily adaptable to an automated system. Carlson strain meters, stress meters, pore pressure cells, and joint meters may be used to measure temperature as described in Appendix B of this report. Note that the three-wire meters do not compensate for lead resistance in the resistance temperature measurement, while the four-wire meters do compensate for lead resistance.

III-17-2. The Carlson resistance thermometer model TF1, manufactured by the Carlson Instruments and described in para. II-15-7 of this report, may be connected to a bridge completion circuit as shown in Figure 34. Almost all data loggers and data acquisition systems have optional bridge completion circuits which may be connected to a Carlson resistance thermometer. However, unless the lead resistance can be accurately measured or can balance the bridge, the three-wire Carlson resistance thermometer is not an accurate method for measuring absolute temperature when using a bridge circuit.

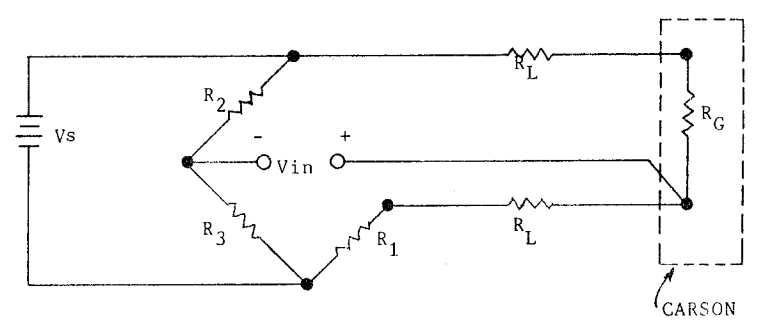

Vin MUST BE HIGH IMPEDANCE METER $R_2=R_3$

$R_G=R_1\left(\frac{Vs-2Vin}{Vs+2Vin}\right)$

R_G = THERMAL RESISTANCE R_1, R_2, R_3 = BRIDGE RESISTORS

Vs = EXCITATION VOLTAGE

R_L = LEAD RESISTANCE

Vin = VOLTAGE INPUT

FIGURE 34. BRIDGE COMPLETION CIRCUIT

III-17-3. A better method for reading the Carlson resistance thermometer is to use a 3-wire compensation amplifier as shown in Figure 35. This compensation amplifier allows a direct resistance reading of a Carlson resistance thermometer with compensation for the lead resistance and may be found on the Fluke 2280B with option 163 (RTD resistance scanner) as described in para. IV-15-4 of this report.

III-17-4. The thermocouple is also used for temperature measurements. The thermocouple described in paras. II-15-1 and 4 of this report may be connected to almost all data loggers and data acquisition systems. These systems have optional thermocouple input circuits for several types of thermocouples, and some even have programmable selection of thermocouple types.

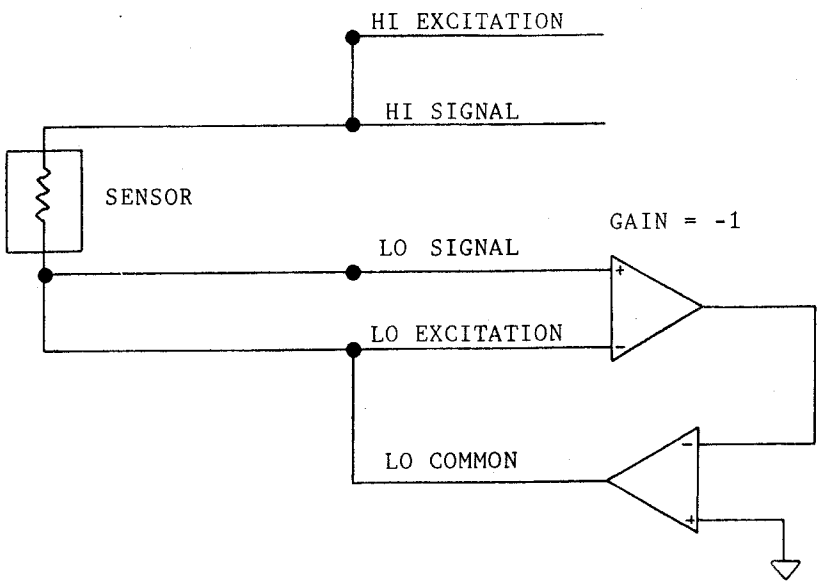

FIGURE 35. 3-WIRE COMPENSATION AMPLIFIER

Uplift Cells

III-18-1. There are two types of uplift cells currently in use by the Army Corps of Engineers: one is the standpipe type, and the other is the diaphragm type. The standpipe type is discussed first.

III-18-2. The standpipe type cell may be measured by one of two methods. In one case, the water pressure head at the cell is less than the gage elevation, therefore, a sounding to the water surface must be done from the gage elevation to determine the elevation of the water in the standpipe. The current methods for measuring water level include electronic water level indicators, which are lowered until they come in contact with the water and the cable length is read. Also, the newer vibrating wire piezometer, which is lowered past the lowest level ever recorded and left at that point, allowing the pressure to be read using a remote readout box. To retrofit this application, the manually lowered water level indicators do not work. The vibrating wire piezometer works quite well with the data logger systems proposed, which have the vibrating wire inputs. Refer to the retrofitting of water level indicating devices in para. III-17-3 for more information.

III-18-3. The other method for measuring standpipe pressure may be used when a water pressure does exist at all times at the gage elevation. Currently, dial type gages are used for measuring this pressure. For automation of this measurement, the dial gages must be replaced with pressure transducers which screw directly into the pipe fitting from which the gages come. Refer to para. II-16-3 of this report for more information on pressure transducers used for measuring uplift.

III-18-4. The second type of uplift cells is the diaphragm type. This type cell is a transducer which is buried and

covered in the area in which the uplift measurement is to be made. These diaphragm cells are also called pore pressure cells or simply pressure cells. Some of the cells more commonly used by the COE are the Carlson pore pressure cell, the Gloetzel pressure cell and the IRAD vibrating wire piezometer. Retrofitting each of these devices may be accomplished by ensuring that the data acquisition system has the appropriate signal conditioning to accept these inputs. Each instrument is explained separately below.

III-18-5. The Carlson gage outputs a dual resistance which may be measured on a data acquisition system using one of several different methods. These methods are explained in detail in Appendix B of this report. The method selected is normally determined by what other types of gages are being measured and what fits the overall hardware configuration.

III-18-6. The Gloetzel pressure cell is a pneumatic piezometer which uses two pneumatic lines for measurement. The automation of this device has been accomplished by Geotechnical Engineering and Mining Services, Inc. (GEMS) with a model PDA-840 pneumatic piezometer data acquisition system. This system controls the scan of these cells by opening and closing the various valves required to make a measurement. The PDA-840 may be used as a stand-alone unit which stores up to 100 scans of data or may be tied into any data processing system via the two EIA RS-232-C ports or an HP-IL interface. This device is described in detail in para. IV-15-5.

III-18-7. The vibrating wire piezometer, used as a pressure measuring device for uplift, may be automated using one of two possible data loggers; the Terratrac data logger manufactured by GEMS, or the Netpac series 43000 and 84000 manufactured by Acurex Corporation. Both of these units are described in more detail in paras. IV-14-2 and IV-15-3, respectively.

Water Level Indicating Devices

III-19-1. The older water level indicators, such as the Soiltest model DR-760A, require personnel to lower a weighted probe assembly into a borehole. When the probe contacts the water, continuity is established and the ammeter indicator deflects from 0 to full scale. The marked cable is then read to determine the water level. This type of instrument cannot be automated, but may be replaced by lowering a piezometer to a fixed point and measuring head pressure directly with an automated data acquisition system. Several different types of piezometers may be used for this application.

III-19-2. The vibrating wire piezometer has been used successfully by the COE for retrofitting standpipe installations. The model 4500S pressure transducer, manufactured by Geokon, Inc., is described in more detail in para. II-18-2 of this report. Figure 26, shows a typical vibrating wire cable connection. The types of data acquisition systems capable of reading vibrating wire inputs are the Acurex Netpac system and the GEMS Terratrac system described in paras. IV-14-2 and IV-15-3.

III-19-3. The data acquisition system generates a voltage pulse containing a spectrum of frequencies spanning the natural frequency range of the wire. When the signal reaches the coil/magnet assembly mounted inside the gage and when one of the input frequencies coincides with the natural frequency of the wire, the wire vibrates and continues to vibrate after the input signal ceases. A voltage is then generated in the coil at a frequency corresponding to that of the wire as it vibrates in the field of the coil/magnet assembly. The constant frequency signal generated by the gage is timed by a high precision reference to generate the measurement frequency.

III-19-4. Another type of piezometer is the Druck, Inc., model PDCR 10/D described in para. II-18-1. This pressure transducer uses an integrated silicon strain gage bridge circuit for measuring pressure. Signal conditioning is required with this device also. Druck manufactures a type DPI201 pressure indicator which provides excitation, signal conditioning, and amplification along with several types of outputs. Refer to Figure 36, for a block diagram of this pressure indicator.

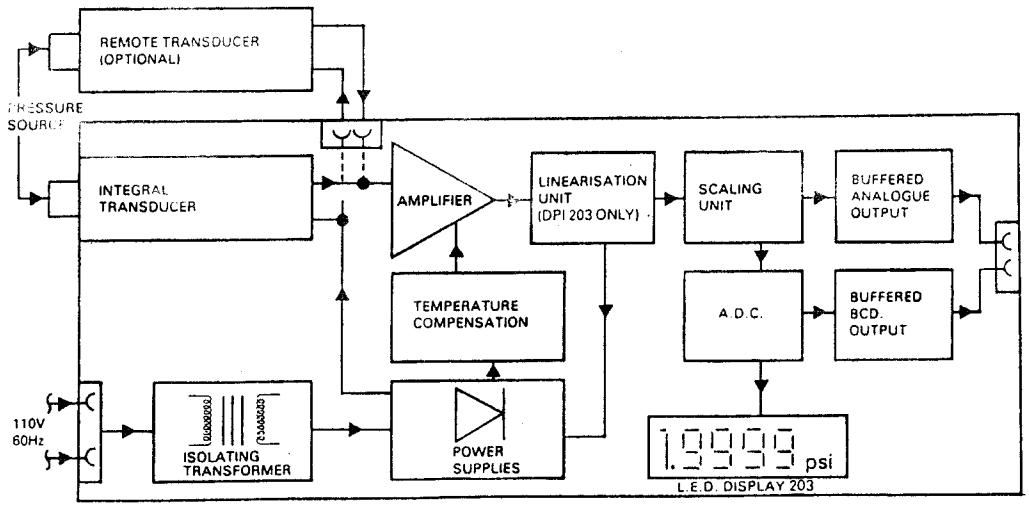

FIGURE 36. PRESSURE INDICATOR BLOCK DIAGRAM

A DPI201 pressure indicator is not required if the data acquisition system has signal conditioning which accepts bridge-completion type transducers.

PART IV: AUTOMATED DATA PROCESSING EQUIPMENT

General

IV-1-1. This part deals with the various automated data processing (ADP) hardware which acquires, processes, and outputs data taken from instrumentation located on or in concrete structures. The automated data processing (ADP) hardware is grouped by the function it performs and is listed in descending order of system functionality.

IV-1-2. The type and description of each piece of equipment is given in the following paragraphs, as well as all the information outlined below.

a. Model

b. Manufacturer

c. Pricing information

d. Operation

e. Prerequisites

f. Input specifications

g. Output specifications

h. Interfacing

i. Power requirements and recommendations

j. Compatible equipment

k. Software available

l. Environmental conditions

m. Application information

n. Comments

IV-1-3. This part also contains items which are not ADP equipment, but are required to support the use of the ADP equipment. Examples of nonADP equipment include signal conditioners and power units.

IV-1-4. The equipment listed spans the entire range of available ADP hardware from full-scale minicomputers capable of processing multiple tasks to a simple data logger which records and stores several channels of sensor data. Some of the items have software packages which the user may use to simplify the task of integrating the system. Other items require the user to generate commands over a communication port to control the operation of the item. As an example, the minicomputer system has an operating system software package available which allows the user to access a whole array of various peripherals, such as disk drives, magnetic tape units, EIA RS-232-C controllers, and terminals. A terminal does not have a software package, and must communicate with the host system by means of commands transmitted over the EIA RS-232-C interface port.

IV-1-5. Refer to the Technical Report, "Instrumentation Automation Techniques" (Report 1, Section III) for guidance in selecting the proper system components to meet the requirements set forth in the systems requirement document.

IV-1-6. Due to the complexity of some of the equipment described in this part, only the most pertinent information is presented to aid the user in making a selection. More detailed information may be obtained from the manufacturer/vendor files maintained by the U. S. Army Engineers Waterways Experiment Station, Vicksburg, Mississippi.

Central Processing Units

IV-2-1. **Type and description: Computer, personal.** The Macintosh is a 16-/32-bit Motorola MC68000 microprocessor-based computer that weighs 23 pounds. It includes 128 kbytes of main memory, 64 kbytes of ROM (which stores the operating system), an integral 9-in. screen, 3-1/2 in. 400 kbyte microdiskette drive, detached 58-key keyboard, mouse, learning manuals, and audio cassette.

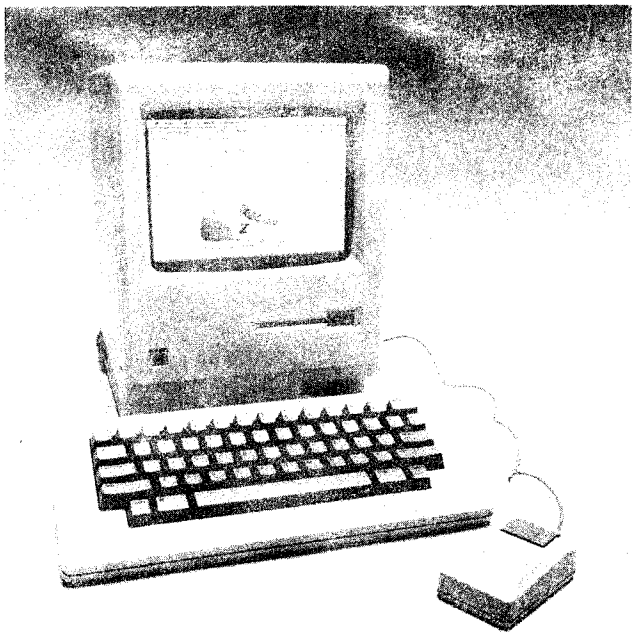

MACINTOSH PC (PHOTO COURTESY OF APPLE COMPUTER CO.)

a. Model: Apple Macintosh

b. Manufacturer: Apple Computer, Inc.
20525 Mariani Ave.
Cupertino, CA 95014
(Phone) (408) 996-1010

c. Pricing: $2,495.00

d. Operation: The Macintosh is a fully self-contained computer system that uses a proprietary operating

system. It is operated and programmed through the keyboard.

e. Prerequisites: None.

f. Input specifications: EIA RS-232-C/RS-422.

g. Output specifications: Same as input.

h. Interfacing: The Macintosh may be interfaced to any device that uses EIA RS-232-C or RS-422 serial communications ports.

i. Power requirements and recommendations: 120 VAC.

j. Compatible equipment: Apple Imagewriter dot matrix printer and Apple modem 300/1200 modems.

k. Software available: BASIC and Pascal. MACQUISITION data acquisition program (Refer to report 3," Available Data Collection and Reduction Software" para. V-1-24).

l. Environmental conditions: Not available.

m. Application information: Graphics, spreadsheet, word processing, management, and sciences.

n. Comments: Maintenance support can be provided by any qualified Apple dealer. A 90-day warranty is given.

IV-2-2. **Type and description: Computer, Personal.** The Apple IIc is powered by a Motorola MC65C02 8-bit microprocessor with 128k bytes of memory, integral 140 kbyte half-height 5 1/4-inch diskette drive, low profile keyboard, 8 expansion slots, RF modulator and power pack. The monitor is not included in system cost. Memory is expandable up to 1-Mbyte. The Apple IIe contains the 6502A processor.

a. Model: Apple IIc and Apple IIe

b. Manufacturer: Apple Computer, Inc.
20525 Mariani Ave
Cupertino, CA 95014
(Phone) (408) 996-1010

c. Pricing: Apple IIc $1,295.00 (w/128k RAM)
Apple IIe $895.00 (w/64k RAM)

d. Operation: The Apple IIc is a 7.5-pound transportable unit with a switchable 40- or 80-column display to use with an 80-column monitor or standard TV at 40 columns. It supports one work station and is operated and programmed through the 63-key typewriter-style keyboard. The older Apple IIe is less portable, but its operation is basically the same as the IIc.

e. Prerequisites: Monitor or standard TV set.

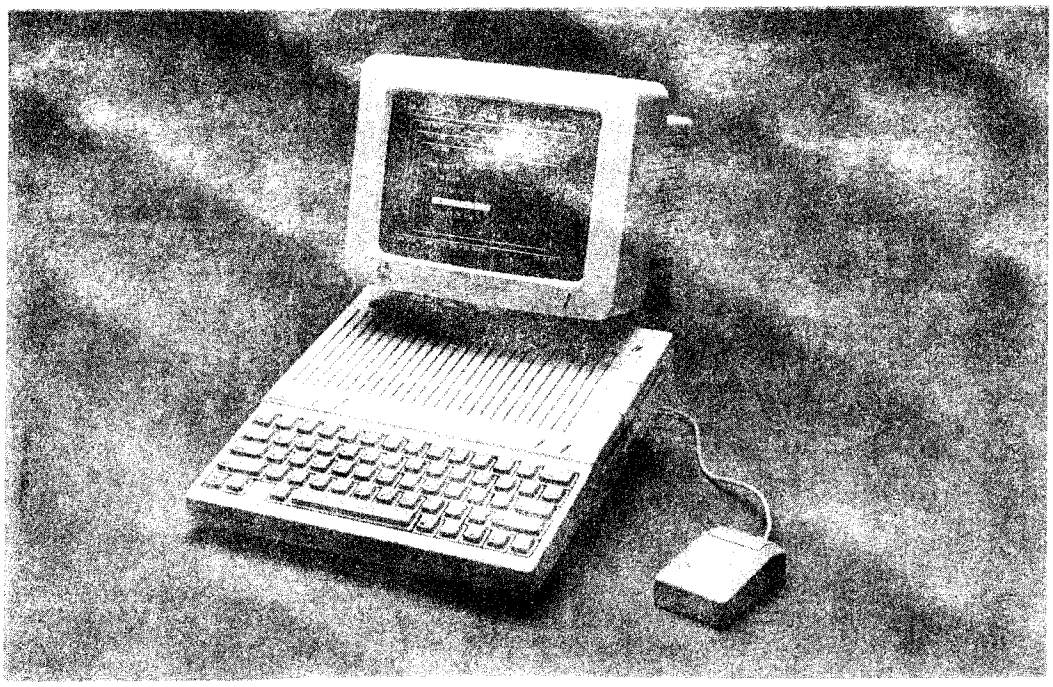

APPLE IIE (PHOTO COURTESY OF APPLE COMPUTER CO.)

f. Input specifications: EIA RS-232-C (two integral serial ports) and others with available options.

g. Output specifications: Same as input specifications.

h. Interfacing: A broad selection of interfaces, analog-to-digital converters, digital-to-analog converters, and IEEE-488 cards are available from Apple and third-party vendors.

i. Power requirements and recommendations: Not available.

j. Compatible equipment: A full line of peripherals is available and Apple II-compatible data acquisition

systems are available from third-party vendors (MDB Systems, ACTION Instruments, National Instruments, etc.).

k. Software available: DOS 3.3 operating system; BASIC, Pascal, LOGO, COBOL, FORTRAN, and any other language written for personal computers. A huge selection of application and utilities programs is available from third-party vendors as well as public domain.

l. Environmental conditions: Not available.

m. Application information: Data acquisition and data reduction, graphics, spreadsheet, database management, word processing, education.

n. Comments: One of the most highly used computer systems and which is supported by 20,000 programs and accessories. Systems and options are sold in retail stores. There is a 90-day warranty on parts and labor.

IV-2-3. **Type and description: Computer, personal.** The PC 6300 is a stand-alone personal computer or an intelligent workstation, which is easily integrated into an existing communications environment. It is based on the Intel 8086 16-bit microprocessor, which processes information almost twice as fast as the Intel 8088 microprocessor found in the IBM PC/XT. A proprietary mode delivers graphics of 640 by 400 in monochrome and color as well as emulation of the IBM graphics modes. There are six expansion slots resident on a diskette-based PC 6300 as opposed to five slots available on the IBM PC; the PC XT houses eight, whereas a disk-based PC 6300 makes available only six expansion slots. Main memory is 128 kbytes, expandable to 640 kbytes. The PC 6300 has a 360-kbyte diskette drive and a 10-Mbyte hard disk. It supports one workstation. NOTE: This information is subject to change without notice.

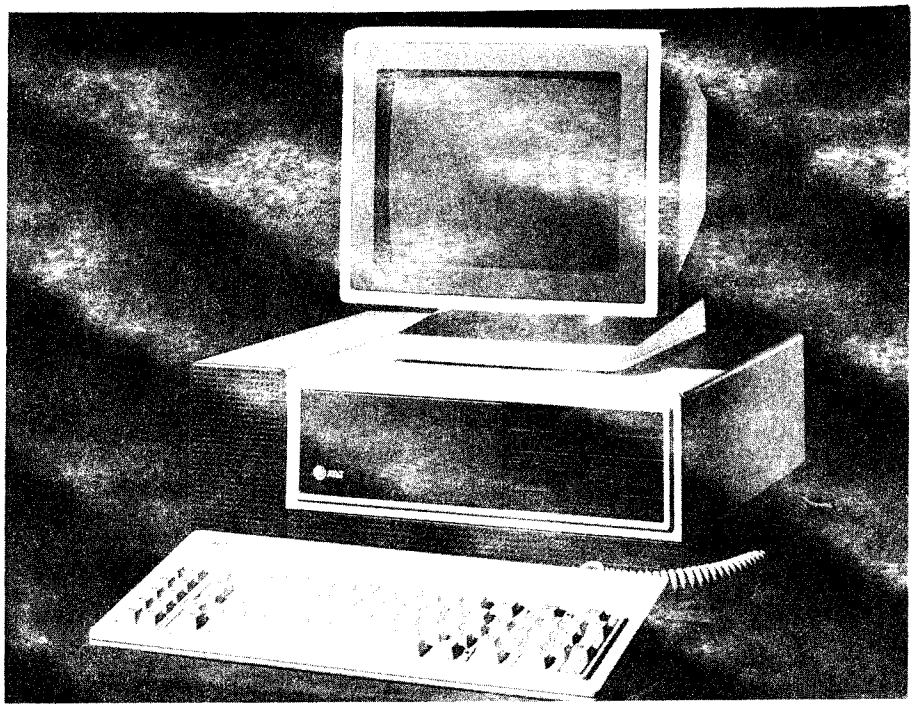

PC 6300 (PHOTO COURTESY OF AT&T INFORMATION SYSTEMS, INC.)

a. Model: PC 6300

b. Manufacturer: AT&T Information Systems, Inc.
One Speedwell Avenue
Morristown, NJ 07960
(Phone) (800) 922-0354

c. Pricing: Not Available.

d. Operation: The AT&T PC 6300 supports MS-DOS and concurrent PC-DOS operating systems. The system is operated through an 83-key keyboard and a 12-inch monochrome or 13-inch color (depends on model PC purchased) display.

e. Prerequisites: Stand-alone system.

f. Input specifications: RS-232-C serial data up to 19.2 kbaud.

g. Output specifications: RS-232-C serial data up to 19.2 kbaud and 8-bit parallel Centronics-type.

h. Interfacing: One RS-232-C port and one Centronics-type port are included with system. A wide range of compatible interfaces and adapters are available from third party vendors.

i. Power requirements and recommendations: 115 VAC (90-132V tolerance), 50/60 Hz, 168 watts.

j. Compatible equipment: RS-232-C and 8-bit parallel devices.

k. Software available: Most programming languages are available. IBM-PC programs are transportable to the PC 6300. (See Part VI-6 of Available Data Collection and Reduction Software, Report 3.)

l. Environmental conditions:

Operating Temperature:	10 to 40 °C
Operating Humidity:	10 to 95%
Altitude:	10,000 ft

m. Application information: The PC 6300 is designed primarily for the corporate environment and features a host of communications capability, including control of data acquisition hardware.

n. Comments: AT&T Information Systems warrants the PC 6300 for a period of 90 days. AT&T technicians are available for customer support through both national (800-922-0354) and regional training centers. Sales are conducted through retail sales outlets.

IV-2-4. **Type and description: Computer, personal.** The COMPAQ PORTABLE 286^{R} and COMPAQ DESKPRO 286^{R} personal computers are Intel 80286 16-bit microprocessor-based systems that run at 6 or 8 MHz (8 MHz is primary), 30% faster than the IBM PC AT^{tm}. Four models are available, two portable and two desktop versions, with the storage capacity, portability and monitor screen being the major differences. All four are software and I/O expansion compatible with the IBM PC AT.

a. Model:
- Compaq Portable 286 Model 1: includes 256 kbytes RAM and 3 expansion slots
- Compaq Portable 286 Model 2: includes 640 kbytes RAM and 2 expansion slots
- Compaq Deskpro 286 Model 1: includes 256 kbytes RAM and 5 expansion slots
- Compaq Deskpro 286 Model 2: includes 512 kbytes RAM and 4 expansion slots

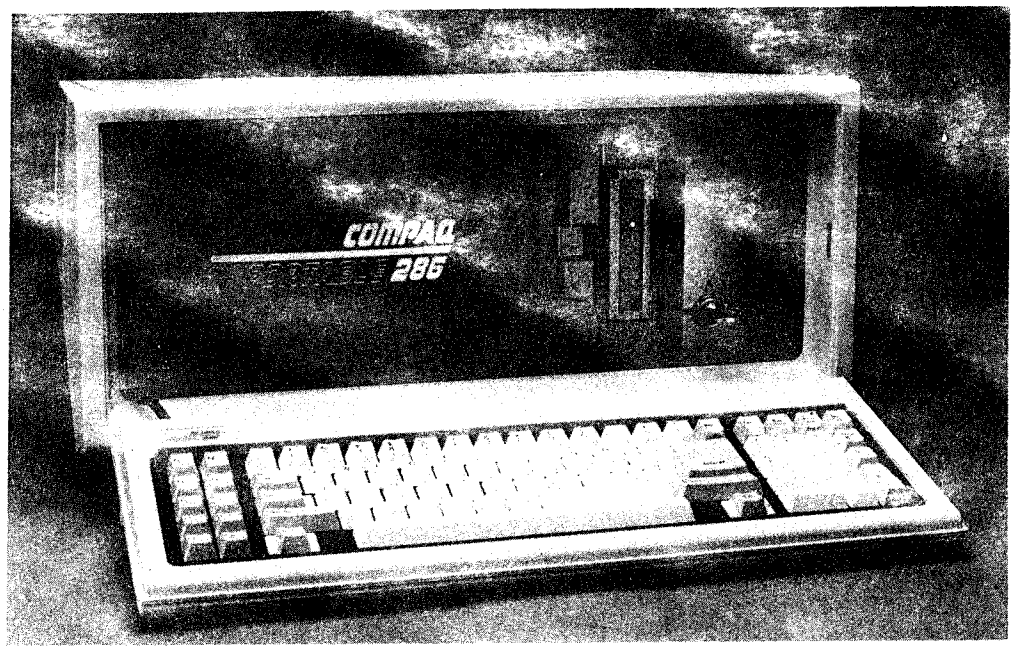

COMPAQ PORTABLE 286 (PHOTO COURTESY OF COMPAQ COMPUTER CORP.)

COMPAQ DESKPRO (PHOTO COURTESY OF COMPAQ COMPUTER CORP.)

Both Portable 286 and Deskpro 286 models house 1.2-Mbyte diskettes, real-time clock, EIA RS-232-C port, parallel printer port, RGB color monitor port, composite video monitor port, and an RF modulator. Both portable units integrate a 9-in. monochrome monitor.

b. Manufacturer: Compaq Computer Corporation
20555 FM149
Houston, TX 77070
(Phone) (713) 370-0670

c. Pricing: $4,500.00 - $6,250.00

d. Operation: Operations and programming is accomplished through an 84-key typewriter-style keyboard. A built-in security feature prevents unauthorized keyboard access in operating and nonoperating modes.

e. Prerequisites: Operating system. A CRT monitor is required for the Deskpro 286.

f. Input specifications: Determined by interfaces selected.

g. Output specifications: Same as input specifications.

h. Interfacing: All portable and desktop units are equipped with identical I/O capability. Available ports include a Centronics-type parallel printer port and RS-232-C. Interfaces and adapters for the IBM-PC/XT/AT are compatible with the Compaq models.

i. Power requirements and recommendations: 120 VAC, 60 Hz, 150 watts.

j. Compatible equipment: Any peripherals and systems used with the IBM PC XT/AT may be used with the Compaq 286.

k. Software available: A huge inventory of software which is available for the IBM personal computers may be used with the Compaq. (See Part VI-6 of Available Data Collection and Reduction Software, Report 3.)

l. Environmental conditions: Operating temperature: 10 to 40 °C. Relative humidity: 20 to 80%.

m. Application information: Data acquisition, communication data reduction.

n. Comments: Sales and service available in retail computer outlets. All units include a 90-day warranty on parts and labor.

IV-2-5. Type and description: **Microcomputer.** The MicroVAX microcomputer is a 32-bit processor that includes virtual memory addressing, an extensive instruction set, 16- or 32-bit general purpose internal registers and a versatile interrupt priority scheme of 32 levels. It is software-compatible with the larger VAX minicomputer system; any nonprivileged native mode program that runs on a VAX/VMS system executes unmodified on a MicroVAX system. Standard features of the MicroVAX include: 8-slot Q-bus backplane, block mode transfer support, 10-msec interval timer, a 28-Mbyte fixed disk, and 800-kbyte subsystem. The MicroVAX is available in three configurations, rack-mounted, floorstand, and tabletop.

a. Model: MicroVAX I and MicroVAX II

b. Manufacturer: Digital Equipment Corporation
146 Main Street
Maynard, MA 01754
(Phone) (800) 343-4040

c. Pricing: $16,000.00 to $40,000.00 depending upon model.

d. Operation: The system control switches and indicator lights are located on the control panel at the front of the system unit chassis. These controls permit the operator to apply and remove AC power, to stop and start the current program operation, and to protect the data stored on the fixed disk drive. Other operator inputs are through the console terminal. A rear I/O distribution panel provides plug-in connectors for terminals, network interfaces, and other cables.

e. Prerequisites: VAX/VMS, MicroVMS or MicroVAX ULTRiX-32 (UNIX) operating systems, and an EIA RS-232-C-compatible video or hardcopy terminal.

f. Input specifications: Serial data (RS-232-C), IEEE-488 GPIB, 8- and 16-bit TTL parallel words and analog voltages may be input and/or output with the appropriate optional interfaces.

g. Output specifications: Same as input specifications.

h. Interfacing: Not applicable.

i. Power requirements and recommendations: 120 VAC (88-128-VAC tolerance), 60 Hz, single phase, 345 watts.

j. Compatible equipment: Any Q-bus-compatible controllers that are available from several manufacturers.

k. Software available: Because the MicroVMS software supports the operation of the Q22 bus in the MicroVAX I system, many device interfaces are available from DEC and from other manufacturers. These interfaces enable the effective communication between systems and devices that support the data acquisition and control. (See Part VI-10 of Available Data Collection and Reduction Software, Report 3 for a listing of available software.)

l. Environmental conditions: The MicroVAX I can operate in any office environment; no special air-conditioning is required. Following are the operating environmental requirements:

Temperature:	15-32 °C
Humidity:	20-80% (noncondensing)
Max. altitude:	8000 ft

m. Application information: The MicroVAX I is compatible with a variety of existing Q-bus interfaces and memories already supplied by DEC and other vendors (i.e. MDB Systems, para. IV-3-5). All interfaces and controllers designed for the LSI-11 and PDP-11/23 microcomputers may be used with the MicroVAX. Many vendors that specialize in data acquisition systems offer a compatible Q-bus interface.

n. Comments: DEC provides maintenance training and consulting services from more than 400 locations worldwide. Their service contracts provide committed four-hour service response if the system is within 100 miles of a DEC service location.

IV-2-6. **Type and description: Microcomputer.** The PDP-11/23-PLUS is a 16-bit microcomputer that delivers minicomputer performance by providing memory size and powerful software usually found on larger systems. Its small size, fast response time, and large memory make it a good choice for real-time applications, such as process control or data acquisition. It includes the standard Q-bus system features, runs on the common PDP-11 instruction set, 256 kbytes or 512 kbytes of parity (metal-oxide semiconductor) MOS memory, and two 10.4-Mbyte removable cartridge disk drives. Memory is expandable to 4 Mbytes.

a. Model: PDP-11/23-PLUS (order code: 11T23-BK(BL))

b. Manufacturer: Digital Equipment Corporation
146 Main Street
Maynard, MA 01754
(Phone) (800) 343-4040

c. Pricing: $13,000.00

d. Operation: The standard instruction set of 91 instructions includes operand instructions that operate with bit, byte, 16-bit word, and multiple word data types. Hardware integer multiply and divide and direct implementation of multiple shifting are standard for the CPU. Memory management is a standard feature on the PDP-11/23 PLUS. It provides relocation, segmentation and protection, and enables the 16-bit processor to address up to 4 Mbytes. A system distribution panel is incorporated to provide a quick and effective means of connecting terminals and external devices to this system. As interfaces are added to the system, the distribution panel accommodates additional connectors.

e. Prerequisites: RT-11, RSX-11M, RSX-11S, or RSX-11M-PLUS operating systems, and an EIA RS-232-C-compatible video or hardcopy terminal.

f. Input specifications: Serial data (EIA RS-232-C), IEEE-488, 8- and 16-bit parallel words, and analog voltages with the appropriate optional interfaces which are readily available.

g. Output specifications: Same as input specifications.

h. Interfacing: Q-bus-compatible interfaces and controllers. Six Q-bus slots are available for I/O interfaces and/or memory expansion.

i. Power requirements and recommendations: 120 VAC/60 Hz, 840 W.

j. Compatible equipment: Any Q-bus-compatible controllers which are available from several vendors. The system provides two EIA RS-232-C I/O ports (including the operator console) which accept EIA RS-232-C hardware devices.

k. Software available: BASIC, COBOL, FORTRAN, ASSEMBLY, Pascal, DATATRIEVE, and many others. (See Part VI-1 of Available Data Collection and Reduction Software, Report 3.)

l. Environmental conditions: The area environment has a substantial effect on the overall system reliability. The recommended environmental conditions follow:

Temperature:	21 ^{o}C, $\pm$3 ^{o}C
Rel. humidity:	50%, $\pm$10% (noncondensing)
Humidity (rate of change):	6% / hr

m. Application information: Highly useful for data acquisition and data reduction because of the wide variety of hardware units and software programs available from many sources. The system requires a controlled environment for reliable operation.

n. Comments: DEC provides maintenance training and consulting services from more than 400 locations worldwide. DEC service contracts provide committed four-hour service response if the system is within 100 miles of a DEC service location.

IV-2-7. Type and description: **Minicomputer, 32-bit.** The CONCEPT 32 is a family of real-time, 32-bit minicomputer systems targeted for scientific, technical, and industrial applications. Four product lines are offered by Gould (32/27, 32/67, 32/87, and 32/97). All interfaces, controllers, peripherals and software are upward compatible to assure future growth in user application capacity. Only the low end 32/27 is described because it has sufficient power and storage to serve as a host computer for data acquisition at a concrete dam. The CONCEPT 32/2705 computers consist of an 18-slot logic/memory chassis and separate 8-slot I/O expansion chassis mounted in a single-bay, white cabinet with black trim. Inherent memory capacity is 8 Mbytes. This is an operator's console CRT. Three of the logic/memory slots contain the CPU, IOP, and 1 Mbyte of memory. The remaining 15 slots are available for additional memory and options.

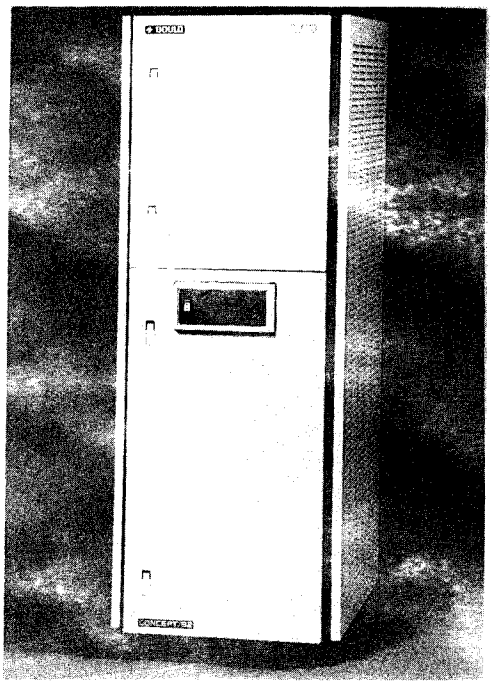

CONCEPT 32 MINICOMPUTER (PHOTO COURTESY OF GOULD, INC.)

a. Model: CONCEPT 32/2705

b. Manufacturer: Gould, Inc., Computer Systems Div.
6901 W. Sunrise Blvd.
Ft. Lauderdale, FL 33313
(Phone) (305) 587-2900

c. Pricing: Base price is $55,000.00 with a GSA discount of 19 to 23% depending on delivery items.

d. Operation: The CPU uses instruction look-ahead for fast execution of instructions. A set of eight high-speed, general purpose registers is available to the programmer to use in arithmetic, logical, and shift operations. The mapped program executive (MPX-32) is a disk-based operating system that supports concurrent execution of multiple tasks in real-time, interactive, and batch environments. The UTX/32 time-sharing executive is derived from AT&T Bell Laboratories UNIX operating system. The MPX-32 OS is more oriented toward real-time data acquisition and control than the UTX/32.

e. Prerequisites: MPX-32 or UTX operating system and a system load device with appropriate diagnostic media, i.e., magnetic tape, floppy disk, or 9 in. disk drives.

f. Input specifications: Gould manufactures optional controllers that provide EIA RS-232-C, RS-449/423, current loop and IEEE-488 signals.

g. Output specifications: Same as input.

h. Interfacing: Controllers and interfaces must be purchased to be compatible with the internal I/O bus of the system.

i. Power requirements and recommendations: 120/208 VAC, 60 Hz, 50 amp. Hardwired to power distribution unit.

j. Compatible equipment: RS-232-C or IEEE-488 devices providing the Gould 8512-2, eight-line asynchronous and 8024, IEEE-488 Bus controllers are available.

k. Software available: MPX-32 operating system, FORTRAN 77, and PACE/32 data acquisition. (Refer to Available Data Collection and Reduction Software, Report 3., para. V-1-32.)

l. Environmental conditions: Operating temperature: 10 to 40 °C. Relative humidity: 20 to 80%. Altitude: 7,000 ft.

m. Application information: Useful as a host computer to collect and analyze data from several remote data acquisition systems via RS-232-C serial data links.

n. Comments: Gould, Inc. Computer Systems Division (formerly Systems Engineering Laboratory - SEL) has demonstrated long term support in excess of 15 years. Availability of applications software to meet Corps of Engineers' dam monitoring requirements is limited.

IV-2-8. **Type and description: Super-Minicomputer.** The H700 five-user configuration consists of 1.5 Mbytes of main memory, model 5634 dual-port 80-Mbyte removable disk, model 5131 160-Mbyte fixed disk add-on, five model 8675 CRTs, three model 4326 printers, and a scientific arithmetic unit. This system offers full multiterminal support for the five terminals and can support up to 128 terminals with fully expanded memory. This

system is well suited for office, data manipulation, and scientific/engineering applications.

a. Model: H700

b. Manufacturer: Harris Corporation
Computer Systems Division
2101 Cypress Creek Road
Ft. Lauderdale, FL 33309
(Phone) (305) 974-1700

H700 SUPER-MINICOMPUTER (PHOTO COURTESY OF HARRIS CORP.)

c. Pricing: Five-user configuration $160,810.00

d. Operation: The H700 uses the Harris virtual-memory operating system (VOS), which is a multiprogramming operating system that concurrently supports: mainstream batch processing, interactive time-sharing, database management, remote job entry, real-time operations, and transaction processing. The CPU features a 48-bit architecture, several general and special purpose registers, an arithmetic section, timing and control logic, memory interface logic, and I/O interface circuits.

Two additional processors operate independently, asynchronously, and in parallel with each other. These are the instruction processor (IP) and the execution

processor (EP). The IP fetches, maintains, and feeds instructions and operands to the execution unit (EU), as well as transfers the results from the EU to the main memory. The EP processes all instructions and has an integral 64-bit-wide hardware floating-point processor that performs 32-, 48-, 64-, and 96-bit floating-point operations.

The arithmetic section consists mainly of a 48-bit scientific arithmetic unit (SAU) and buses to permit data manipulation between various registers and the SAU. Arithmetic functions performed include addition, subtraction, multiplication, division, and square root computation. The SAU is optional on the H700.

e. Prerequisites: The five-user configuration is a typical system and lists all the equipment needed for most applications.

f. Input specifications: Serial data via RS-232-C and parallel data via IEEE-488 interfaces with appropriate optional hardware.

g. Output specifications: Serial data via RS-232-C and parallel data via IEEE-488 interfaces with appropriate optional hardware.

h. Interfacing: RS-232-C and IEEE-488.

i. Power requirements and recommendations: 120/208 VAC, three-wire at 60 Hz or 120/240 VAC, four-wire at 50 Hz. Maximum current draw is 50 A at 208 VAC.

j. Compatible equipment: RS-232-C and IEEE-488 compatible equipment, as well as various Harris terminals, printers, card readers, etc.

k. Software available: Ada, APL, Assembler, Basic, C, COBOL, Forgo, FORTRAN, SNOBOL, and Plot-10 graphics are all supported by the H700 computer. (Refer to Available Data Collection and Reduction Software, Report 3., para. V-3-5.)

l. Environmental conditions:
Temperature: 2 to 113 ^{o}F (operating)
Humidity: 20 to 80% RH

m. Application information: The H700 is well suited for scientific/engineering applications. This system is not intended for use as a data acquisition system.

n. Comments: The H700 is software and peripheral compatible with the H800 and H1000 computers. This provides system growth without excessive reconfiguration.

IV-2-9. **Type and description: Microcomputer, 16-bit.** The HP 1000A series comprises a family of computers that feature distributed intelligence I/O, and an I/O processor on each interface that maximizes I/O efficiency and minimizes CPU involvement with I/O operations. Memory capacity for the A600 and A700 is 128 kbytes to 8 Mbytes and 768 kbytes to 21 Mbytes for the A900. All three models feature a built-in dynamic mapping system, memory protect, and time base generator.

A-SERIES COMPUTER (PHOTO COURTESY OF HEWLETT-PACKARD)

a. Model: HP 1000 A600, A700, and A900

b. Manufacturer: Hewlett-Packard, Personal Computer Group
11000 Wolfe Road
Cupertino, CA 95014
(Phone) (800) 367-4772

c. Pricing: A600 with 128 kbytes memory - $7,950.00
A700 with 128 kbytes memory - $9,820.00
A900 with 768 kbytes memory - $23,900.00

d. Operation: The HP 1000A-series is managed by the real-time executive (RTE) operating system which supports multiprogramming, high-speed program languages, virtual memory and sharable extended memory areas for data, distributed systems networking, graphics software and database management. Instructions and program compatibility between all members of the HP 1000 family give users access to a broad base of proven software.

e. Prerequisites: An operator terminal, one or more hard disks, and other peripheral devices as needed for users' applications.

f. Input specifications: 16-bit parallel transfers (TTL), IEEE-488 bus, and EIA RS-232-C.

g. Output specifications: Same as input specifications.

h. Interfacing: A full line of Hewlett-Packard-manufactured interfaces and peripheral devices support a wide variety of application requirements.

i. Power requirements and recommendations: 115 VAC and/or 230 VAC, ±20%, 47.5 to 66 Hz. Maximum operating current: 16A / phase.

j. Compatible equipment: IEEE-488 bus and RS-232-C devices.

k. Software available: FORTRAN 77, Pascal, BASIC, Assembler, Graphics, Communications, and Process monitoring/control software. (See Part VI-12 of the Software report for data acquisition and analysis packages.)

l. Environmental conditions: Operating temperature: 10 to 40 °C. Relative Humidity: 20 to 80%. Altitude: 15,000 ft.

m. Application information: Monitoring and control of real-time processes, data acquisition (both low and high point count), computer networking, database management, interactive graphics, and other

applications. Plug-in analog interfaces are available for low point-count data acquisition. For high point- count data acquisition, a data acquisition unit may be connected to the HP 1000 via the IEEE-488 bus or EIA RS-232-C.

n. Comments: Hewlett-Packard offers a range of maintenance services, applications engineering, and training.

IV-2-10. Type and description: **Microcomputer, 16-bit.** The Hewlett-Packard PORTABLE computer is a battery-operated personal computer using the 16-bit CMOS 8086 microprocessor. The PORTABLE has up to 272 kbytes of RAM plus 384 kbytes of ROM where all the internal software and the operating system are stored. It has an LCD 16-line/80-column display, a full typewriter style keyboard, and a built-in modem.

a. Model: PORTABLE (HP 45670A)

b. Manufacturer: Hewlett-Packard, Portable Computer Div.
1000 N.E. Circle Blvd.
Corvallis, OR 97330
(Phone) (800) 367-4772

c. Pricing: $2,995.00.

d. Operation: It comes with MS-DOS 2.11 operating system, Lotus 1-2-3, and terminal emulation software.

e. Prerequisites: None.

f. Input specifications: EIA RS-232-C, HP-IL, and 300-baud modem that plugs into an ordinary phone jack.

g. Output specifications: Same as input.

h. Interfacing: EIA RS-232-C and HP-IL compatible devices.

i. Power requirements and recommendations: Lead/acid batteries that are rechargeable through a standard AC outlet.

j. Compatible equipment: EIA RS-232-C and HP-IB devices.

k. Software available: GW BASIC, COBOL, Pascal, and MS-DOS. (See Part VI-4 of the Software report.)

l. Environmental conditions: Operating temperature: 0 to 45 deg C.

m. Application information: Portable data acquisition and transmission of data to a host computer via the built-in modem.

n. Comments: The PORTABLE may be easily linked to an IBM-PC via an EIA RS-232-C port.

IV-2-11. Type and description: **Calculator, HP 41.** The HP 41CX and HP 41CV calculators provide the heart of expanding computational, data acquisition, or instrument control systems. The HP 41CV has 2,237 bytes of main memory, and the HP 41CX has 3,105 bytes of main and extended memory. Each of them may be expanded to a maximum of 6,437 bytes or 919 data registers by adding extended memory modules. In addition to all the built-in functions of the HP 41CV, the HP 41CX features built-in time and extended functions/memory modules, a text-file editing function, and 10 other functions not available in the HP 41CV.

a. Model: HP 41CX and HP 41CV

b. Manufacturer: Hewlett-Packard, Portable Computer Div.
1000 N.E. Circle Blvd.
Corvallis, OR 97330
(Phone) (800) 367-4772

c. Pricing: HP 41CV - $225.00.
HP 41CX - $325.00.

d. Operation: Over 200 separate operations (over 128 in the HP 41CV) reside in the HP 41CX function catalog with 58 of these right on the keyboard. Functions and programs may be assigned to almost any key. The HP 41 comes with keyboard overlays and a set of user labels to help facilitate customization.

e. Prerequisites: The HP 82160A HP-IL interface module ($125.00) is required to connect the HP 41 to other instruments and computers.

f. Input specifications: Not applicable.

g. Output specifications: Not applicable.

h. Interfacing: A variety of dedicated plug-in peripherals is available from Hewlett-Packard to expand the capability of the HP 41.

i. Power requirements and recommendations: Battery powered.

j. Compatible equipment: An array of peripherals and interfaces are available from Hewlett-Packard.

k. Software available: HP-written application pacs and solution books, a user's library program and customized software are available from Hewlett-Packard. Data acquisition pac ($100.00) provides data acquisition using the HP 3421A data acquisition and control unit. (Refer to the Software report, para. V-1-9.)

l. Environmental conditions: Operating temperature: 0 to 45 °C. Humidity: 0 to 95% RH.

m. Application information: Portable data acquisition and electronic notebook to replace manual reading of dam instruments and use of a clipboard.

n. Comments: Combine the HP 41CV, the HP 3421A data acquisition and control unit, the HP 82161A digital tape drive, and the HP 82162A printer/plotter for a portable data logger. The HP 44468A data acquisition pac provides software support for these devices.

IV-2-12. **Type and description: Computer, hand-held.** The HP 71B is a 12-ounce portable computer whose 64-kbyte operating system supports BASIC, CALC, FORTH, and ASSEMBLER languages. It has 17.5 kbytes of user memory and four RAM/ROM ports which provide a maximum of 320 kbytes or 33.5 kbytes of RAM as add-on memory.

a. Model: HP-71B

b. Manufacturer: Hewlett-Packard, Portable Computer Div.
1000 N.E. Circle Blvd.
Corvallis, OR 97330
(Phone) (800) 367-4772

c. Pricing: $525.00. An optional EIA RS-232-C interface (HP 82164A) is $295.00.

HP 71B COMPUTER (PHOTO COURTESY OF HEWLETT-PACKARD)

d. Operation: Over 240 instructions complement the HP 71 built-in BASIC. CALC mode, combined with a 10-digit key pad, permits quick solutions and input of numeric data. Input/output communications with data acquisition instruments are available through the HP-IL port.

e. Prerequisites: The HP 71B may be used as a programmable calculator without any accessories. However, an interface is required for I/O operation with a peripheral or data acquisition system. Several compatible interfaces are available from HP as options.

f. Input specifications: Hewlett-Packard interface loop (HP-IL) signals. This is a bit-serial interface that provides data transfer rates of up to 5,000 bytes per second.

g. Output specifications: Same as input.

h. Interfacing: A broad array of Hewlett-Packard accessories, peripherals, instruments, and other computers may be connected through the HP-IL. Also, an HP-IL to EIA RS-232-C converter (HP 82164A - $295.00) or an HP-IL to IEEE-488 bus converter (HP 82166A - $395.00) may be used to interface the HP71B to any RS-232-C or IEEE-488 bus-compatible device.

i. Power requirements and recommendations: Battery powered.

j. Compatible equipment: HP 82161A digital cassette drive, HP 82162A thermal printer/plotter, HP 82168A acoustic coupler (modem), and other accessories.

k. Software available: Data acquisition pac (HP) in firmware only. (Refer to Available Data Collection and Reduction Software, Report 3., para. V-4-7.)

l. Environmental conditions: Operating temperature: 0 to 45 °C. Humidity: 0 to 95% RH.

m. Application information: Portable data acquisition or data entry. The HP 71B/HP 3421A combination is a low-cost data acquisition system for measuring temperature, pressure, level, strain, and flow.

n. Comments: The HP 75D is a larger, more powerful computer than the HP 71B.

IV-2-13. **Type and description: Computer, Hand-held.** The HP 75D is a 26-ounce portable computer that has an 8-bit CMOS series 80 personal computer CPU with built-in HP-IL and digital bar code wand interfaces. The built-in 48-kbyte ROM BASIC operating system has 167 system commands, including 41 numeric functions. It offers a maximum of 24 kbytes of RAM with 16 kbytes built-in and an optional 8-kbyte memory module.

a. Model: HP 75D

b. Manufacturer: Hewlett-Packard, Portable Computer Div.
1000 N.E. Circle Blvd.
Corvallis, OR 97330
(Phone) (800) 367-4772

c. Pricing: $1095.00

d. Operation: The HP 75D may be programmed in BASIC language, or a built-in card reader allows the use of small magnetic cards for storage of programs up to a capacity of 1.3 kbytes per card. Data collected with the HP 75D may be processed at remote sites or transferred to another computer through a modem. Data may also be uploaded to a larger system through the HP-IL.

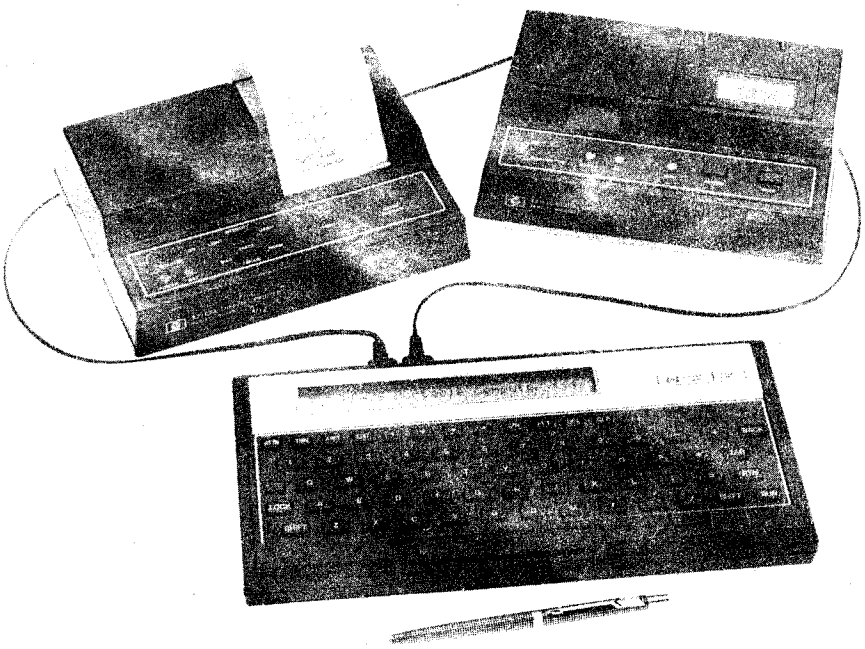

HP 75D COMPUTER (PHOTO COURTESY OF HEWLETT-PACKARD)

e. Prerequisites: An optional interface and I/O ROM (HP 00075-15001) is required for EIA RS-232-C or IEEE-488 communications.

f. Input specifications: Hewlett-Packard Interface Loop (HP-IL) serial communications and any of the standard bar codes.

g. Output specifications: HP-IL signal levels.

h. Interfacing: A broad array of HP accessories, peripherals, instruments, and other HP computers may be connected through the HP-IL. Also EIA RS-232-C- or IEEE-488-compatible devices may be connected with interfaces offered by Hewlett-Packard.

i. Power requirements and recommendations: NiCad battery pack (HP82001B).

j. Compatible equipment: HP 82161A digital cassette recorder, HP 82162A thermal printer/plotter, HP 82168A acoustic coupler (modem), and other accessories and instruments.

k. Software available: Data acquisition pac (HP) in firmware only. (Refer to Available Data Collection and Reduction Software, Report 3., para. V-4-7.)

l. Environmental conditions: Operating temperature: 0 to 45 °C. Humidity: 0 to 95% RH.

m. Application information: Portable data acquisition and data entry.

n. Comments: The HP 71B is a lighter, less expensive hand-held computer, but does not have built-in HP-IB interface and contains less memory.

IV-2-14. **Type and description: Personal computer, Touchscreen.** The Hewlett-Packard Touchscreen II and Touchscreen MAX II personal computers are 8088 microprocessor-based with 256 kbytes RAM and built-in graphics terminal capability. The Touchscreen II comes with a dual, double-side disk drive, and the MAX II with either a 10-, 20- or 40-Mbyte Winchester drive. Both come with two accessory slots which permit up to 640 kbytes of RAM additional memory or an internal modem and two EIA RS-232-C ports and one IEEE-488 port.

a. Model: HP 150 (HP 4565B)

b. Manufacturer: Hewlett-Packard, Personal Computer Group
11000 Wolfe Rd.
Cupertino, CA 95014
(Phone) (800) 367-4772

c. Pricing: Touchscreen II - $3,495.00
Touchscreen MAX II - $5,495.00

d. Operation: Uses MS-DOS 2.11 operating system. Provides Tektronix 4014 emulation graphics. The

Touchscreen input is accomplished with a series of light emitting diodes (LEDs) which are hidden along the vertical and horizontal sides of the screen creating a matrix of light beams (14 X 21 LEDs). The HP Touchscreen may be turned off and on with a keystroke.

e. Prerequisites: MS-DOS operating system.

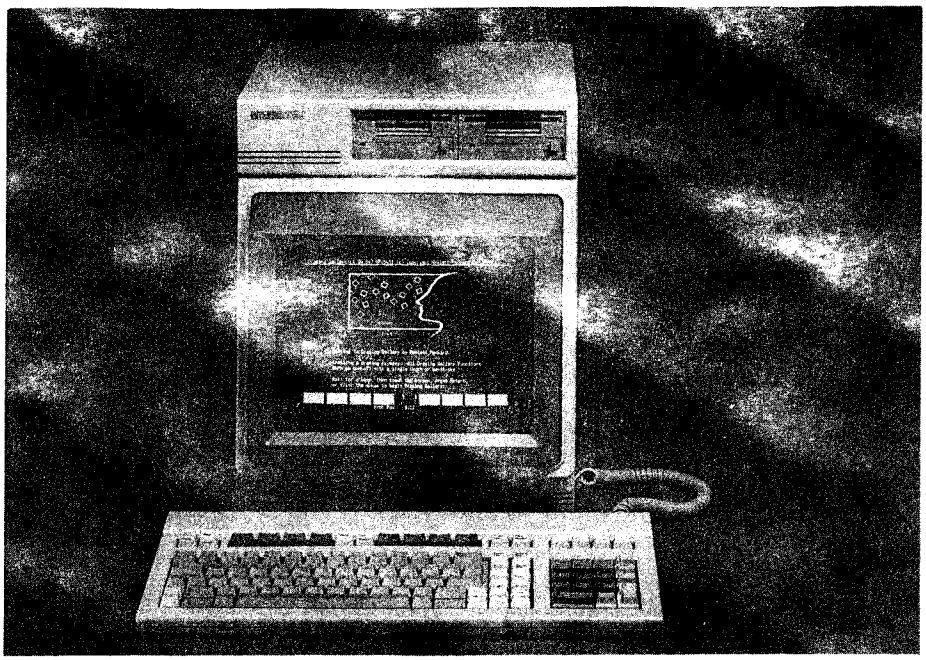

HP 150 TOUCHSCREEN (PHOTO COURTESY OF HEWLETT-PACKARD)

f. Input specifications: EIA RS-232-C, RS-422, and IEEE-488 bus.

g. Output specifications: Same as input.

h. Interfacing: EIA RS-232-C, RS-422, and IEEE-488 and Ether series.

i. Power requirements and recommendations: 115 VAC, 60 Hz. FCC RFI level B approved.

j. Compatible equipment: Not applicable.

k. Software available: See Part VI-4 of Available Data Collection and Reduction Software, Report 3.

l. Environmental conditions: Operating temperature: 5 to 40 °C. Humidity: 5 to 90% RH.

m. Application information: Data acquisition, networking, manufacturing, computer-aided engineering, and administrative.

n. Comments: The HP 150 personal computer is comparable to the IBM PC. Both use the INTEL 8088 microprocessor. Software is not interchangeable.

IV-2-15. **Type and description: Computer, Personal, HP 9000.** The HP 9000 series 200 is Hewlett-Packard's line of technical workstations, based on the Motorola MC68000 microprocessor with 16-/32-bit architecture. The series 200 includes the 216 (low end), 217, 220, 226, 236, and 237 (high end). The midrange 226 is best suited for data acquisition applications and is described herein. The model 226A features a 7-in. monochrome CRT with 400 X 300 graphics, 128-kbyte internal RAM, integrated 5-1/4-in. flexible disk drive, integrated keyboard, and IEEE-488 interface. It has an eight-slot back plane and can support up to 2.05 Mbytes of internal RAM.

a. Model: HP 9000 model 226A (order no. HP 9826A)

b. Manufacturer: Hewlett-Packard, Personal Computer Group
11000 Wolfe Road
Cupertino, CA 95014
(Phone) (800) 367-4772

c. Pricing: $9,080.00

d. Operation: The operating system is included in system configuration with languages. The HPUX single-user or multiuser operating system is available. The computer features five user-definable soft keys, a special rotary control knob for program editing, and a 100-key keyboard.

e. Prerequisites: None.

f. Input specifications: IEEE-488 bus. TTL 16-bit parallel and RS-232-C are optional.

g. Output specifications: Same as input.

h. Interfacing: Optional interfaces are available from Hewlett-Packard for 16-bit parallel BCD I/O, HP-IB, serial communications, and data communications.

i. Power requirements and recommendations: 120 VAC ±10%, 50/60Hz.

j. Compatible equipment: Not available.

k. Software available: Numerous software packages are available from HP including programs for CAD, mechanical engineering, mathematics, and statistics. (Refer to the Software report, paras. V-1-8 and V-2-1.)

l. Environmental conditions: Operating temperature: 10 to 30 °C recommended, 10 to 40 °C maximum. Operating humidity: 40 to 60% RH recommended, 20 to 80% RH maximum.

m. Application information: The series 200 computers are ideal for scientific and engineering applications requiring both high-speed and data handling capability. Data acquisition and control is managed via the IEEE-488 instrument bus.

n. Comments: Over 300 applications software packages are available from HP and from third parties via the HP PLUS program. Hewlett-Packard offers on-site product maintenance within one-day if the site is located within 100 miles of an HP support office. For locations beyond 100 miles, on-site service is available with an increase in response time.

IV-2-16. Type and description: **Microcomputer, IBM PC AT.** The IBM PC AT is an Intel 80286 16-bit microprocessor-based personal computer. It may be a single-user system or it may be shared by up to three users. Main memory is 512 kbytes expandable to 3 Mbytes. The model 68 has one 1.2-Mbyte dual-sided diskette drive; the model 99 has a 1.2-Mbyte dual-sided diskette drive and one 20-Mbyte hard disk. The 6-MHz 80286 processor features a 16-bit data path and a 24-bit address mode. The basic unit includes eight I/O expansion slots for additional devices, features, or memory. Six of the slots support either the 8-bit or 16-bit option cards; two support 8-bit cards only.

The model 99 is equipped with a serial/parallel adapter which provides one serial port (EIA RS-232-C) and one parallel port.

a. Model: IBM PC AT

b. Manufacturer: IBM Personal Computer, Sales and Service
P.O. Box 1328-W
Boca Raton, FL 33432
(Phone) (800) 243-7054

c. Pricing: IBM PC AT Model 68 - $3,995.00
IBM PC AT Model 99 - $5,795.00 (with 20 Mbyte hard disk)

IBM PC AT (PHOTO COURTESY OF IBM CORP.)

d. Operation: The PC AT supports two operating systems, an enhanced version of PC-DOS, and Microsoft Xenix. The PC AT operates at a performance rate that is two to three times faster than that of previously announced IBM PCs.

e. Prerequisites: Video display monitor and device for display output; operating system.

f. Input specifications: EIA RS-232-C and 8-bit parallel.

g. Output specifications: Same as input specifications

h. Interfacing: A wide range of compatible interfaces are available from IBM and third party vendors. Eight bit interfaces and adapters used with the IBM PC and IBM PC XT are compatible with the AT.

i. Power requirements and recommendations: 115 VAC (±10%) 5A.

j. Compatible equipment: Numerous interfaces are available to communicate with peripherals and systems.

k. Software available: IBM PC DOS 3.0 and 3.1; IBM PC Xenix and hundreds of programs from third party sources. (See Part VI-6 of Available Data Collection and Reduction Software, Report 3.)

l. Environmental conditions:

Operating Temperatures:	15.6 to 32.2 °C
Operating Humidity:	8 to 80% RH
Altitude:	7000 ft

m. Application information: Ideally suited for data acquisition and data reduction. A wide selection of compatible hardware and software to accommodate data acquisition and analysis is available on the commercial market for the IBM PC and IBM AT. (Refer to paras. IV-14-1, IV-14-7, IV-14-8, and IV-14-9 herein.)

n. Comments: Most software programs written for the IBM PC and IBM PC XT are transportable to the IBM PC AT. There are some slight differences between the instruction set of the 8088 processor used in the IBM PC and the 80286 used in the IBM PC AT. Maintenance - on-site; pickup/delivery - carry-in and mail-in. For most applications, the addition of a second floppy disk is recommended. Standard warranty for the PC AT is 12 months.

IV-2-17. Type and description: Microcomputer, IBM PC. The IBM PC is an Intel 8088 16-bit (8-bit data path) microprocessor-based personal computer that comes standard with 256 kbytes of memory and a single 360-kbyte disk drive. All adapters for peripherals and expansion must be purchased as options. Only one workstation is supported (IBM PC AT supports 3). Memory is expandable to 640 kbytes. Five slots are available for expansion.

a. Model: IBM PC

b. Manufacturer: IBM Personal Computer, Sales and Service
P.O. Box 1328-W
Boca Raton, FL 33432
(Phone) (800) 243-7054

c. Pricing: $1,995.00 - $2,295.00

d. Operation: IBM PC supports PC DOS, PC/U-86 and PC/IX operating systems. An 83-key keyboard is used to operate and program the computer. A fixed disk expansion unit is required to run the PC/IX.

e. Prerequisites: Video display monitor and device for display output; operating system.

f. Input specifications: Determined by interface options selected.

g. Output specifications: Determined by interface options selected.

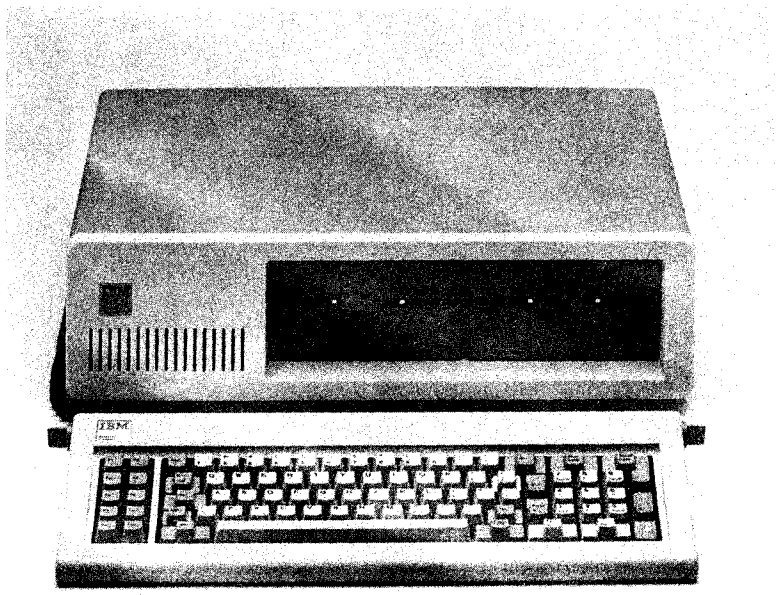

IBM PC (PHOTO COURTESY OF IBM CORP.)

h. Interfacing: A wide range of compatible interfaces and adapters are available from IBM and third-party vendors. The PC accommodates 8-bit interfaces only.

The 16-bit interfaces designed for the IBM PC/AT are incompatible.

i. Power requirements and recommendations: 120 VAC nominal (104 VAC min, 127 VAC max), 60 Hz ±3 Hz, 2.5A.

j. Compatible equipment: EIA RS-232-C, IEEE-488, and 8-bit parallel devices. Requires optional interfaces and controllers.

k. Software available: A huge inventory of third-party software is available for the IBM family. (See Part VI-6 of Available Data Collection and Reduction Software, Report 3.)

l. Environmental conditions: Operating temperature: 16 to 32 °C. Humidity: 8 to 80% RH. Altitude: 7000 fet.

m. Application information: Data acquisition, data reduction, database management, and word processing.

n. Comments: Computers are available through authorized IBM Personal Computer dealers. Maintenance is on-site; pickup/delivery; carry-in; and mail-in. A three-month extended warranty is available. For most applications, the addition of a second floppy disk is recommended.

IV-2-18. Type and description: **Microprocessor, IBM PC/XT.** The IBM PC/XT is an Intel 8088 microcomputer-based system that has a 16-bit internal architecture and an 8-bit internal data bus. Memory capacity is 256 kbytes to 640 kbytes. The advantages of the XT over the PC are eight expansion slots in the XT and five in the PC, and the XT has a 10-Mbyte hard disk. The XT, like the PC, has a 360-kbyte diskette drive. The XT supports one workstation.

a. Model: IBM PC/XT

b. Manufacturer: IBM Personal Computer, Sales and Service
P.O. Box 1328-W
Boca Raton, FL 33432
(Phone) (800) 243-7054

c. Pricing: $1,995.00 to $2,295.00

d. Operation: The XT supports PC-DOS, CP/M-86 and PC/IX

operating systems. The system is operated and programmed through an 83-key typewriter-style keyboard.

e. Prerequisites: Video display monitor and device for display output; operating system.

f. Input specifications: Determined by interface options selected.

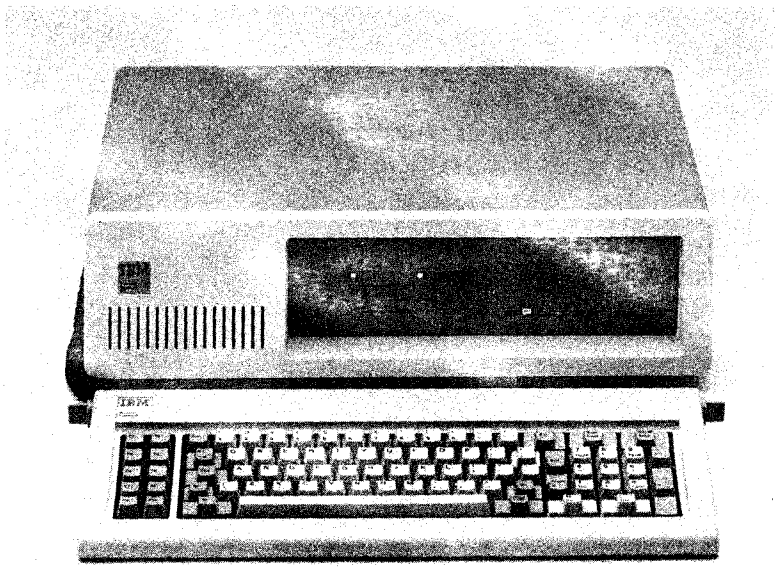

IBM PC XT (PHOTO COURTESY OF IBM CORP.)

g. Output specifications: Determined by interface options selected.

h. Interfacing: A wide range of 8-bit interfaces and adapters are available from IBM and third-party vendors. The 16-bit interfaces designed for the IBM PC-AT do not work in the XT.

i. Power requirements and recommendations: 120 VAC (nominal), 60 Hz, 3A. Voltage range: 104-127 VAC. Frequency range: 57-63 Hz.

j. Compatible equipment: Interfaces and adapters commercially available to communicate with all standard peripherals.

k. Software available: A huge inventory of third-party software is available for the PC family. (See Part VI-

6 of Available Data Collection and Reduction Software, Report 3.)

l. Environmental conditions: Operating temperature: 16 to 32 °C. Humidity: 8 to 80% RH.

m. Application information: Data acquisition, data reduction, database management, word processing, and others.

n. Comments: IBM PC/XTs are available through authorized IBM Personal Computer retail dealers. Maintenance is on-site; pickup/delivery; carry-in; and mail-in. Standard warranty is 90-day limited warranty; same for PC.

IV-2-19. **Type and description: KAYPRO PC microcomputer.** The KAYPRO 16 is an Intel 8088 16-bit microprocessor-based personal computer that comes standard with 256 kbytes of RAM, 360-kbyte floppy disk drive and a 10-Mbyte hard disk. Memory is expandable to 640 kbytes and four expansion slots are available - three are used by the system, leaving only one slot for user options. In comparison to the IBM PC/XT, the KAYPRO 16 includes a printer, software, and monitor in the purchase price which are not included with the XT. The detachable keyboard, color graphics card, and software are compatible with the IBM PC and XT. The KAYPRO 286i model C which has the Intel 80286 microprocessor and 512 Kbytes of RAM is compatible with the IBM PC/AT.

a. Model: KAYPRO 16 and KAYPRO 286i.

b. Manufacturer: KAYPRO Corporation
533 Stevens Ave.
Solana Beach, CA 92075
(Phone) (619) 481-4300

c. Pricing: KAYPRO 16 - $3,295.00
KAYPRO 286i model C - $4,795.00

d. Operation: The KAYPRO 16 uses the MS-DOS general purpose operating system by Microsoft Corp. The

computer is operated through a 62-key keyboard and an integral 9-in. CRT.

e. Prerequisites: None.

f. Input specifications: One RS-232-C asynchronous port and one Centronics type parallel port are included with system.

g. Output specifications: RS-232-C, 8-bit parallel Centronic-type and IBM PC compatible RGB color graphics.

h. Interfacing: Interfaces designed for the IBM PC XT/AT are compatible with the KAYPRO 16/286i.

i. Power requirements and recommendations: 120 VAC, 50/60 Hz, 85 W.

j. Compatible equipment: RS-232-C compatible peripherals/data acquisition units; printers that are 8-bit parallel (Centronics-type), and RGB monitor.

k. Software available: Included with the system are Wordstar, Mailmerge, Mite, Infostar, Calcstar, GW-BASIC, MS-DOS, tutorials and lessons. The KAYPRO 286i is software-compatible with the IBM PC/AT. The KAYPRO 16 can run the IBM PC/XT software. (See Part VI-6 of Available Data Collection and Reduction Software, Report 3.)

l. Environmental conditions: Not available.

m. Application information: The KAYPRO 16 and 286i are primarily used for personal and business applications. The KAYPRO 16 is a portable system and may easily be programmed to communicate with an RS-232-C-compatible data acquisition/data logger for data analysis. The I/O capability of the KAYPRO 16 is limited by only having one user expansion slot. The desktop KAYPRO 286i has seven user expansion slots and most application programs are transportable between the KAYPRO 286i and the IBM PC/AT.

n. Comments: KAYPRO Corporation formerly Non-Linear Systems (NLS), has been a large supplier of digital data measurement systems and instruments for over 30 years. The KAYPRO computers are sold through retail outlets across the nation.

IV-2-20. Type and description: **Minicomputer.** The MODCOMP single board CLASSIC (SBC) minicomputer is a 16-bit system contained on one printed circuit board with a memory daughter board attached. The SBC contains a CPU I/O processor, fixed and floating-point arithmetic capabilities, a console/control panel serial interface, mapping RAMs and either 512 kbytes or 2 Mbytes of solid-state error-correcting MOS memory. It mounts in a 62.5 in. high by 19 in. wide equipment cabinet.

a. Model: CLASSIC II/15

b. Manufacturer: Modular Computer Systems, Inc.
1650 W. McNab Road
Ft. Lauderdale, FL 33310
(Phone) (305) 974-1380

c. Pricing: $8,500.00

d. Operation: The architecture provides flexible, efficient processing for formats ranging from one to 64 bits. A microprocessor-based soft control panel provides operators and maintenance information and control of the CPU through a CRT terminal.

e. Prerequisites: Requires a CRT terminal, disk or tape and required MODCOMP I/O controllers.

f. Input specifications: EIA RS-232-C. Other I/O is determined by the optional controllers selected.

g. Output specifications: Same as input specifications.

h. Interfacing: Requires interfaces and controllers for I/O. MODCOMP offers a good choice of controllers but very few third-party interfaces are available.

i. Power requirements and recommendations: 120 VAC ±10%, 57-63 Hz, 6.95 A or 230 VAC ±10%, 57-63 Hz, 3.63 A.

j. Compatible equipment: MODCOMP controllers and peripherals. EIA RS-232-C and IEEE-488 controllers are available to communicate with data acquisition system.

k. Software available: MAX IV operating system supports FORTRAN 77, ANSI 74, COBOL, Coral 66, and Pascal. An extensive range of available MODCOMP software supports real-time needs.

l. Environmental conditions:
Operating temperature: 0 to 55 °C up to 2000 ft.
Operating Humidity: 10 - 90% RH
Altitude: 10,000 ft
Shock: 3 g for 11 msec with half sine-wave pulse

m. Application information: Measurement and control, communications, scientific, and information processing applications.

n. Comments: The CLASSIC II/15 is the low end of the fully compatible MODCOMP CLASSIC family. MODCOMP manufactures 32-bit mainframes as well as minicomputers. Training and on-site maintenance support is provided.

IV-2-21. Type and description: Minicomputer, 32-bit. The model 3203 system provides full multiterminal support for 16 users and is well suited for office, laboratory and factory environments. The basic system consists of 512 kbytes on-board main memory, eight communications ports, 5-1/4-in. Winchester hard disk and a 60-Mbyte streaming cartridge tape drive for backup. The main memory may be expanded to 4 Mbytes. It is packaged in a desk-high cabinet that is customer installable.

a. Model: 3203 system

b. Manufacturer: Concurrent Computer Corporation
A Perkin-Elmer Company
2 Crescent Place
Oceanport, NJ 07757
(Phone) (800) 631-2154

c. Pricing: $16,600.00

d. Operation: The 3203 system uses Perkin-Elmer's own OS/32 operating system which supports database management, multiterminal timesharing, simplified user interfacing, spooling and data communications. Its instruction set contains 202 instructions including floating-point arithmetic and data handling.

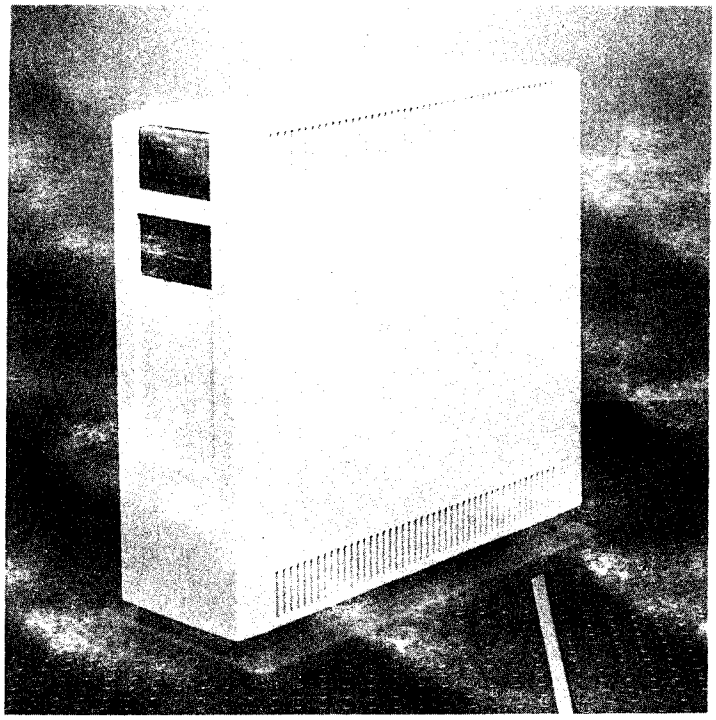

3203 SYSTEM MINICOMPUTER (PHOTO COURTESY OF CONCURRENT COMPUTER)

e. Prerequisites: An EIA RS-232-C terminal is required. Perkin-Elmer 6100 and 6312 desktop, video display units are recommended. Each is self-contained and includes a printer port and modem port.

f. Input specifications: All of the popular data communications interfaces are available, including EIA RS-232-C, IEEE-488, Ethernet, etc.

g. Output specifications: Same as input specifications.

h. Interfacing: Standard system has eight EIA RS-232-C full-duplex ports and one parallel printer port.

i. Power requirements and recommendations: 90 - 132 VAC, 47 - 63 Hz, 12 amps.

j. Compatible equipment: EIA RS-232-C- and IEEE-488-compatible devices.

k. Software available: miniMast, CCSI-PLOT, PLOT-10 (refer to Available Data Collection and Reduction Software, Report 3., paras. V-1-28, V-3-1, V-3-5, respectively), and OS/32 operating system.

l. Environmental conditions: Operating temperature: 15 to 30 °C. Humidity: 20 to 80% RH.

m. Application information: Usable as a host computer to communicate with up to 16 remote data acquisition units through EIA RS-232-C links.

n. Comments: The 3203 is the low-cost entry into Perkin-Elmer's series 3200 super minicomputers. The model 3205 ($28,000.00) is a 19-in. rack mountable, 32-bit system and the model 3210 ($38,000.00) is a larger, more powerful, version than the model 3203. Perkin-Elmer provides nationwide support for these systems.

IV-2-22. **Type and description: Microcomputer.** This is a multiuser super microcomputer system featuring the MC 68000 microprocessor and a variety of hardware and software facilities to serve the needs of the UNIX application systems builder. The compact packaging of the system accommodates the MC 68000 processor with up to 1 Mbyte of memory, and an integral 40-Mbyte Winchester disk, a continuously operational calendar/clock, an optional IEEE-488 interface port and power supply. It is styled for placement on a desk or table.

a. Model: PE7350A

b. Manufacturer: Concurrent Computer Corporation
A Perkin-Elmer Company
2 Crescent Place
Oceanport, NJ 07757
(Phone) (800) 631-2154

c. Pricing: $7,500.00, plus $1,600.00 for a 5-1/4-in. Winchester disk.

d. Operation: The UniPlus operation system provides single-user application for stand-alone operation in a single terminal configuration. It contains Menu Maker user interface that permits the user to create front-end menus to application programs. A multiuser application extension is available for use when communications facilities are employed for up to five user configurations. A graphics library is another extension of the UniPlus operating system that provides

functions such as cursor manipulation, pixel-related functions, plots and graphs, arcs and circles.

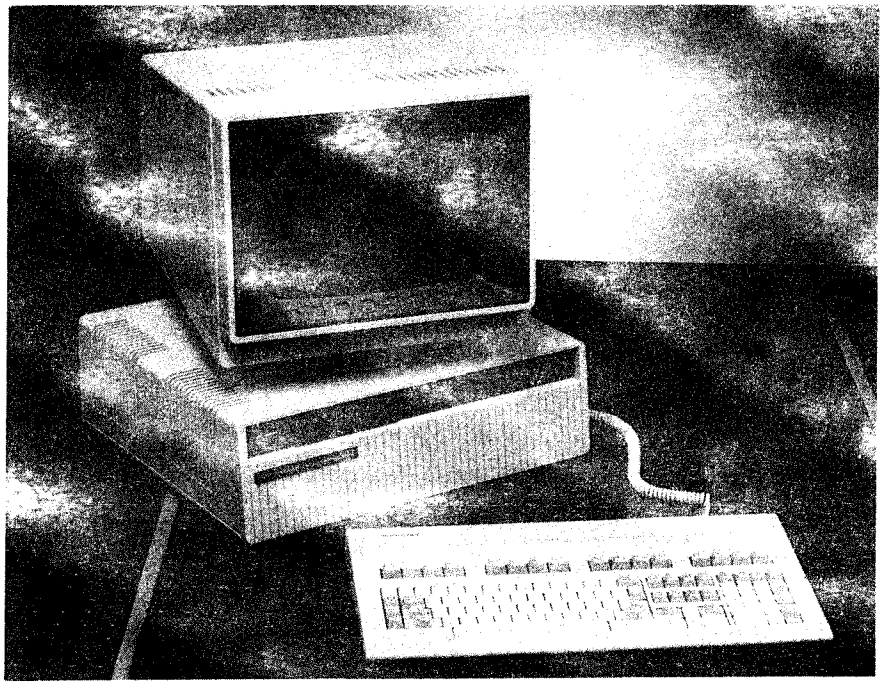

PE7350A MICROCOMPUTER (PHOTO COURTESY OF CONCURRENT COMPUTER)

e. Prerequisites: The PE7350A operates as a stand-alone unit or in combination with most other computer systems.

f. Input specifications: Serial data (EIA RS-232-C) and IEEE-488 parallel bus with appropriate optional interfaces.

g. Output specifications: Same as input specifications.

h. Interfacing: Four EIA RS-232-C ports (software selectable 300 to 9600 baud); optional IEEE-488 bus and optional Ethernet interfaces.

i. Power requirements and recommendations: 115 VAC, 60 Hz.

j. Compatible equipment: EIA RS-232-C and IEEE-488 bus compatible equipment.

k. Software available: FORTRAN 77, BASIC - PLUS, RM/COBOL, SIBOL, and "C" development extension.

l. Environmental conditions: Operating temperature: 15 to 30 °C. Humidity: 20 to 80% RH.

m. Application information: The PE7350A may be used to communicate with data acquisition units and data loggers through the EIA RS-232-C or IEEE-488 bus to manipulate data acquired from transducers for plotting, printing, comparing against a profile, and archive storage.

n. Comments: Perkin-Elmer provides training, maintenance, and customer engineering service throughout the U.S.

IV-2-23. **Type and description: Microcomputer.** The Terra computer is a dual national semiconductor NSC800 8-bit CMOS microprocessor-based portable computer designed specifically for harsh environments. It is battery-powered, weighs 12 pounds, is dust-tight, drip-proof, and may be used indoors or outdoors. It contains a 64-kbyte CMOS static RAM and 128 kbytes, expandable to 512 kbytes of solid-state, nonvolatile magnetic bubble memory. The Terra computer operating system is CP/M-80, version 2.2 and its instruction set is compatible with the Z80, 8080, and 8085 microprocessors. It has a 16-line X 80-character solid-state LCD display and an 81-key full-stroke keyboard.

a. Model: 1010

b. Manufacturer: Terra Computer Systems
3860 148th Ave. N.E.
Redmond, WA 98052
(Phone) (206) 883-7300

c. Pricing: $3,395.00

d. Operation: It is operated and programmed through the keyboard and real-time data may be displayed on the LCD array. It is used to monitor and control other pieces of data acquisition equipment in the field. Acquired data are stored in its bubble memory and may be transferred to a large computer for data reduction or calculation. This may be done by the Terracomputer and then printed.

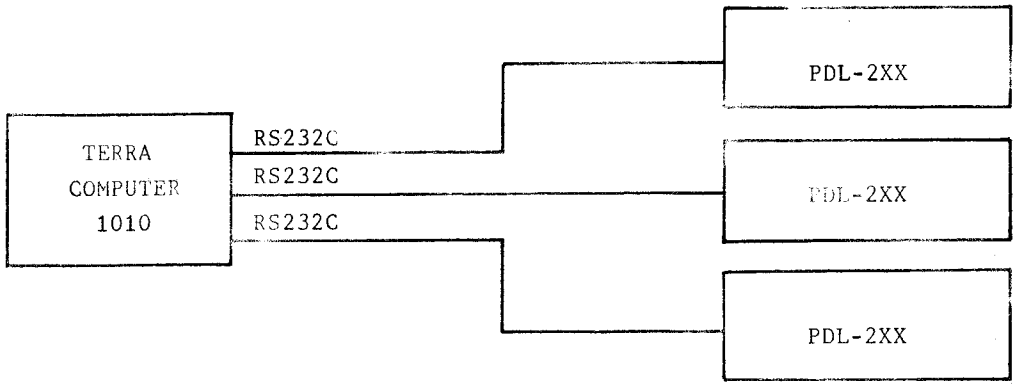

CONFIGURATION A

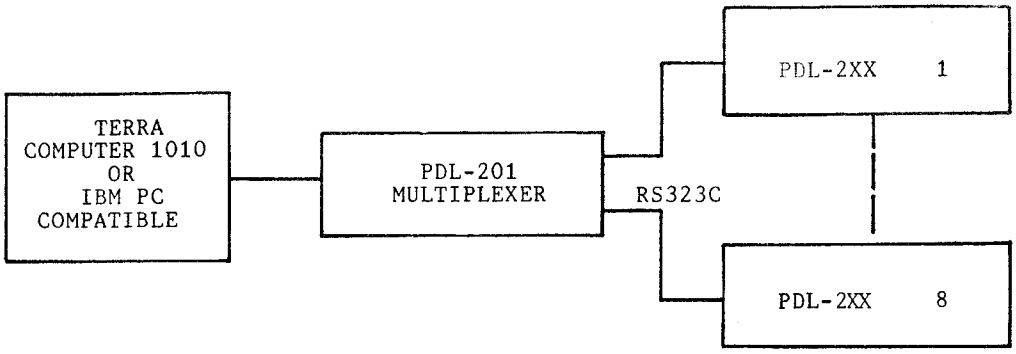

CONFIGURATION B

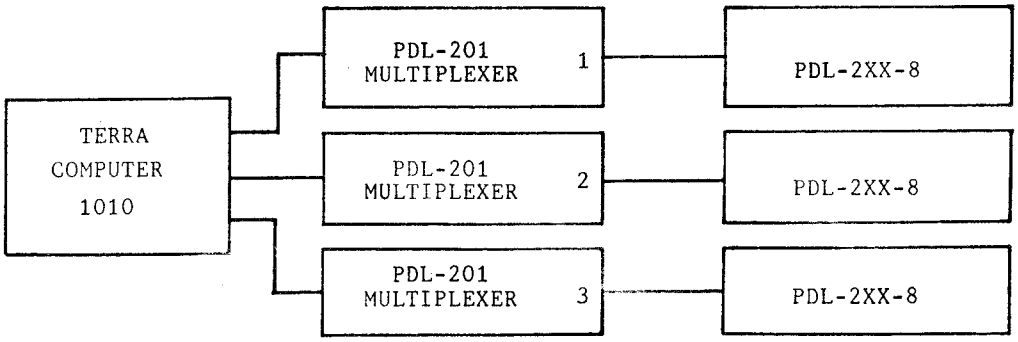

CONFIGURATION C

MODEL 1010 COMPUTER SYSTEM CONFIGURATION GUIDE

e. Prerequisites: CP/M-80 operating system. Most features needed are standard.

f. Input specifications: EIA RS-232-C; full modem control; 300 - 38.4 kband. Eight-bit parallel selectable to Centronics printer or SASI/SCSI to disk. IEEE-488 optional.

g. Output specifications: Same as input.

h. Interfacing: The Terra computer may be interfaced to any equipment that communicates using the EIA RS-232-C interface. Three serial ports are available for communications. A built-in modem is optional.

i. Power requirements and recommendations: Sealed, lead acid gel cells; 8 VDC, 2.5 AH, rechargeable from a 90-120 VAC, 60 Hz source. Operating time per charge is 25 hours.

j. Compatible equipment: PDL-201 multiplexer and Terra PDL-200 series data acquisition modules which are shown in para. IV-14-13.

k. Software available: Supports most languages. The computer comes standard with 9 CP/M utilities and 9 subroutines that support data acquisition and communications. A huge selection of public domain application programs that run under CP/M are available.

l. Environmental conditions: Operating temperature: 0 to 55 °C. Humidity: 0 to 95% RH. Enclosure is dust-tight, drip-proof (NEMA).

m. Application information: Automation of data acquisition. The Terra computer 1010 and the Terra computer PDL-2XX data acquisition modules are ideal for replacing a manual clipboard and pencil method of data logging in the field. The system may be portable as well as being a multichannel fixed system with limited data analysis.

n. Comments: Reliability and MTBF is unknown.

Controllers

IV-3-1. **Type and description:** Multiplexer, serial-line, four-channel, asynchronous. This serial-line multiplexer provides four serial line channels for simultaneous communication with modems, terminals and EIA RS-232-C-compatible data acquisition units. The serial-line channels are EIA-compatible and include data set control signals to allow dial-up, auto-answer operation with modems operating in full-duplex mode.

a. Model: DZV11

b. Manufacturer: Digital Equipment Corporation
146 Main Street
Maynard, MA 01754
(Phone) (800) 343-4040

c. Pricing: $900.00

d. Operation: The DZV11 controller plugs into the Q-bus of a MicroVAX, PDP 11/23 or LSI-11 microcomputer and provides four independent serial data channels to other systems and/or peripherals. Baud rates of 50 to 9600 are selectable by software program. All four channels conform to EIA RS-232-C standards and are compatible with Bell 100 or 200 series or equipment data sets (modems).

e. Prerequisites: A CPU that has the Q-bus and a software operating system that supports communications.

f. Input specifications: EIA RS-232-C standards. Variable character format of from 5- to 8-bit character length; one or two stop bits for 6- to 8-bit characters; one or one and one-half stop bits for 5-bit characters.

g. Output specifications: Same as for input.

h. Interfacing: Not applicable.

i. Power requirements and recommendations: 5 VDC at 1.2 A and ±12 VDC at 0.4 A. These voltages are supplied by the computer power supply. No external power is required.

j. Compatible equipment: Any EIA RS-232-C/CCITT V.28 terminals or other systems and the MicroVAX I (see para. IV-2-5) and PDP-11/23 PLUS (para. IV-2-6).

k. Software available: The operating systems for the MicroVAX and PDP-11/23 support this controller.

l. Environmental conditions:

Operating temperature: 10 to 40 °C
Operating humidity: 20 - 80% RH

m. Application information: Local or remote interconnection between host Q-bus system and data acquisition units, data loggers, terminals, plotters, and other computer systems.

n. Comments: This controller is available from many sources in addition to DEC. Immediate delivery of new controllers is available from second source computer companies. MDB Systems, Inc. 1995 North Batavia St. Orange, CA 92667 markets an 8-channel Q-bus multiplexer similar in operation.

IV-3-2. Type and description: **Controller, line printer and floppy disk.** Interfaces two line printers and two floppy disk drives to a Gould CONCEPT/32 minicomputer.

a. Model: 8031

b. Manufacturer: Gould, Inc., Computer Systems Div.
6901 W. Sunrise Blvd.
Fort Lauderdale, FL 33313
(Phone) (305) 587-2900

c. Pricing: $3350.00 with a GSA discount of 19-23% depending on delivery items

d. Operation: This controller is microprocessor-based and mates with the I/O bus in a Gould computer. It has a 2-kbyte buffer for floppy disk and a 256-byte buffer for each printer. It supports double-sided, double-density floppy disks.

e. Prerequisites: Hardware - a Gould CONCEPT/32 computer with an input/output processor (IOP). Software - MPX-32 operating system.

f. Input specifications: Not available.

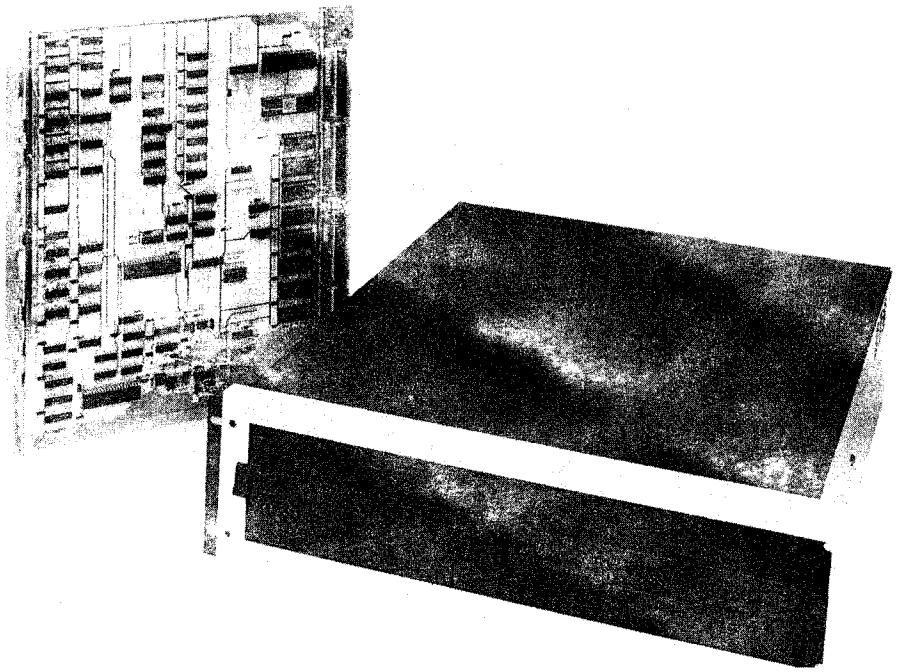

MODEL 8031 CONTROLLER (PHOTO COURTESY OF GOULD, INC.)

g. Output specifications: Not available.

h. Interfacing: Only compatible with Gould computers.

i. Power requirements and recommendations: +5 VDC @ 2.5 A and -5VDC & 0.1 A.

j. Compatible equipment: Gould line printers and disks.

k. Software available: Gould MPX-32 operating system.

l. Environmental conditions: Operating temperature: 10 to 40 °C. Humidity: 20 to 80% RH.

m. Application information: Essential for peripherals, line printers and floppy disks on the Gould computers.

n. Comments: None.

IV-3-3. Type and description: **Controller, IEEE-488 bus.** This functions as a system controller for up to 14 GPIB instruments via an IEEE-488 standard bus.

a. Model: 8024 IEEE-488 bus controller.

b. Manufacturer: Gould, Inc., Computer Systems Div.
6901 W. Sunrise Blvd.
Fort Lauderdale, FL 33313
(Phone) (305) 587-2900

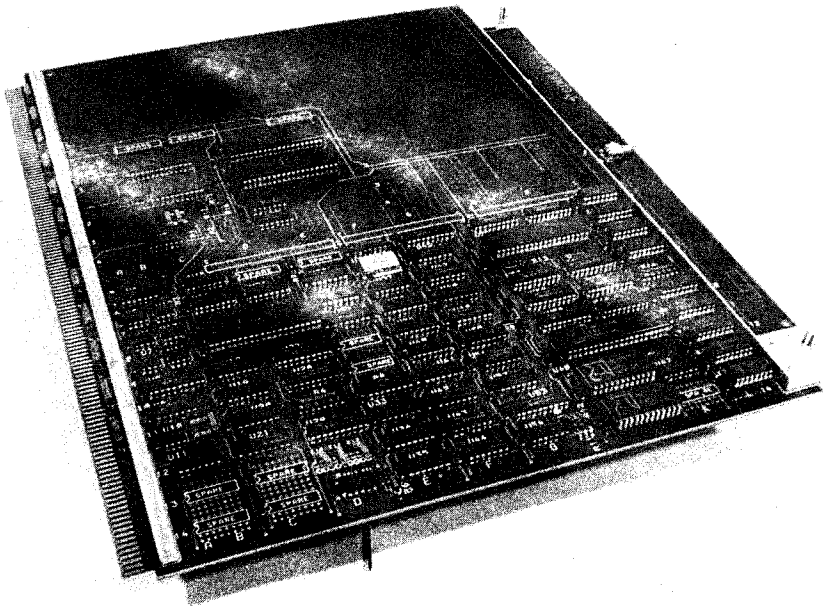

MODEL 8024 CONTROLLER (PHOTO COURTESY OF GOULD, INC.)

c. Pricing: $2750.00. GSA discount of 19-23%.

d. Operation: The model 8024 IEEE-488 controller is an 8-bit microcomputer (Z80A) based input/output interface between the Gould computers and a variety of devices.

e. Prerequisites: Gould CONCEPT/32 series of 32-bit minicomputers, 1833 software option and FORTRAN.

f. Input specifications: Standard IEEE-488 compatible signals.

g. Output specifications: Same as input specifications.

h. Interfacing: Compatible only with Gould computers.

i. Power requirements and recommendations: +5 VDC & 2 A.

j. Compatible equipment: GPIB and HPIB instruments.

k. Software available: Gould option 1833 IEEE-488 bus controller software that consists of a handler, a task capable of controller initialization and a set of FORTRAN-callable subroutines.

l. Environmental conditions: Operating temperature: 10 to 40 °C. Humidity: 10 to 90% RH.

m. Application information: Provides control for IEEE-488 instruments and data acquisition units.

n. Comments: None.

IV-3-4. **Type and description: Controller, asynchronous.** The Gould eight-line asynchronous controller is a multiple terminal/modem interface available in EIA RS-449/423, EIA RS-232-C and current loop versions. Each of the eight ports may be configured to run in half-duplex communications mode. It plugs into an IOP slot in a Gould CONCEPT/32 computer.

a. Model: 8512-2 eight-line asynchronous controller.

b. Manufacturer: Gould, Inc., Computer Systems Div.
6901 W. Sunrise Blvd.
Fort Lauderdale, FL 33313
(Phone) (305) 587-2900

c. Pricing: $2500.00. GSA discount of 19-23% available.

d. Operation: The controller has an on-board microprocessor that multiplexes each of the eight communications lines and transfers data to and from the computer I/O bus. Its control program is stored in a ROM. A distribution panel is available which consists of eight connectors mounted on a 19-inch-wide rack mountable panel.

e. Prerequisites: Gould CONCEPT 32/27 series of 32-bit minicomputers.

f. Input specifications: EIA RS-232-C, RS-449 and current loop. Baud rates up to 19.2 kbaud. Data format selectable for 5,6,7 or 8 bits.

g. Output specifications: Same as input specifications.

h. Interfacing: Compatible with Gould CONCEPT/32 IOP.

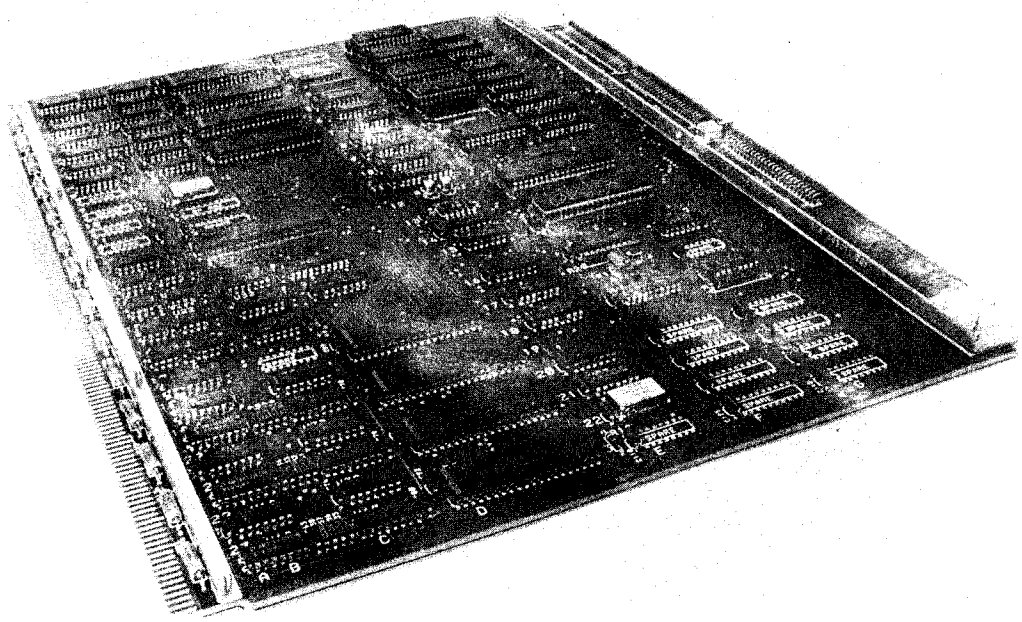

MODEL 8512 CONTROLLER (PHOTO COURTESY OF GOULD, INC.)

i. Power requirements and recommendations: +5 VDC and -5 VDC @ 2.5 amps.

j. Compatible equipment: EIA RS-232-C, RS-449, RS-423 and 20-mA current loop peripherals.

k. Software available: This controller is supported by the Gould MPX-32 and UTX/32 operating system.

l. Environmental conditions: Operating temperature: 0 to 40 °C. Humidity: 5 to 95% RH.

m. Application information: This controller may only be used with a Gould 32-bit minicomputer. It provides serial communications to eight terminals and/or data acquisition units that have serial communications capability.

n. Comments: None.

IV-3-5. **Type and description: Controller, IEEE-488 instrumentation bus.** This controller provides an interface between PDP-11/23 or MicroVAX I computers and programmable instruments that conform to ANSI/IEEE standard 488-1975. This controller supports up to 15 devices as talkers or listeners on the bus.

a. Model: MDB-MLSI-IBV11
DEC-IBV11-A

b. Manufacturer: MDB Systems, Inc.
1995 North Batavia St.
Box 5508
Orange, CA 92667-0508
(Phone) (714) 998-6900

c. Pricing: $471.00

d. Operation: The MLSI-IBV11 controller plugs into the back plane of a PDP-11/23 PLUS or MicroVAX computer. Switches on the controller provide user-selectable address and interrupt vector. A 12-ft. cable is included to connect to the first instrument on the instrument bus. Additional instruments may be daisy-chained from the first instrument.

e. Prerequisites: A CPU that contains the Q-bus for I/O control and software driver to transfer data over the IEEE-488 bus.

f. Input specifications: 16-line microcircuit logic levels that conform to IEEE-488 specifications.

g. Output specifications: Same as input specifications.

h. Interfacing: Not applicable.

i. Power requirements and recommendations: 5 VDC @ 0.8 A which is supplied by the computer power supply.

j. Compatible equipment: PDP 11/23 (See para. IV-2-6) and more than 2000 instruments by numerous manufacturers.

k. Software available: Utility and driver programs are supplied as MACRO source files which may be assembled as FORTRAN, BASIC, or MACRO-callable subroutines by the operating system.

l. Environmental conditions:
Operating temperatures: 10 - 40 °C
Operating humidity: 20 - 80% RH

m. Application information: The model IBV11 controller provides a plug-compatible link between any computer that employs the Q-bus and IEEE-488 compatible instruments. Most data acquisition hardware vendors offer optional IEEE-488 interface compatibility for their products. This gives the user the means to select and build a data acquisition system to fit his needs.

n. Comments: Any Hewlett-Packard products available with HP-IB capability are compatible with the model IBV11 controller.

IV-3-6. **Type and description: Controller, IE-488.** MetraByte's IE-488 GPIB I/O expansion board for the IBM, KAYPRO, COMPAQ and AT&T personal computers is designed to plug directly into one I/O slot inside of the computer. The GPIB handles 14 other talker/listener devices. The IE-488 hardware handles all of the system timing for the IEEE-488 bus. The controller used in the hardware is the NEC uPD7210 LSI chip and completely complies with the IEEE-488-1978 standard.

a. Model: IE-488 Controller

b. Manufacturer: MetraByte Corporation
254 Tosca Drive
Stoughton, MA 02072
(Phone) (617) 344-1990

c. Pricing: IE-488-$395.00; C88-01 mating cable- $75.00.

d. Operation: The IE-488 has a built-in 12-kbyte ROM interpreter which handles all of the required initialization and protocol functions required to use the IEEE-488 bus. No disk files with driver routines are needed. The interpreter includes a group of subroutines which may be used to condition the data

before data transfer when using assembly language programs.

e. Prerequisites: The C88-01 cable is required to mate the IE-488 board with the IEEE-488 bus.

f. Input specifications: IEEE-488-compatible signals. Data transfer rate of 450 kbytes per second using DMA.

g. Output specifications: Same as input.

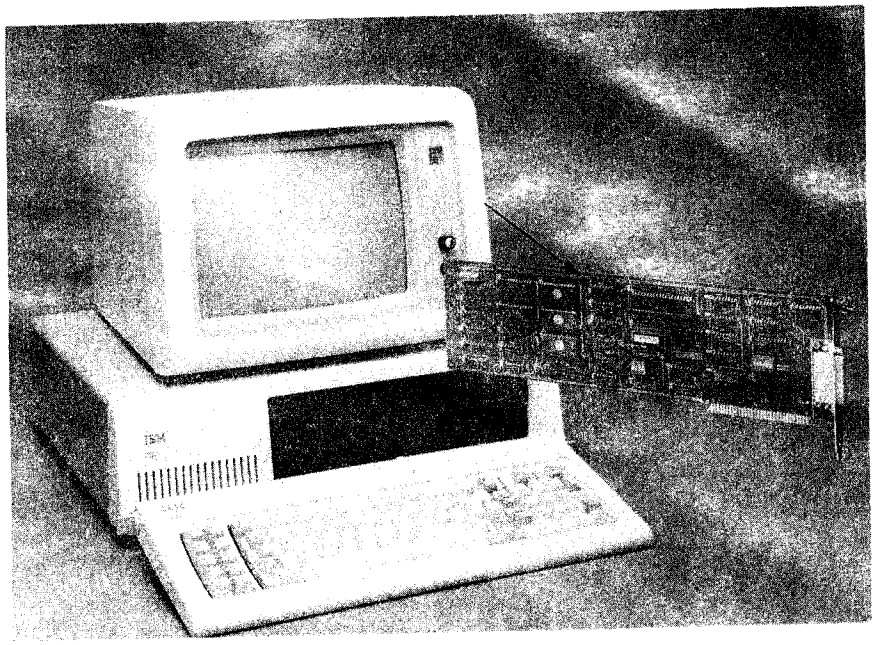

IE-488 CONTROLLER (PHOTO COURTESY OF METRABYTE CORP.)

h. Interfacing: GPIB and HPIB compatible instruments may be connected to the IE-488 controller by using a special cable, part number C88-01, available from MetraByte.

i. Power requirements and recommendations: +5Vdc, 850 mA typical.

j. Compatible equipment: IBM, KAYPRO, COMPAQ, and AT&T personal computers. Reference paras. IV-2-16, IV-2-17, IV-2-18, IV-2-19, IV-2-4, and IV-2-3.

k. Software available: None required. Software to control the IE-488 controller is supplied with the hardware via a built in ROM.

l. Environmental conditions
Operating Temperature: 0 to 50 °C
Operating Humidity: 0 to 95% RH

m. Application information: The IE-488 controller provides the means for personal communication with IEEE-488-compatible instruments.

n. Comments: None.

IV-3-7. **Type and description: Quad Channel Interface Controller (QCIC).** The QCIC is a communications controller that features four duplex channels. Each duplex channel may be programmed to function as an asynchronous or synchronous transmitter and receiver. One of the duplex channels may also be programmed to transmit and receive data from a console device. It is a microprocessor-based controller that plugs into a MODCOMP Classic file type enclosure.

a. Model: 4804

b. Manufacturer: Modular Computer Systems, Inc.
1650 W. McNab Road
Ft. Lauderdale, FL 33310
(Phone) (305) 974-1380

c. Pricing: $3,225.00

d. Operation: It operates in register I/O (non-DMA) using two modes: (1) interrupt mode of operation, and (2) data-ready test and transfer mode of operation. Baud rate is programmable from 50 to 19.2 kbaud. Some of the functional features are switch selectable.

e. Prerequisites: CLII/15 Classic computer requires one chassis slot.

f. Input specifications: RS-232-C, balanced RS-422, unbalanced RS-423, and current loop.

g. Output specifications: Same as input.

h. Interfacing: Requires a dual-channel piggy-back module to adapt the QCIC to the type of input signal, RS-232-C, current loop, etc.

i. Power requirements and recommendations: +5VDC @ 6.5A, +12VDC @ 40mA, and -12VDC @ 36mA.

j. Compatible equipment: MODCOMP Classic II/15 computer, (See para. IV-2-20), and any serial communications device.

k. Software available: Supported by MODCOMP MAX IV operating system.

l. Environmental conditions:
Operating Temperature: 0 to 55 °C
Operating Humidity: 10 to 90% RH

m. Application information: Serial communication with four separate devices such as data loggers, data acquisition units, CRT terminals, printers, and graphics.

n. Comments: The QCIC may be used with all MODCOMP computers, either plugged into a computer slot or installed in a peripheral controller enclosure, model 4911. Reliability is 100,000 hr.

IV-3-8. Type and description: **GPIB11V-1 IEEE-488 Bus Controller.** The GPIB11V-1 interfaces the Digital Equipment Corporation, PDP-11/23, LSI-11, Micro VAX I, and Micro VAX II to the IEEE-488-1978 standard GPIB. Up to 14 instruments may be controlled by a computer through the GPIB11V-1. An additional controller, type GPIB11V-2, is required for DMA I/O operation by the computer.

a. Model: GPIB11V-1

b. Manufacturer: National Instruments
12109 Technology Blvd.
Austin, TX 78727
(Phone) (800) 531-5066

c. Pricing: GPIB11V-1 - $795.00
GPIB11V-2 - (DMA Option) $1,495.00

d. Operation: The GPIB11V-1 plugs into the back plane of a computer that has the DEC Q-bus. The GPIB11V-2 requires a second slot on the Q-bus. The -1 provides programmed I/O capability and functions without the -2; however, both are required for direct memory access (DMA) which enables this interface to transfer data independent of the CPU at rates up to 330 kbytes /sec.

e. Prerequisites: A computer containing the DEC Q-bus.

f. Input specifications: Microcircuit logic levels conforming to the IEEE-488 (1978) standard.

g. Output specifications: Same as input.

h. Interfacing: Any GPIB- and HPIB-compatible instruments may be cabled directly to the GPIB11V-1. Maximum cable length is 20 meters.

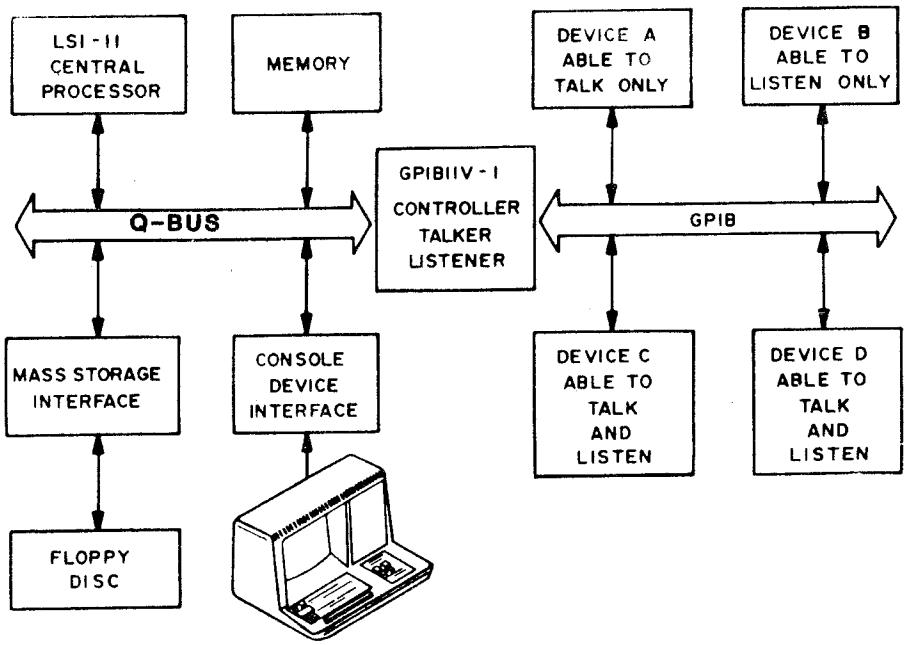

FIGURE 37. INSTRUMENTATION SYSTEM USING THE GPIBIIV-1

i. Power requirements and recommendations: 5VDC, 1A, furnished by the computer power supply.

j. Compatible equipment: PDP-11/23 (para. IV-2-6), Micro VAX (para. IV-2-5).

k. Software available: The standard package for the DEC Q-bus includes all necessary hardware plus a software

handler that is loadable under RSX, RT and TSK operating systems with language interfaces to FORTRAN and BASIC.

l. Environmental conditions:
Operating Temperature: 0 to 50 °C
Operating Humidity: 10 to 90% RH.

m. Application information: The GPIB11V-1 provides a plug-compatible link between a computer that has the DEC Q-bus and IEEE-488 compatible instruments. Data rates of 5 kbytes per second may be achieved with the GPIB11V-1 DMA controller.

n. Comments: National Instruments specializes in IEEE-488 controllers for several brands of computers.

IV-3-9. **Type and description: IEEE-488 bus controller.** The GPIB-600 bus controller is a stand-alone GPIB controller with complete talker, listener, and controller functions. An RS-232-C port is included in each GPIB-600 with a second optional port. These ports may be used for connection to terminals, printer, or computers. The basic controller comes with 16 kbytes of RAM and 8 kbytes of ROM, expandable to 32 kbytes RAM, 32 kbytes EPROM, and 16 kbytes EEPROM.

a. Model: GPIB-600

b. Manufacturer: National Instruments
12109 Technology Blvd.
Austin, TX 78727
(Phone) (800) 531-5066

c. Pricing: GPIB-600 $1,800.00
IBFORTH $150.00

d. Operation: This dedicated controller is based upon the Z80A microprocessor and provides the complete set of GPIB functions. The operating system and a monitor program are contained in EPROM, and complete documentation is provided for easy customizing by the user.

e. Prerequisites: None.

f. Input specifications: IEEE-488 (1978) and EIA RS-232-C-compatible signals.

g. Output specifications: Same as input.

h. Interfacing: Not applicable.

i. Power requirements and recommendations: 120 VAC, 50/60 Hz. 0.18A nominal.

j. Compatible equipment: Any IEEE-488 instrument and most RS-232-C devices.

k. Software available: IBFORTH is available from National Instruments.

l. Environmental conditions: Operating temperature: 10 to 40 °C. Humidity: 10 to 95% RH. MTBF - 100,000 hr.

m. Application information: Provide communications between a computer with an RS-232-C port and the IEEE-488-compatible instruments.

n. Comments: National Instruments model 610 bus controller may also be used for the same application, but with less flexibility. The model 610 is priced at $695.00.

IV-3-10. **Type and description: IEEE-488 Controller.** National Instruments' GPIB-PC board provides complete GPIB functionality on a half-size board that is compatible with the IBM, Compaq, KAYPRO, and AT&T personal computers. The GPIB-PC is implemented with the NEC UPD7210 GPIB LSI chip and programmable logic array.

a. Model: GPIB-PC

b. Manufacturer: National Instruments
12109 Technology Blvd.
Austin, TX 78727
(Phone) (800) 531-5066

c. Pricing: GPIB-PC, $385.00
TBASIC for PC, $795.00

d. Operation: Eight computer I/O addresses are required. Software support for the GPIB-PC includes a handler that is installed as part of the PC DOS/MS-DOS operating system, both high-level and low-level software calls, and a configuration utility.

e. Prerequisites: Software package - TBASIC for the PC.

f. Input specifications: IEEE-488 compatible signals. Data transfer speeds of 300 kbytes per second using DMA.

g. Output specifications: Same as input.

h. Interfacing: GPIB- and HPIB- compatible instruments may be connected to the GPIB-PC interface with a standard IEEE-488 cable.

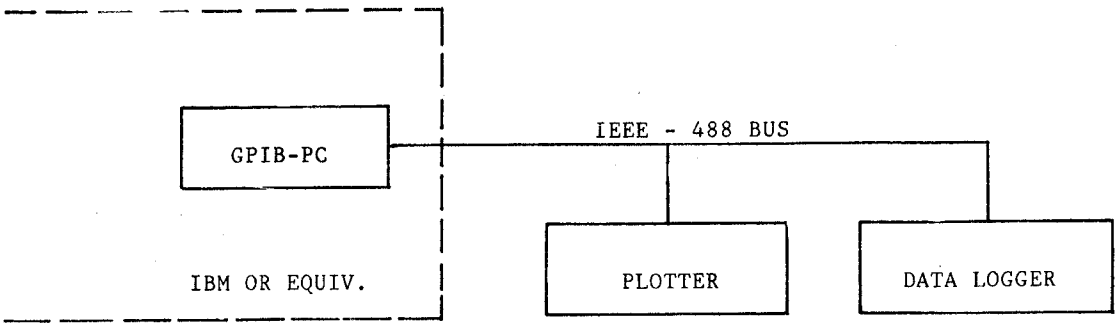

FIGURE 38. GPIB-PC, IEEE-488 CONTROLLER

i. Power requirements and recommendations: 5 VDC which is supplied by the computer when the GPIB-PC interface is installed in an expansion slot.

j. Compatible equipment: IBM PC (para. IV-2-17), IBM PC XT (para. IV-2-18), Compaq (para. IV-2-4), KAYPRO 16/286i (para. IV-2-19), and AT&T 6300 (para. IV-2-3).

k. Software available: Refer to "Available Data Collection and Reduction Software", Report 3., para. V-4-3.

l. Environmental conditions: Operating temperature: 0 to 50 °C. Humidity: 10 to 90% RH.

m. Application information: The GPIB-PC provides the means for personal computers to communicate with IEEE-488-compatible instruments.

n. Comments: None.

Peripheral Memory Devices

IV-4-1. Type and description: Memory device, peripheral, Alpha Nuclear model 610, bubble memory data storage system. The model 610 is a nonvolatile data storage system based on bubble memory technology. It is primarily designed for use with remote automatic data acquisition systems. Through the use of the standard EIA RS-232-C communication protocol, data or programs are recorded in the nonvolatile memory module for subsequent playback and processing. The model 610 has a capacity of 128 k ASCII characters and is generally supplied as a pair of modules. When one unit is full, it may be exchanged, thus providing uninterrupted data recording capability. The model 610 needs an 18-V to 28-V DC voltage source. Thus, it may be operated by a battery for remote applications. During periods of inactivity of the host data acquisition system, the unit automatically powers down to a quiescent state to conserve power and immediately returns to the active state when further data are received.

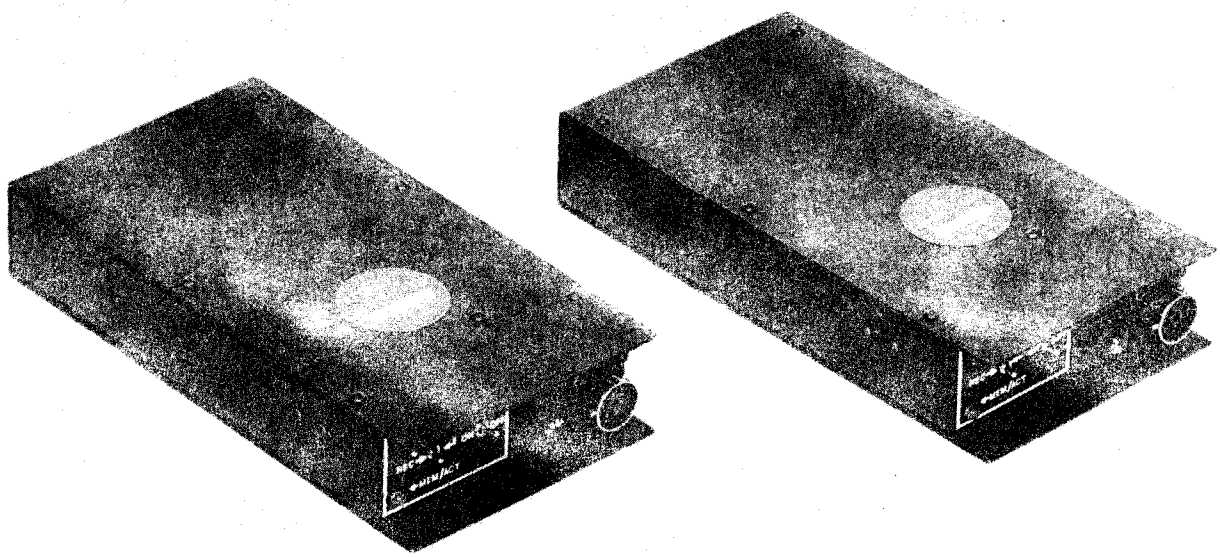

MODEL 610 MEMORY DEVICE (PHOTO COURTESY OF ALPHA NUCLEAR)

a. Model: Model 610

b. Manufacturer: Alpha Nuclear
6380 B Viscount Road
Mississauga, Ontario, Canada L4V1H3
(Phone) (416) 676-1364

c. Pricing: $1,800.00

d. Operation: Data are recorded in memory as ASCII characters formatted into lines, where each line of bubble memory may be up to 256 characters long. A line is determined by the data acquisition/logging system by issuing a carriage return character. If an incoming line of data is greater than 256 characters, the overflow automatically begins a new line. The data may be formatted as 500 lines of 256 characters each, or any combination of line lengths and number of lines to a maximum of 128 k characters. Data input rate may be at 300, 2400, or 4800 baud, or other specified baud rates. If no data are received for 5 seconds, the bubble memory circuitry is automatically powered down.

In the playback mode, the system responds to various commands from a computer or terminal to allow its data to be transmitted as a continuous block or parts thereof. The data are transmitted until end-of-file with or without a host-issued pause or resume command. Alternately, special commands permit one line or any specified number of lines to be transmitted or bypassed. Additional commands allow the memory to be erased, tested, or interrogated for the available storage space which remains. Data playback and storage may be accomplished with many personal computers by using the appropriate utility program.

e. Prerequisites: EIA RS-232-C-compatible data sending and receiving equipment.

f. Input specifications:
Data capacity: 128 k ASCII characters
Communication: EIA RS-232-C full duplex serial data format

g. Output specifications: Same as input specifications.

h. Interfacing: Compatible with equipment using the EIA RS-232-C format.

i. Power requirements and recommendations: 18 to 28 VDC, 6 mA standby, 350 mA active.

j. Compatible equipment: The model 610 may receive data from any device using the standard EIA RS-232-C data format. Data playback and storage may be accomplished with many personal computers by using an appropriate utility program.

k. Software available: The model 610 requires that its computer use a standard utility program that lets the user configure the computers EIA RS-232-C I/O format. An example of the type of program would be the "Visiterm" program produced by Visi Corp to run with the Apple II plus on the IBM PC. Also, Alpha Nuclear carries software packages for several brands of personal computers including the IBM PC.

l. Environmental conditions:
Operating temperature: 0 to 50 °C
-20 to 70 °C
(optional)

m. Application information: The model 610 is generally used as a replacement for a paper tape, a cassette tape, or a disk storage system for applications in harsh environments. It may store data from a remote data acquisition system and then be carried to a central processing station where its stored data may be processed.

n. Comments: None.

IV-4-2. Type and description: Memory device, portable, solid state. The Model 8110 PortaPac is a nonvolatile data storage device using solid state memory devices with an internal battery backup. It can be used with remote automatic data acquisition systems. Through the use of standard switch selectable communication protocols, data or programs are recorded in the nonvolatile memory module for subsequent playback and processing. Standard EIA RS-232-C communication protocols are used.

a. Model: PortaPac 8110

b. Manufacturer: INMAC
2465G Augustine Dr.
Santa Clara, CA 95051
(Phone) (408) 727-1970

c. Pricing:

Model 8110, 64k memory	$795.00
Model 8110-A, expansion chassis	$640.00
Model 8110-1, 128k memory	$1,095.00
Model 8110-2, 192k memory	$1,395.00

d. Operation: Data are recorded in memory as ASCII characters. The PortaPac can be ordered in various buffer sizes ranging from 16 kbytes to 192 kbytes. Five front panel switches allow the user to perform the following functions:

- fill memory with hex 'FF' byte
- emulate host or terminal
- reset and restart unit
- transmit or receive data
- start operation or pause temporarily.

Six front panel status LEDs indicate the following status: Host LED, Xmit LED, Start LED, Done LED, Power LED, and Battery Low LED. Baud rates are switch selectable from 50 to 19.2 kbaud. The PortaPac allows transfer of data between incompatible RS-232-C systems. The built-in battery pack allows the unit to be operated continuously for up to six hours. The low battery light will come on when recharging is required. Once the data is recorded, the unit will store the data for six months without recharging the battery pack.

e. Prerequisites: EIA RS-232-C compatible data sending and receiving equipment.

f. Input specifications: Data capacity: 16, 32, 64, 128, or 192 kbytes. Communication: EIA RS-232-C serial data format.

g. Output specifications: Same as input specifications.

h. Interfacing: Compatible with equipment using the EIA RS-232-C format.

i. Power requirements and recommendations:

Battery Power:	Nominal Voltage (V):	4.8
	Nominal Capacity (mAH):	425
AC Adapter:	95 to 122 VAC, 0.05 Amp	
DC Input:	9 to 16 VDC, 0.075 Amp	

j. Compatible equipment: The PortaPac may receive data from any device using the standard EIA RS-232-C data format. Data playback and storage may be accomplished with many personal computers by using an appropriate utility program.

k. Software available: The personal computer or data acquisition unit must have a utility program that allows the user to configure the RS-232-C port I/O format.

l. Environmental conditions:

Operating Temperature:	5 to 45 °C
Storage Temperature:	-35 to 85 °C
Operating Humidity:	10 to 95% RH
Dimensions:	1 in. H by 3.55 in. W by 9.1 in. in D.
Weight:	1 lb.- 7 oz.

m. Application information: The PortaPac can record data from a data acquisition system in the field, and then be carried to a central processing station where its stored data may be processed.

n. Comments: None.

IV-4-3. Type and description: **Cassette tape, peripheral storage unit.** The Byte Bucket Cassette System is a digital data storage device which can be used for data logging applications.

a. Model: Byte Bucket Cassette System, System II

b. Manufacturer: Analog and Digital Peripherals, Inc.
815 Diana Drive
Troy, Ohio 45373
(Phone) (513) 339-2241

c. Pricing: $1,184.00

d. Operation: The cassette recorder can be controlled by switch closures or by ASCII control codes sent to it in the data stream. The Byte Bucket Cassette System can be commanded to record (start recording a new file); to stop (close the current file, if recording); to rewind; to skip to the beginning of thew next file; and to play back. The system will operate in either the Binary or ASCII mode. The cassette tape will store 250 kbytes of formatted data per side of tape, and 500 kbytes without turning the tape. The unit also features a buffer size of 1 kbyte, automatic error checking, a maximum bit transfer rate of 12 kbits /sec, and baud rates of 110, 300, 1200, and 9600.

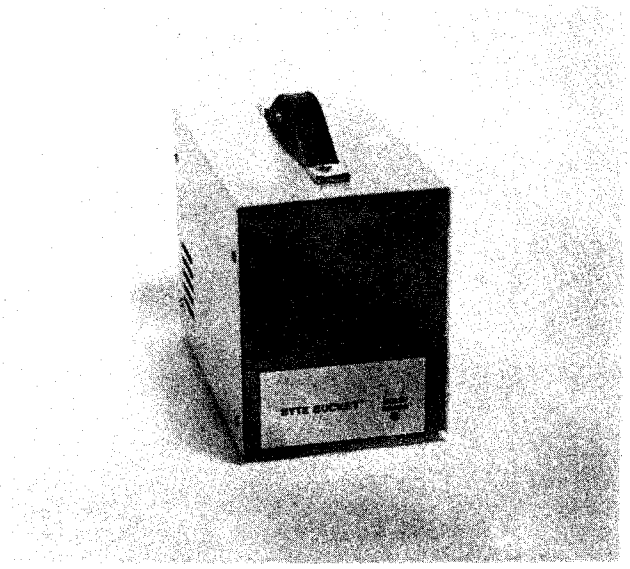

PORTABLE OR STAND-ALONE BYTE BUCKET (PHOTO COURTESY OF ADPI)

e. Prerequisites: EIA RS-232-C or IEEE 488 compatible data sending and receiving equipment.

f. Input specifications:
Data Capacity: 500 kbytes
Communication: EIA RS-232-C or IEEE 488
Data Format: RS-232-C-ISO-340, JIS-C6261

g. Output specifications:
Data Capacity: 500 kbytes
Communication: EIA RS-232-C or IEEE 488
Data Format: RS-232-C-ISO-340, JIS-C6261

h. Interfacing: RS-232-C asynchronous. IEEE 488.

i. Power requirements and recommendations: 115 VAC at 0.2 Amp.

j. Compatible equipment: Data acquisition systems and data processing systems with a RS-232-C interface or an IEEE-488 interface.

k. Software available: A utility program will be required to allow control of the tape system.

l. Environmental conditions:
Operating temperature: 10 to 45 °C
Operating humidity: 20 to 80% RH

m. Application information: The cassette tape can be used to record data from a data acquisition system at a remote site and then carried to a central data processing system and played back.

n. Comments: Other options which might enhance the operation of this device include a briefcase mounting, a CMOS battery operation, and manual controls.

IV-4-4. **Type and description: Floppy disk system, portable.** The IBM PC compatible RS-232-C system provides a versatile and portable means of transferring data (to or from) between the IBM PC (and similar systems) and any device using an RS-232-C interface.

a. Model: ADPI Easi-Disk RS-232 System 5 1/4 inch, System II, IBM PC Compatible

b. Manufacturer: Analog and Digital Peripherals, Inc.
815 Diana Drive
Troy, Ohio 45373
(Phone) (513) 339-2241

c. Pricing: $1,095.00

d. Operation: The floppy disk system features a soft sectored IBM PC formatted 5 1/4-in. disk with a capacity of 360 kbytes. Front panel controls and a 4 kbyte PROM control program allow the user to interface to a variety of data acquisition systems. Custom protocols may have to be developed for some systems, but this can be done at the factory. Several interface

options are available to allow connection to different systems. Other available features include automatic data verification, power fail protection, high reliability, and a rugged portable package.

e. Prerequisites: The system which will communicate with the disk system must have a utility program available which can be programmed with special characters to control the disk operation.

f. Input specifications:

RS-232-C: full duplex, asynchronous data rates up to 19.2 kbaud

RS-422: high-speed, full duplex, asynchronous data rates up to 200 kbaud

Parallel Interface: 8-bit parallel interface data rates up to 2 kbytes/sec

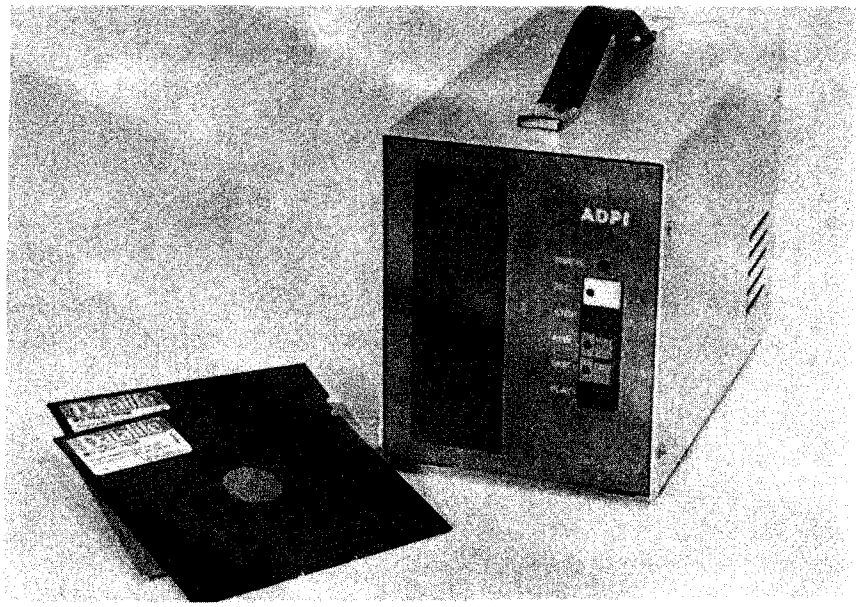

FLOPPY DISK SYSTEM (PHOTO COURTESY OF ADPI)

g. Output specifications: Same as input specifications.

h. Interfacing: Standard- RS-232-C
Option- RS-422
Option- Parallel interface

i. Power requirements and recommendations: 115 VAC at 0.2 A.

j. Compatible equipment: IBM PC or compatible personal computer.

k. Software available: CPM drivers available.

l. Environmental conditions: Operating temperature: 10 to 45 °C. Storage temperature: -40 to 70 °C. Operating humidity: 20 to 80% RH. Storage humidity: 5 to 95% RH.

m. Application information: Major application would be for field data logging.

n. Comments: Dust and grit will cause excessive head wear on floppy disk unit. Unit not recommended for outdoor use.

Disk Systems

IV-5-1. Type and description: **Disk, fixed/removable, subsystem.** This mass storage fixed disk subsystem is a unique alternative to conventional disk and tape technology for low-end and mid-range DEC Q-bus systems. The RC-25 disk features a 52-Mbyte capacity consisting of a 26-Mbyte Winchester fixed disk and a 26-Mbyte sealed removable cartridge. The sealed removable cartridge provides a one-to-one backup ratio and some advantageous alternatives to the disk/tape configuration. The advantage lies in the fact that the RC-25 cartridge matches the performance of the Winchester drive, so backup may be accomplished in a very short time freeing the RC-25 to store and transfer new data. Storage systems that use tapes or floppy disk are slower, since the performance and capacity of these do not match the Winchester disk. The complete system includes a fixed/removable drive, power supply, intelligent controller, and host interface. The single card intelligent controller of the unit is part of the disk drive. Traditionally, this class of storage subsystems was designed as only a drive; another manufacturer usually supplied the controller.

a. Model: DEC RC-25

b. Manufacturer: Digital Equipment Corporation
One Iron Way
P.O. Box 1002
Marlboro, MA 01752
(Phone) (617) 467-4198

c. Pricing: $8,500.00

d. Operation: The single 26-Mbyte fixed platter and the 26-Mbyte removable media cartridge are run on the same spindle and are powered by the same motor. The single-spindle system allows data to be interchanged and copied without the need for a second storage device like a floppy, tape, or another disk system. The drive uses an 8 in. coated oxide media for both the fixed and removable elements. The removable RC-25 media

cartridge is a sealed, contaminant-resistant unit that is easily loaded from the front of the drive. The controller manages disk accesses, data transfers, and performance optimizations. It also uses device-independent software through the mass storage control protocol (MSCP), the same protocol used by other DEC disk controllers. The RC-25 unit has an internal intelligence controller which provides the following features: internal buffering, seek ordering and overlapping, spiral read/write, fault detection and isolation diagnostics, error detection, automatic reentry and revectoring on errors, and software compatibility with other MSCP devices.

e. Prerequisites: A DEC computing system using the Q-bus data structure. Some of these systems include the MicroVAX I, the MicroVAX II, the PDP-11/23, and the PDP-11/23 plus (see paras IV-2-5 and IV-2-6).

f. Input specifications:

Peak transfer rate:	1250 kbaud
Seek time:	20-35-msec avg.55-msec maximum
Rotational latency:	10.5 msec
Avg. access time:	30.5-45.5 msec (depending on queue lgth)
Start time:	60 sec (includes cartridge air purge)
Stop time:	30 sec
Media characteristics:	
Formatted capacity:	52 Mbytes/drive 26 Mbytes/platter
Tracks per inch:	1000
Bits per inch:	12,350
Area density:	12.3 Mbits / in^2
Rotational speed:	2850 rpm
No. of data surfaces:	4 (2 per platter)
No. of heads/surface:	1
Servosystem:	embedded
Data organization:	
Sectors per track:	31
Bytes per track (host data):	15,872
Tracks per surface(host data):	821

g. Output specifications: Same as input specifications.

h. Interfacing: Communication with a Q-bus system is accomplished by a host interface and an intelligent controller, both included with this system.

i. Power requirements and recommendations:

Voltage:	120 V	240 V
Phasing:	single	single
Frequency:	60 Hz	50 Hz
Starting current:	10 A	6 A
Running current:	2.55 A	1.28 A
Plug type:	NEMA 5-15P	NEMA 6-15P
Receptacle:	NEMA 5-15R	NEMA 6-15R

j. Compatible equipment: The RC-25 disk unit is compatible with all DEC computing systems that use the Q-bus data structure. Some of these include the MicroVAX I, the MicroVAX II, the PDP-11/23, and the PDP-11/23 plus. (Refer to paras. IV-2-5 and IV-2-6 herein.)

k. Software available: Standard DEC software used for devices using the mass storage control protocol (MSCP).

l. Environmental conditions:

Temperature range:	10 to 40 °C
Relative humidity:	10 to 90% RH (noncondensing)
Max. wet bulb:	28 °C
Heat dissipation:	307 w
Altitude:	2450 m (8000 ft)

m. Application information: The RC-25 disk unit is designed to provide low-end and mid-range DEC Q-bus computing systems with a mass storage capability. Its Winchester fixed disk and its 26-Mbyte sealed removable cartridge provide one-to-one backup ratio and an alternative to disk/tape configurations.

n. Comments: None.

IV-5-2. Type and description: **Disk Systems, HP 9114A and the HP 9121S/D.** The HP 9114A and the HP 9121S/D are 3-1/2-in. microfloppy disk drive systems designed to provide additional storage capacity to the Hewlett-Packard family of portable and personal computers. The HP 9114A provides up to 710 kbytes of formatted storage capacity in a portable, battery-operated

package designed to be used by HP series 40 and series 70 portable computers. The HP 9121S/D provides up to 270 kbytes of formatted storage capacity and is designed to be used with the HP 150A personal computer. This drive is available in a dual, HP 9121D or a single, HP 9121S drive package.

a. Model: HP 9114A and HP 9121S/D

b. Manufacturer: Hewlett-Packard
P.O. Box 10301
Palo Alto, CA 94303-0890
(Phone) (213) 877-1282

c. Pricing: HP 9114A, $795.00
HP 9121D, $965.00
HP 9121S, $710.00

d. Operation: The HP 9114A works with the HP portable computers within a closed loop configuration with the HP interface loop (HP-IL), and is supported on the HP 110, series 40 and series 70. These 3-1/2-in. disk drives can read, write, and initialize double-sided media in single-sided format making them compatible with similar single-sided disk drives. This allows the user to transfer data between the HP portable computers and the HP 150 personal computers. The HP 9121S/D communicates with the host system through the HP-IB data bus. To operate, the unit only requires connection to the HP-IB channel of the supporting computer system.

e. Prerequisites: Compatible HP computer.

f. Input specifications:
Storage Capacity: HP 9114A, 710 kbytes
HP 9121S, 270 kbytes
HP 9121D, 540 kbytes
(270 kbytes / drive)

g. Output specifications: Same as input specifications.

h. Interfacing: The HP 9114A is designed to interface to the HP 110, series 40, and HP interface loop (HP-IL). The HP 9121S/D is designed to interface with the HP series 80 and the HP 150A computers via the HP interface bus (HP-IB).

i. Power requirements and recommendations:
HP 9114A: battery operated
HP 9121S/D: 120 VAC at 60 Hz

j. Compatible equipment: The HP 9114A works with the HP 110, series 40, and series 70 portable computers which include the HP 41 calculator, the HP 71B, and the HP 75D. The HP 9121S/D works with the HP series 80 and the HP 150A.

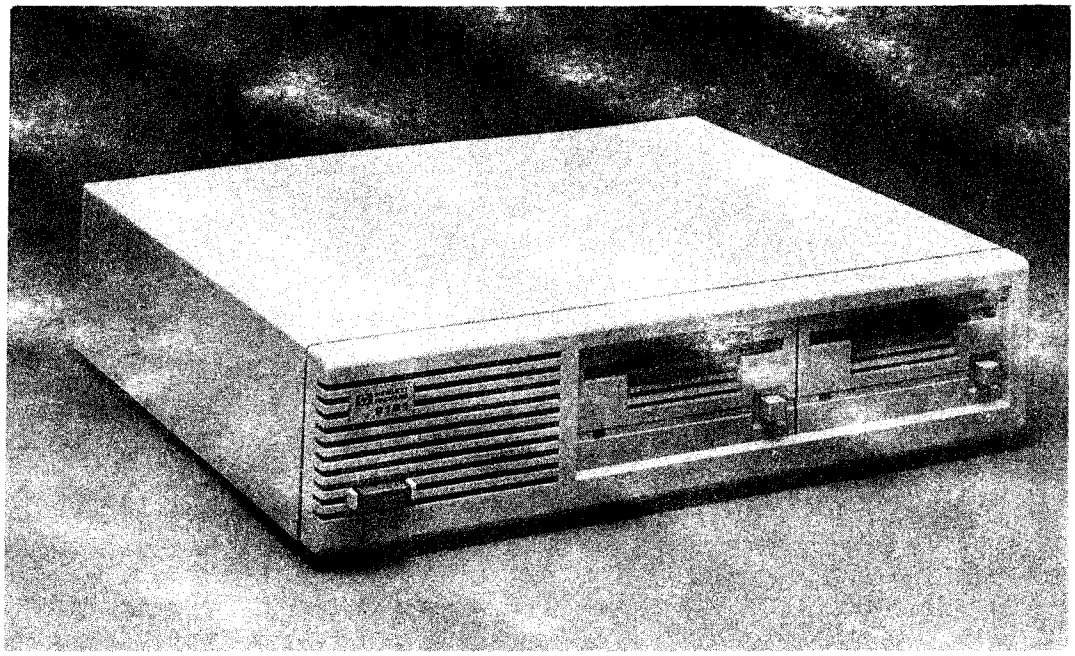

HP 9121S/D DISK SYSTEM (PHOTO COURTESY OF HEWLETT-PACKARD)

k. Software available: These disk systems are supported by HP system software.

l. Environmental conditions: These units are designed to operate in a computer room environment.

m. Application information: The HP 9114A and the HP 9121 S/D provide the storage capacity and performance needs for HP portable and personal computers.

n. Comments: None.

IV-5-3. **Type and description: Disk drive, Hewlett-Packard model 7941A.** The model HP 7941A is a 24-Mbyte fixed disk drive that includes an intelligent controller and power supply as standard equipment. The system uses a 5-1/4-in. plated disk

media for high storage densities and is contained in a stand-alone desktop cabinet. The HP 7941A is designed to meet the storage capacity and performance needs of entry-level, multiuser systems that support the HP-IB data format.

a. Model: HP 7941A

b. Manufacturer: Hewlett-Packard
1820 Embarcadero Road
Palo Alto, CA 94303
(Phone) (213) 877-1282

c. Pricing: $5,500.00

d. Operation: To operate the HP 7941A, the unit only has to be connected to the HB-IB channel of the supporting computer system. The system uses a 5-1/4-in. plated disk media for storage and features a "closed loop" servosystem and rotary actuator to facilitate data storage and retrieval. The controller is designed to complement the fixed disk performance and ensure the accuracy of the data stored and retrieved. It communicates with the host system through an HP-IB (also known as IEEE-488) interface that was Hewlett-Packard's CS/80 instruction set. This interface and instruction set permits additional storage devices to be easily added.

e. Prerequisites: An HP entry level computer that supports the CS/80 instruction set.

f. Input specifications:

Average controller overhead time:	10.1 ms
Average seek time:	30 ms
Average rotational delay:	8.3 ms
Average time to transfer 1 kbyte (at 625 kbytes/sec):	2 ms
Total average transaction time (excluding system overhead):	50.4 ms

Data Capacity:

Item	Data Bits Per Item	Data Bytes Per Item	Sectors Per Item	Tracks Per Item	Heads Per Item
Byte	8				
Sector	2,048	256			
Track	65,536	8,129	32		
Head	63,438,848	7,929,856	30,976	968	
7941A	190,316,544	23,789,568	92,928	2,904	3

g. Output specifications: Same as input specifications.

h. Interfacing: The HP 7941A communicates with the host system through an HP-IB interface that operates with a computer system using the HP CS/80 instruction set.

i. Power requirements and recommendations:
Voltage (true RMS): 115 V setting; 100 V, 115 V, 120 V single phase (inclusive tolerance range is 90 V to 132 V)
230 V setting; 220 V, 240 V, single phase (inclusive tolerance range is 180 V to 264 V)
Frequency: 47.5 to 66 Hz
Typical current (true RMS): 115 V setting; 0.87 A
230 V setting; 0.48 A
Typical power: 115 V setting; 65 W
230 V setting; 65 W

j. Compatible equipment: HP 1000A or a similar HP system that uses the CS/80 instruction set and has an HP-IB channel.

k. Software available: The HP 7941A is designed to run with the HP CS/80 instruction set.

l. Environmental conditions: This unit is designed to operate in a computer room environment.

m. Application information: The HP 7941A provides the storage capacity and performance needs for HP entry-level multiuser computer systems.

n. Comments: None.

IV-5-4. Type and description: **Disk system, MODCOMP 4185-1 disk subsystem.** The MODCOMP model 4185-1 disk subsystem is designed to provide a bulk storage capability for the MODCOMP single board minicomputer. The complete system consists of a CLASSIC style disk controller, internal device to controller cables, a disk drive chassis, power supplies, a 20-Mbyte disk drive, and a 653-kbyte removable diskette. The 20-Mbyte fixed disk is designed to meet the storage and performance needs of the single board minicomputer, while the 653-kbyte removable diskette

provides a convenient method of transporting software and data to other MODCOMP computer systems.

a. Model: MODCOMP 4185-1

b. Manufacturer: Modular Computer Systems, Inc.
P.O. Box 6099, 1650 West McNab Rd.
Ft. Lauderdale, FL 33310
(Phone) (305) 974-1380

c. Pricing: $9,000.00

d. Operation: The MODCOMP model 4185-1 disk subsystem is a Classic style moving head disk controller coupled with associated disk drives. The disk drives include a 20-Mbyte fixed disk and a removable 653-kbyte diskette. The Classic style controller, included to interface the disk drive with the CPU, requires one slot in any MODCOMP Classic style enclosure such as the model 4911 or the model 4912. Also, the controller must be mounted in the same cabinet as the disk drives due to cable restrictions.

e. Prerequisites: A MODCOMP single board Classic minicomputer and a MODCOMP Classic style enclosure such as the model 4911 or model 4912.

f. Input specifications: Storage capacity: 20-Mbyte fixed disk, and a 653-kbyte removable disk.

g. Output specifications: Same as input specifications.

h. Interfacing: The disk drives are designed to interface to a MODCOMP single board Classic minicomputer via a Classic style moving head disk controller included with the system.

i. Power requirements and recommendations: 120 VAC at 60 Hz.

j. Compatible equipment: The MODCOMP single board Classic minicomputer.

k. Software available: MODCOMP supports the model 4185-1 disk subsystem in its system software for the MODCOMP single board minicomputer.

l. Environmental conditions: Not available.

m. Application information: The MODCOMP 4185-1 is a disk system designed for mass storage applications for the MODCOMP single board minicomputer.

n. Comments: None.

IV-5-5. Type and description: **Magnetic disk system, Perkin-Elmer.** The Perkin-Elmer model MSM80 magnetic disk system is a removable mass media storage module designed for use with the Perkin-Elmer series 3200 computer systems. It has a storage capacity of 67.4 Mbytes and provides an effective way of backing up corresponding fixed disk units. These packs are convenient for transporting software and data to other series 3200 computers, possibly eliminating the need for magnetic tape.

a. Model: MSM80

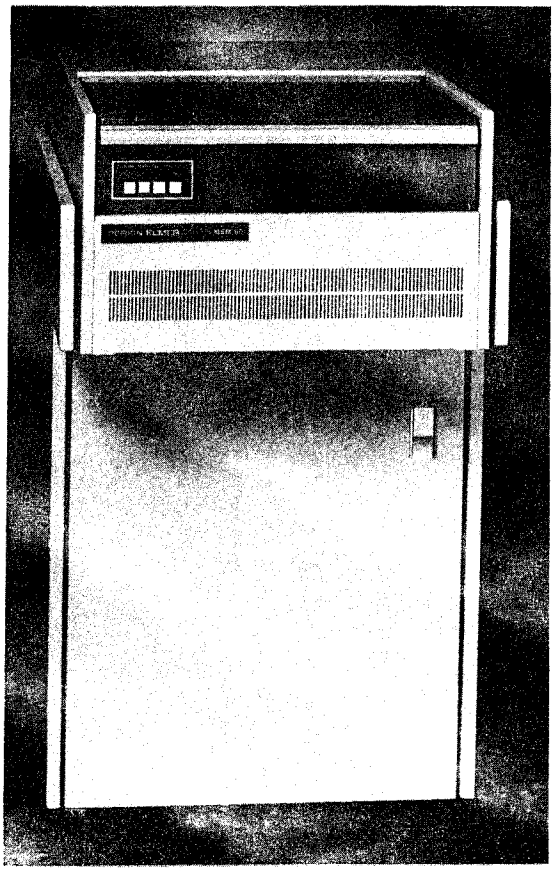

MSM80 DISK DRIVE (PHOTO COURTESY OF CONCURRENT COMPUTER CORP.)

b. Manufacturer: Concurrent Computer Corporation
A Perkin-Elmer Company
2 Crescent Place
Oceanport, NJ 07757
(Phone) (201) 870-4712

c. Pricing: Model MSM80 with either IDC or MSM controller is $23,500.00.

d. Operation: The MSM80 disk pack contains five platters with a formatted capacity of 67.4 Mbytes. The burst transfer rate is 1.2 Mbytes / sec. The average latency time and average seek time are 8.33 msec and 30 msec, respectively. A dual port option is available for the model MSM80. This option allows one drive to be accessed by two processors in a master/slave configuration. The master processor has full read/write privileges, while the slave processor only reads.

The MSM80 removable disk systems include an intelligent disk controller (IDC) or an MSM disk controller, both of which can handle up to four drives. The IDC is the newer single board controller that provides error correction (ECC), multisector buffering, and self-diagnostics. The MSM controller is a two-board design that performs basic data transfers, overlapped seek, and formatting operations.

e. Prerequisites: A Perkin-Elmer series 3200 computer system. (Refer to para. IV-2-21 herein.)

f. Input specifications:

	MSM80
Disk platters	5
Recording surfaces	5
Servo surface	1
Tracks per surface	823
Sectors per track	64
Bytes per sector	256
Data transfer rate	1.2 Mbyte/sec
Average seek time	30 msec
Average access time	38.33 msec
Platter size	14-in.
Bit rate	9.67 Mbits/sec
Code	MFM
Track density	384 TPI
Max. bit density	6038 BPI

g. Output specifications: Same as input specifications.

h. Interfacing: The model MSM80 is designed to be interfaced with any Perkin-Elmer series 3200 computer system.

i. Power requirements and recommendations:

Domestic (60Hz)	MSM80
Voltage (VAC)	120
Phase	Single
Starting current (A/sec)	30/12
Running current (amp)	8.9
Dissipation (BTU/hr)	2990

International (50Hz)	MSM80
Voltage (VAC)	220
Phase	Single
Starting current (A/sec)	22/12
Run current (amp)	4.6
BTU/hr	2860

j. Compatible equipment: Any Perkin-Elmer series 3200 computer system.

k. Software available: Perkin-Elmer software packages that may be used with the basic MSM80 include OS/32 (version 6.2), MTM, Edition VII Workbench (version 2.3), and Reliance Plus. All of these packages, except for Edition VII Workbench (version 2.3), may be used for the dual port option as well.

l. Environmental conditions: Operating temperature: 15 to 32 ^{o}C. Humidity: 20 to 80% RH noncondensing. Altitude: -305 to 2000 M.

m. Application information: The Perkin-Elmer model MSM80 is a removable disk system designed for mass storage applications for any Perkin-Elmer series 3200 computer system.

n. Comments: None.

IV-5-6. Type and description: **Disk drive, TECSTOR series 3/322 and 3/324.** The TECSTOR series 3/322 and series 3/324 disk drives are large capacity Winchester devices that offer the user over 315 Mbytes of storage capacity. Both units are the same in

operation and specifications. However, the series 3/322 is specially designed to work with Perkin-Elmer computer systems, and the series 3/324 is specially designed to work with Gould/SEL computer systems. No changes in the present software, diagnostics, or the controller of the computer system are needed to accommodate one of these disk drives to the appropriate computer.

a. Model: TECSTOR series 3/322 and 3/324

b. Manufacturer: TECSTOR Inc.
16161 Gothard Street
Huntington Beach, CA 92647
(Phone) (714) 842-0077

c. Pricing: Both models are $10,130.00

d. Operation: The series 3/322 and series 3/324 are rack mountable disk drives that use Winchester technology. They are available with a single port or dual ports and feature automatic spindle and head lock, a power-on confidence check, and CE initiated diagnostics. These disk systems use 823 cylinders at 383,040 bytes per cylinder to give the drive an unformatted byte storage capacity of over 315 Mbytes. The configuration of these drives consists of 6 disks, 9.5 surfaces, and 19 heads (2 per surface).

The unit addresses for a particular unit may be changed manually via a plug inserted in the front panel. Also on the front panel are "fault" and "write protect" switch indicators , and indicators for the following functions: READY, A CHANNEL SELECTED, B CHANNEL SELECTED, A CHANNEL RESERVED, and B CHANNEL RESERVED.

e. Prerequisites: A Perkin-Elmer computer system (para IV-2-21 and IV-2-22) is required for the series 3/322, and a Gould/SEL computer system is required for the series 3/324.

f. Input specifications: Storage capacity (unformatted) = 315,241,920 bytes. Average seek time = 29 msec. Latency time = 8.3 msec.

g. Output specifications: Same as input specifications.

h. Interfacing: The series 3/322 is designed to interface to a Perkin-Elmer computer system (para IV-2-21 and IV-

2-22), and the series 3/324 is designed to interface to a Gould/SEL computer system.

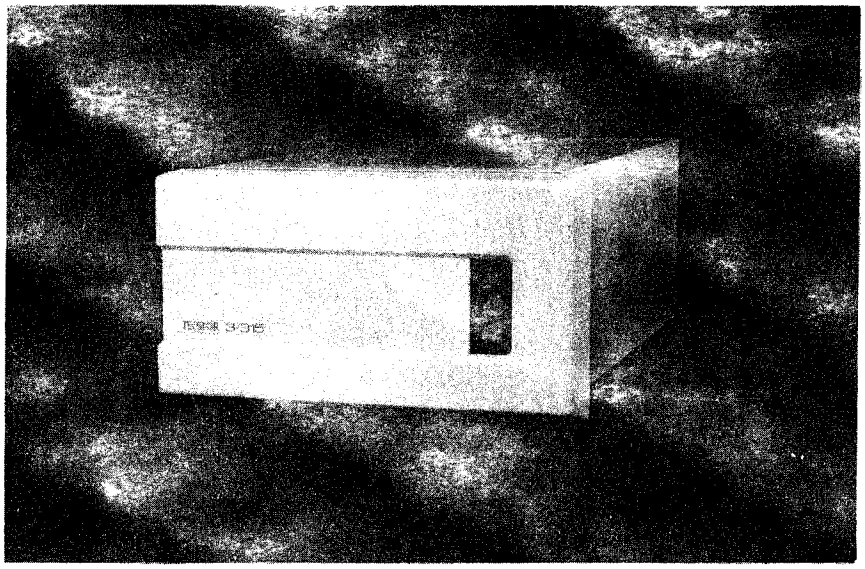

MODEL 300 SERIES DISK DRIVE (PHOTO COURTESY OF TECSTOR)

i. Power requirements and recommendations: 120 VAC at 60 Hz.

j. Compatible equipment: The series 3/322 is compatible with Perkin-Elmer computer systems and the series 3/324 is compatible with Gould/SEL computer systems.

k. Software available: System software for compatible computer systems contains all commands needed to operate disk drives.

l. Environmental conditions: This unit is designed to operate in a computer room environment.

m. Application information: The series 3/322 and the series 3/324 disk drive systems provide large storage capacities for Perkin-Elmer and Gould/SEL computer systems, respectively.

n. Comments: None.

Magnetic Tape Systems

IV-6-1. Type and description: **Tape unit, magnetic.** This magnetic tape system includes a tape transport with an integral formatter and a bus interface/controller module. It is a high performance, four-inch subsystem incorporating streaming technology, and is compatible with DEC computing systems that use the Q-bus. The TSV05 has a storage capacity of 40 Mbytes, high-speed streaming backup and front-loading automatic tape threading operation. This unit is available for rack mounting only.

a. Model: DEC TSV05

b. Manufacturer: Digital Equipment Corporation
One Iron Way
P.O. Box 1002
Marlboro, MA 01752
(Phone) (617) 467-4198

c. Pricing: $9,995.00

d. Operation: The TSO5 magnetic tape unit offers industry-standard 1600 bits/in. phase encoded format along with ANSI compatibility and a storage capacity of 40 Mbytes stored in 8-kbyte blocks. Depending on the operating system, the tape transport can accommodate a read/write speed of either 25 or 100 in./sec. This yields a maximum data transfer speed of either 40 or 160 kbits /sec. The tape transport is controlled by a single bus interface/ controller module. This module plugs into the bus back plane and communicates with the tape transport using standard software for loading and booting the system. Each transport must have a separate interface/ controller module.

e. Prerequisites: A DEC computing system using the Q-bus data structure.

f. Input specifications:

Recording density: 1600 bits/in.
Read speed: 25/100 in./sec (depending upon 40/160 kbits/sec operating system)
Capacity (2400-ft reel): 40 Mbytes in 8-kbyte blocks

g. Output specifications:
Write speed: 25/100 in./sec (depending upon 40/160 kbytes/sec operating system)

h. Interfacing: Communication with a Q-bus is accomplished with a bus interface/controller included with the tape system.

i. Power requirements and recommendations:
Tape transport: Optional 100 or 200 VAC
Interface/controller: Module plugs into system back plane
Voltage: +5 V
Current: 6.5 A

j. Compatible equipment: MicroVAX and PDP-11/23. (Refer to paras. IV-2-5 and IV-2-6 herein.)

k. Software available: Not applicable.

l. Environmental conditions: Not available.

m. Application information: The DEC TS05 magnetic tape unit (transport) is suited for disk backup and permanent mass storage of data.

n. Comments: None.

IV-6-2. Type and description: **Magnetic tape system, Density.** The Gould 125 ips tri-density magnetic tape subsystem is a backup storage system for use with the Gould Concept/32 computer systems. The complete magnetic tape system consists of a high-speed tape processor (HSTP), a master tape unit, and up to three slave magnetic tape units. The high-speed tape processor (Gould model 8050) is a high performance tape controller for up to four high density tape drive units. The tape units are

interfaced to the HSTP through a formatter control unit which is included in the master magnetic tape unit. The magnetic tape units support 125 tri-density tape drives with 800/1600/6250 bpi recording in NRZI/PE/GCR format. This tape format is compatible with the IBM and ANSI tape format standards.

a. Model: 8214, master tape unit
8224, slave tape drive
8050, high-speed tape processor

b. Manufacturer: Gould, Inc.
Computer Systems Division
6901 W. Sunrise Blvd.
Ft. Lauderdale, FL 33313-4499
(Phone) (305) 587-2900

c. Pricing: Model 8050, $16,000.00
8224, $22,000.00
8214, $50,000.00

d. Operation: The high-speed tape controller is capable of controlling up to four tape drives and also features an overlapped rewind capability. It facilitates I/O processing independently and concurrently with the CPU.

The high-speed tape processor also includes the following features:

16-Mbyte addressing - The tape processor may directly address up to 16 Mbytes of memory.

Command chaining - Multiple commands may be chained and executed automatically for increased CPU availability.

Data chaining - Allows a contiguous block of read/write data on tape to be transferred to noncontiguous memory and vice versa.

Supports the 125 ips tri-density 800/1600/6250 bpi tape drives recording in NRZI/PE/GCR format.

The master magnetic tape unit contains the formatter control unit that interfaces the tape drives to the HSTP and contains error detection and correction circuitry. The magnetic tape units support 125 ips tri-density tape drives with 800/1600/6250 bpi recording in NRZI/PE/GCR format. At a recording density of 6250 bpi, data are transferred at a rate of 780 kbytes/sec. A single reel is capable of storing

over 145 Mbytes of data thus providing easy and fast backup facilities.

e. Prerequisites: Requires a Gould Concept/32 computer system.

f. Input specifications

Number of tracks:	9
Recording density:	800/1600/6250 bpi
Data transfer rate:	
800 bpi (NRZI)	100 kbytes/sec
1600 bpi (PE)	2009 kbytes/sec
6250 bpi (GCR)	781,250 kbytes/sec

Access times:	Write	Read
GCR	1.2 msec	1.4 msec
PE	1.2 msec	2.0 msec
NRZI	2.0 msec	2.8 msec

g. Output specifications: Same as input specifications.

h. Interfacing: The 125-ips tri-density magnetic tape system is designed to interface to the Gould Concept/32 computer system via the high-speed tape processor (Gould model 8050).

i. Power requirements and recommendations:

ELECTRICAL

Voltage:	120 VAC or 240 VAC
Frequency:	50 or 60 Hz
Power:	20 A (master) @ +120 VAC, 60 Hz
	15 A (slave) @ +120 VAC, 60 Hz
	10 A (master) @ +220 VAC, 50 Hz
	7.5 A (slave) @ +220 VAC, 50 Hz

j. Compatible equipment: The 125-ips tri-density magnetic tape subsystem is designed to work with the Gould Concept/32 computer system (see para. IV-2-7).

k. Software available: Gould supports the 125-ips magnetic tape subsystem in its system software for the Concept/32 computer system.

l. Environmental conditions:

Temperature:

Operating	60 to 90 °F (16 to 31 °C)
Storage/transport	-40 to 158 °F (-40 to 70 °C)

Humidity:

Operating	20 to 80% RH (noncondensing)
Storage/transport	10 to 90% RH (noncondensing)

Altitude:

Low altitude	0 to 1100 ft (0 to 335m)
High altitude	1100 to 6000 ft (335 to 1829m)
	6000 to 8500 ft (1829 to 2587m)

m. Application information: The 125-ips tri-density magnetic tape subsystem can provide the Gould Concept/32 computer systems with a back-up storage capability. Up to four tape drives capable of storing 145 Mbytes a piece may be used as storage facilities with this system.

n. Comments: None.

IV-6-3. Type and description: **Tape system, magnetic, Hewlett-Packard 7970E.** The Hewlett-Packard model 7970E magnetic tape system is a reliable back-up storage system for use with Hewlett-Packard midrange computer systems which have up to 400-500 Mbytes of on-line storage. It is used for data exchange between computers and for transaction logging to protect real-time database updates between system backups. The system is available in either a lowboy cabinet or without a cabinet for rack mounting. An upright cabinet is also available.

a. Model: HP 7970E magnetic tape system

b. Manufacturer: Hewlett-Packard
1820 Embarcadero Road
Palo Alto, CA 94303
(Phone) (213) 877-1282

c. Pricing: $10,610.00

d. Operation: The HP 7970E operates in the start/stop mode at 45 ips read/write speed and uses tension arms as physical tape buffers. Its 1600 characters/in. (cpi) capacity allows for a formatted capacity of approximately 40 Mbytes per 2400 ft of tape. The tape drive is available with either a parallel or an HP-IB

interface which makes it useful for Hewlett-Packard computers not supporting HP-IB peripherals.

e. Prerequisites: An HP midrange computer system.

f. Input specifications:
Read/Write speed: 45 ips
Read/Write density: 1600 cpi

g. Output specifications: Same as input specifications.

h. Interfacing: The model HP 7970E is available with an HP-IB interface or parallel interface which allows it to work with Hewlett-Packard midrange computer systems using either the HP-IB data format or other types of parallel I/O.

i. Power requirements and recommendations:
Voltage: 110 VAC
Frequency: 60 Hz

j. Compatible equipment: Below is a list of HP computers with which the system operates.

HP 100, series A/L, M/E/F
HP 3000, series III, series 30,33,39,40/42,44/48, 64/68
HP 9835, 9845
HP 9000 series 200 HP-UX, 500

k. Software available: Hewlett-Packard supports the HP 7970E in its standard software packages available for the compatible computer systems.

l. Environmental conditions: This unit is designed to operate in a computer room environment.

m. Application information: The HP 7970E is a magnetic tape system that provides midrange Hewlett-Packard computer systems with a back-up storage capability of approximately 40 Mbytes of data per 2400 ft of tape. It may also be used for data exchange between computers or for real-time database updates between system backups.

n. Comments: None.

IV-6-4. Type and description: **Magnetic tape system, HP 82161A digital cassette drive.** The Hewlett-Packard model 82161A digital cassette drive is a back-up storage system for use with HP portable computers. When equipped to provide Hewlett-Packard interface loop (HP-IL) compatibility, the HP 41, HP 71, and the HP 75 portable computers may use a multiple of HP 82161A tape systems to facilitate mass storage needs. Each HP 82161A digital cassette drive uses a digital minicassette, which is capable of storing up to 128 kbytes of information.

a. Model: HP 82161A

b. Manufacturer: Hewlett-Packard
1820 Embarcadero Road
Palo Alto, CA 94303
(Phone) (213) 877-1282

c. Pricing: $450.00

d. Operation: The HP 82161A features a dual track minicassette drive capable of storing 128 kbytes of information at a density of 850 bpi. The unit communicates and is controlled via the HP-IL. This requires the controlling computer to have an HP-IL interface. All tape movement is under microprocessor control, and buffer space provides temporary storage of directory information to minimize access time and tape motion. The cassette drive can locate files when under program control and features a standby mode which enables the HP-IL controlling device to turn the drive on or off remotely. Rewind time is under 30 seconds and read/write operations are executed at 9 ips with search speed at 30 ips.

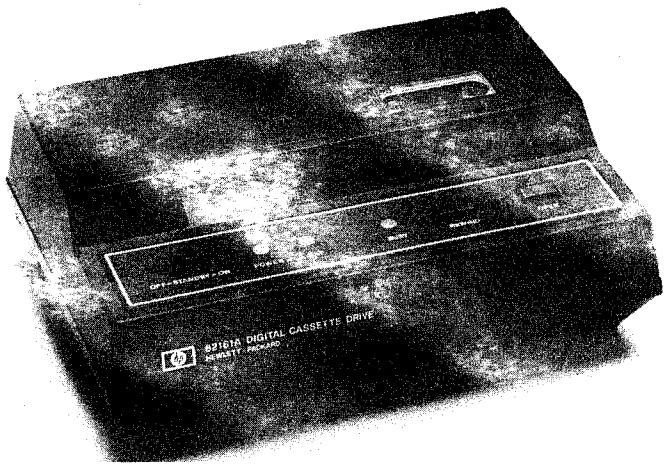

HP 82161A DIGITAL CASSETTE DRIVE (COURTESY OF HEWLETT-PACKARD)

e. Prerequisites: An HP 41, HP 71, or HP 75 portable computer equipped to interface to HP-IL devices.

f. Input specifications:

Data Format	
Number of tracks:	2
Density:	850 bits/inch
Format:	256 bytes/record (8 bits/byte)
Formatted capacity:	512 records (131,072 bytes)

g. Output specifications: Same as input specifications.

h. Interfacing: The HP 82161A is designed to interface to HP portable computers via the Hewlett-Packard interface loop (HP-IL).

i. Power requirements and recommendations:
Batteries: A 4-cell, 4.4 to 6-volt, quick charge, Nickel Cadmium battery pack

j. Compatible equipment: HP 41, HP 71, and HP 75 portable computers.

k. Software available: HP supports the HP 82161A cassette drive in its system software for the HP 41, HP 71, and HP 75 portable computers.

l. Environmental conditions:

Operating temperature:	50 to 104 deg F
Charging temperature:	59 to 104 deg F
Storage temperature:	-40 to 167 deg F (without tape)

m. Application information: The HP 82161A digital cassette drive is designed to facilitate mass storage needs for the HP 41, HP 71, and HP 75 portable computers.

n. Comments: None.

IV-6-5. **Type and description: Magnetic tape system, DSP-3.** The microprocessor-based Kinemetrics DSP-3 digital playback system interfaces between a computer and digital cassette tapes encoded by Kinemetrics DSA-1, DSA-3, and PDR-1 strong motion accelerographs. Its 56-kbyte buffer memory allows the high density acceleration data to be played into the computer at rates consistent with the computer input capability. The system has two digital outputs, serial EIA RS-232-C and 8-bit parallel, both of which may be set for either binary or ASCII format. Analog outputs for the three data channels and the time code are available on the front panel. Thus, the operator may monitor all three channels simultaneously and select events to be transferred to the computer.

a. Model: DSP-3

b. Manufacturer: Kinemetrics, Inc.
Two Twenty-Two Vista Avenue
Pasadena, CA 91107
(Phone) (818) 795-2220

c. Pricing: $9,300.00

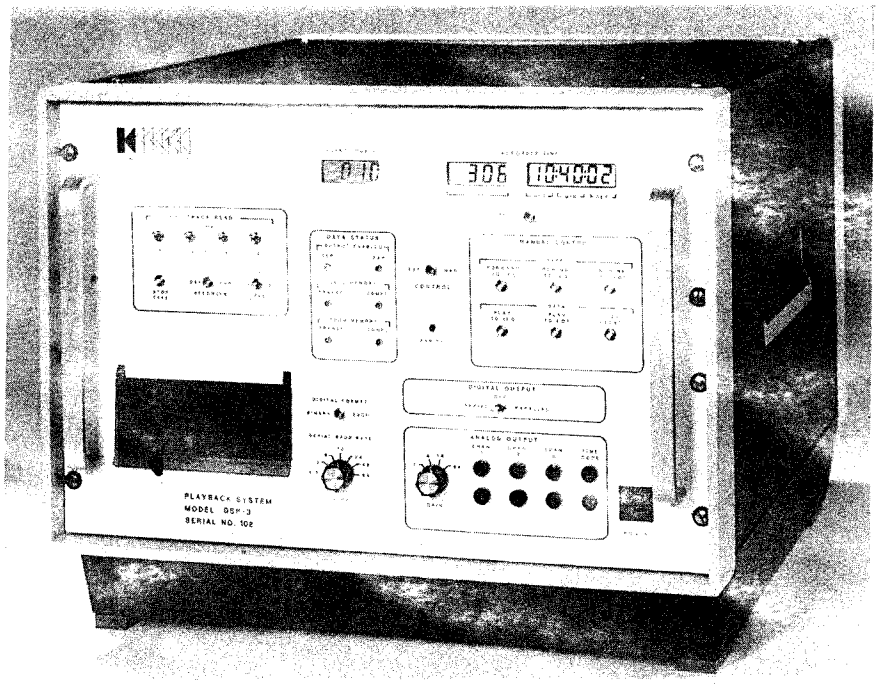

DSP-3 PLAYBACK SYSTEM (PHOTO COURTESY OF KINEMETRICS, INC.)

d. Operation: The model DSP-3 can run under either manual or computer control. It has an EIA RS-232-C and an 8-bit parallel digital output that may use either binary or ASCII format. The serial baud rate is selectable from 150 to 9600. The 8-bit parallel output is provided for rapid data dumps from the DSP-3 memory to the computer. The tape contains three channels of data and a time code. The analog outputs for all three channels and the time code are available on the front panel. Under manual control, an external strip-chart recorder may be used to monitor and select records to be transferred to the computer. Gain setting may be selected at 1, 4, 16, or 64. The front panel indicators show the status and location of data. Numerical displays show event time and event number.

e. Prerequisites: Data tapes are recorded by either the Kinemetrics models DSA-1, DSA-3, or PDR-1 digital cassette recorders (see para. II-12-1 herein).

f. Input specifications: Magnetic tape digital cassette, 0.15 inch X 300 ft.

g. Output specifications: Three analog channels plus time code channels with selectable gains of 1, 4, 16, or 64. Serial digital: This system is EIA RS-232-C-compatible, baud are rates selectable from 150 to 9600. Parallel digital: 8-bit for interface with a GPIB available for some minicomputers.

h. Interfacing: The model DSP-3 may be interfaced to any minicomputer or microcomputer having an EIA RS-232-C data port. The DSP-3 also provides an 8-bit parallel digital output to allow rapid transfer of data. This output may be interfaced to minicomputers that offer a GPIB. The user either programs this board to accept the transfer protocol of the DSP-3 or room is allotted to the user to construct his own interface circuitry on the board.

i. Power requirements and recommendations:
Standard: 110 VAC at 60 Hz
Optional: 220 VAC at 50 Hz

j. Compatible equipment: The Kinemetrics model DSA-1, DSA-3, or PDP-3 digital tape recorder used to record the data tapes. Also, any microcomputer with an RS-232-C data link or a GPIB may be used to store and analyze the data.

k. Software available: Not available.

l. Environmental conditions:
Operating temperature: 30 to 130 ^{o}F

m. Application information: The DSP-3 is used to transfer data collected by model DSA-1, DSA-3, or PDR-3 seismic data acquisition systems to a minicomputer or microcomputer for storage and analysis.

n. Comments: None.

IV-6-6. Type and description: **Magnetic tape system, MODCOMP model 4195.** The MODCOMP model 4195 magnetic tape system is a back-up storage system for use with the MODCOMP single board Classic minicomputer. The complete system consists of a magnetic tape unit, an embedded tape formatter, a device cable, a cross-cooled cabinet, and a controller. Up to three slave tape units may be added to the master tape unit for additional storage

capacity. Each tape unit holds over 45 Mbytes of data for every 2400-ft reel of magnetic tape.

a. Model: 4195-11, master tape drive
4195-2, slave tape drive

b. Manufacturer: Modular Computer Systems, Inc.
P.O. Box 6099
1650 West McNab Road
Ft. Lauderdale, FL 33310
(Phone) (305) 974-1380

c. Pricing: Model 4195-11, $18,500.00
Model 4195-2, $10,200.00

d. Operation: The MODCOMP 4195-11 is the master tape drive in this system and contains an embedded formatter. The built-in formatter interfaces the master and any slave tape drives to the controller and CPU. The tape units are 9-track machines that run at a speed of 75 ips. They may record at either an 800-byte/in. or a 1600-byte/in. density and use either a NRZI or a phase-encoded format. These tape formats are compatible with the IBM and ANSI tape format standards. Recording at the 1600-bytes/in. density, each tape unit can store over 45 Mbytes of data on a 2400-ft reel of tape at a rate of 120 kbytes/sec. The magnetic tape controller included with this system is a Classic style plug-in board that requires one slot in any MODCOMP Classic style enclosure such as the model 4911 or model 4912. The maximum distance between this controller and the master tape drive must not exceed 12 feet due to cable requirements.

e. Prerequisites: A MODCOMP single board Classic minicomputer and a MODCOMP Classic style enclosure such as the model 4911 or model 4912. (Refer to para. IV-2-20 herein.)

f. Input specifications:

Tape Unit	No. of tracks:	9
	Tape speed:	75 ips
	Record density:	800 or 1600 bytes/inch
	Tape format:	NRZI or phase encoded

g. Output specifications: Same as input specifications.

h. Interfacing: The master tape unit and the slave tape unit are designed to interface to a MODCOMP single board Classic minicomputer via a controller and an embedded formatter included with the system.

i. Power requirements and recommendations: 120 VAC at 60 Hz

j. Compatible equipment: The MODCOMP single board Classic minicomputer and the model 4911-2 tape drives. (Refer to para. IV-2-20 herein.)

k. Software available: MODCOMP supports the model 4915 magnetic tape system in its system software for the MODCOMP single board minicomputer.

l. Environmental conditions: This equipment was designed to operate in a computer room environment.

m. Application information: The MODCOMP 4195 magnetic tape system can provide the MODCOMP single board minicomputer with an extensive back-up storage capability. Up to four tape drives capable of storing over 45 Mbytes each may be used as storage facilities with this system.

n. Comments: None

IV-6-7. Type and description: **Magnetic tape system, Perkin-Elmer embedded formatter.** The Perkin-Elmer embedded formatter magnetic tape system, model M46-750, is designed to provide storage facilities for the Perkin-Elmer family of 32-bit minicomputers. It provides medium range, bulk storage capabilities for data backup and/or retention storage. This system is available as a stand-alone unit, or it may be equipped with an embedded formatter, eliminating the need for a stand-alone formatter. This tape system incorporates a controller capable of supporting from one to four tape transports. The model M46-750 runs at a speed of 75 in./sec and has a byte density of 800 bytes/in. This allows a single transport to store more than 20 Mbytes of data per tape.

a. Model: M46-750

b. Manufacturer: Concurrent Computer Corporation
A Perkin-Elmer Company
2 Crescent Place
Oceanport, NJ 07757
(Phone) (201) 870-4712

c. Pricing: $10,500.00

d. Operation: The embedded formatter is used as an intermediary between the tape transport and the controller. The formatter contains all the logic for generation of preamble, postamble, phase-encoded data, file mark patterns, and recovery of read data to include error and file mark detection and error correction. The magnetic tape controller may interface up to four read-after-write magnetic tape transports and contains the logic to provide error detection and status condition. Various hardware functions include interrupt, read, write, rewind, skip file, write mark file, and clear. These functions are under program control. Error status monitoring is provided for conditions such as write overflow, read error during write operation, cyclic redundancy check, single channel dropout, and data parity errors. Transport condition status is provided for file mark sense, load point, tape not in motion, end of record, and device unavailable.

e. Prerequisites: A Perkin-Elmer 32-bit minicomputer.

f. Input specifications:

Features	75ips
Bits per inch	800
Recording mode	NRZI
Transfer rate	60,000 bytes/sec.
DMA capability	32-bit
Number of tracks	9
Transport read/write speed	75 ips
Transport rewind speed	200 ips
Transport start/stop time	5.3 msec
Inter-record gap	19 mm (.75 in.)
Recording head	Dual gap
Error rate	2×10^8 bits trans.
Type of reel	Hub, 267 mm
Tape capacity	732 m, l 12.7 mm, w 1.5 mil thickness

g. Output specifications: Same as input specifications.

h. Interfacing: The model M46-750 comes with a controller that interfaces from a Perkin-Elmer 32-bit minicomputer.

i. Power requirements and recommendations:

Tape transport:	Voltage	- 115 VAC/230 VAC
	Frequency	- 47 to 63 Hz
	Consumption	- 3 amps/1.5 amps
Formatter:	Voltage	- 115 VAC/230 VAC
	Frequency	- 47 to 63 Hz
	Consumption	- 3 amps/1.5 amps
Controller:	Voltage	- +5 VDC
	Consumption	- 1.8 amps

j. Compatible equipment: Any Perkin-Elmer 32-bit minicomputer.

k. Software available: The model M46-750 is fully supported by the Perkin-Elmer OS/32 operating system.

l. Environmental conditions: Operating temperature: 15.1 to 18.9 °C. Humidity: 20 to 80% RH noncondensing. Altitude: 0 to 7000 ft (operating).

m. Application information: The Perkin-Elmer model M46-750 may be used with the entire Perkin-Elmer family of 32-bit minicomputers to provide a medium range, bulk-storage facility for data backup and/or retention storage.

n. Comments: None.

IV-6-8. Type and description: Inclinometer, recorder-processor-printer, model 50368 manufactured by Slope Indicator Co. (see para. II-7-3).

IV-6-9. Type and description: Tape deck, seismic playback.

a. Model: DP-250/260

b. Manufacturer: Sprengnether Instruments, Inc.
4567 Swan Avenue
St. Louis, MO 63110
(Phone) (314) 535-1682

c. Pricing: Model 250, $9,900.00; model 260, $11,200.00

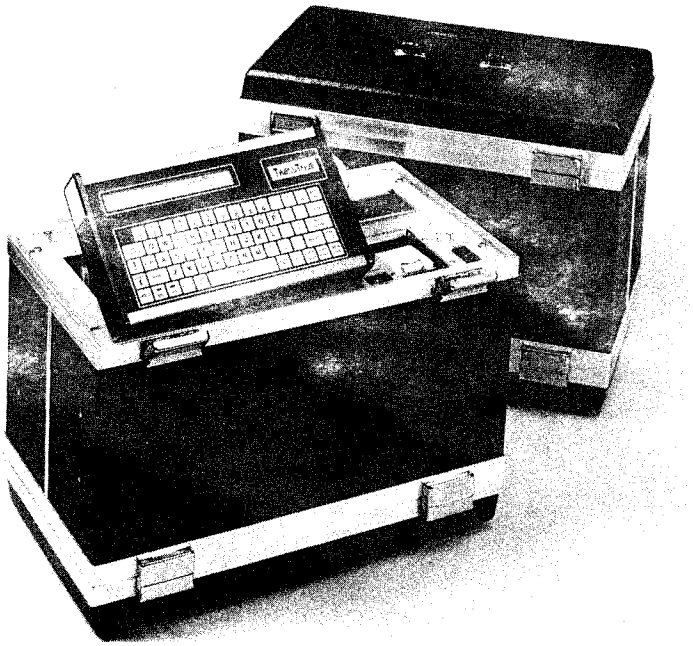

DP-260 SEISMIC PLAYBACK (PHOTO COURTESY OF SPRENGNETHER INST.)

d. Operation: Commands are entered through the front terminal. Both units provide analog and digital playback of recorded data and search for specific events. Playback control is via the terminal. Commands include: GAIN, TRACK, REWIND, REMOTE, CHART, HEADER, PLAY, EVNO (event), HELP, SKIP, TERM, and STEST (self-test).

e. Prerequisites: DR-200 seismic recorder (see para. II-12-4).

f. Input specifications: 300- or 450-ft. tape. 4-track, 1638 BPI phase-encoded, 4096-byte block length. DR-200/210 tape format.

g. Output specifications:

Voltage: ±5 V full-scale
Current: ±5 mA max
Impedance: 0.05 ohm
Resolution: 12 bits
Gain ranging: 4, operator-selectable gain ranges
Linearity: ±1/2 LSB, output rate: 100 Hz/channel

h. Interfacing: EIA RS-232-C port for strip chart or oscillographic recorder.

i. Power requirements and recommendations:

DP-250: 90-130 VAC or 180-260 VAC
DP-260: Internal power supplied by storage battery. Charger requires 115 or 230 VAC 50/60 Hz, 100 w.

j. Compatible equipment: DR 200 seismic recorder.

k. Software available: Not applicable.

l. Environmental conditions: Model 250 Lab use. 260 NEMA 4 enclosure. Temperature - 15 to 45 °C. Relative humidity - 90% noncondensing.

m. Application information: Playback of cassette tapes recorded on the DR200 seismic recorder.

n. Comments: Uses DR 200 as recorder.

IV-6-10. Type and description: **Playback/plotter, accelerograph.** This unit is used to playback the seismic data acquisition tapes recorded by the DCA 333 and other Terra Technology accelerographs. The digital data are decoded and all timing and identification codes are printed, as well as the recorded gain and auxiliary data.

a. Model: SMR-104

b. Manufacturer: Terra Technology, Corporation
3860 148th Ave., N.E.
Redmond, WA 98052
(Phone) (206) 883-7300

c. Pricing: $7,100.00; battery charger is $205.00

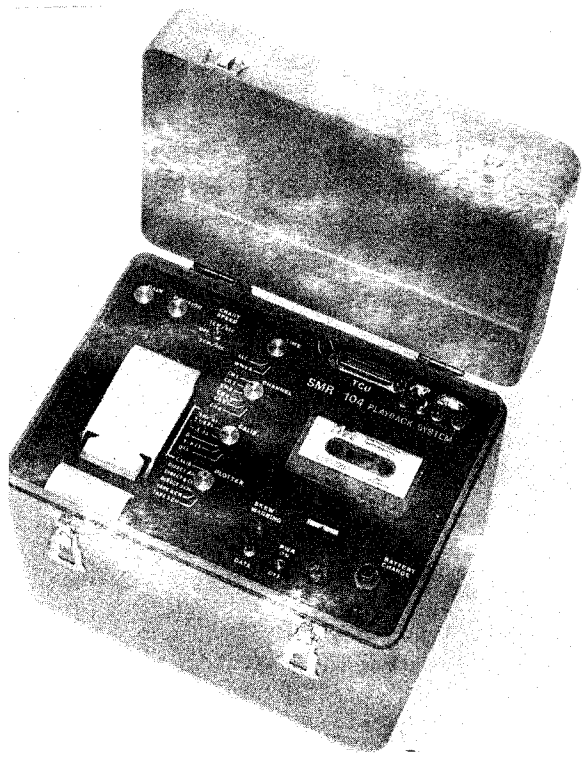

SMR-104 PLAYBACK/PLOTTER (PHOTO COURTESY OF TERRA TECHNOLOGY)

d. Operation: The portable playback/plotter is battery-powered and provides convenient field testing, calibration, and playback of DCA/DCS seismic data acquisition systems. Continuous single channel data are plotted on heat sensitive strip chart paper having 50-mm channel width. A built-in self test source provides static and dynamic input test signals to the accelerometer sensors, allowing total system performance to be monitored, tested, or adjusted. An alphanumeric identification sequence is edge-printed simultaneously with the analog plotting. Timing marks are also edge-printed on the opposite margin. These marks may be either NBS WWVB or one-second marks.

e. Prerequisites: Requires the Terra Technology accelerograph formatted tapes and computer interface for more detailed data reduction. Refer to para. II-12-5 for more information.

f. Input specifications: Two-track NRZI (complementary) 4800 bits/sec. Tape speed 3-3/4 ips. servo speed control.

g. Output specifications: Plotter/printer: thermal, 50 mm wide.
Format of output: date, hours, minutes, seconds, auxiliary data (user-defined), gain, channel 1-3, unit serial number, event counter.
Computer interface: available in 16-bit parallel (general purpose) and EIA RS-232-C (9600 baud).

h. Interfacing: EIA RS-232-C (9600 baud) and 16-bit parallel (general purpose).

i. Power requirements and recommendations: Rechargeable battery 12 VDC, 2.6 amp/hour, 2 required. Sealed gel cell; and battery charger: Terra Technology BC-10A.

j. Compatible equipment: Not applicable.

k. Software available: Not applicable.

l. Environmental conditions:
Housing: portable box
13 in. x 9 in. x 12 in.
Operating temperature: 0 to 50 °C
Humidity: 0-90% RH noncondensing

m. Application information: The playback/plotter may be used with any of the Terra Technology digital cassette accelerographs.

n. Comments: The unit is ideal for collecting seismic data and for evaluating the data in the field or at a computer for further data reduction.

Terminals/Display Units

IV-7-1. **Type and description: Display, video, intelligent terminal.** The Ambassador XL terminal is an intelligent video display terminal that is used for general purpose ASCII-based asynchronous data entry and retrieval applications. It also features a 60-line by 80-character screen and provides the user with a full-page editing capability. It has a large 15 in. nonglare screen connected to a detached, 111-key, low profile keyboard with numeric and function pads. All keys are programmable to 31 levels and are programmable with any ASCII string. They also have local only, send only, and repeat attributes. The terminal features a multiple page or window capability, and a split screen capability with user-defined, bidirectional scrolling regions.

a. Model: Ambassador XL

b. Manufacturer: Ann Arbour Terminals, Inc.
6175 Jackson Road
Ann Arbour, MI 48103
(Phone) (313) 663-8000

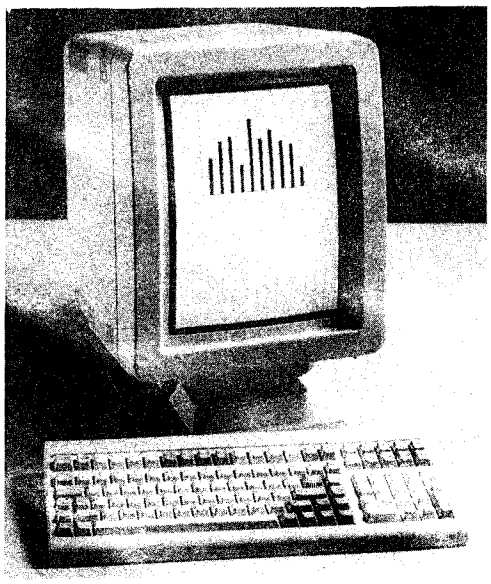

AMBASSADOR XL (PHOTO COURTESY OF ANN ARBOUR TERMINALS)

c. Pricing: $1,595.00 each (1-3), Less 5% (4-6); Less 10% (7 or more)

d. Operation: The Ambassador XL terminal provides the user with full-page text editing capability. The user may erase a character, area, field, line, or the whole display. He may insert or delete a character or a line and operate in an insertion mode or replacement mode. The terminal has a full complement of tab and cursor commands. Among the display commands are: setting the graphic rendition to blink, bold, reverse, or underline; setting the display or memory format for multiple page or window operation; setting characters to ASCII or line drawing; and controlling the zoom and scroll operations. Other commands include the send and print commands, repeat, and reset; keyboard lock or unlock, and others. The set-up menus for the terminal are stored in a nonvolatile memory so that they need not be reprogrammed in case of power loss. The set-up menus guide the user in the selection of operator convenience modes, communication parameters, print parameters, and other modes. Simple single keying exits include exits to save settings, local mode, single line data monitor, full screen data monitor, and diagnostics.

e. Prerequisites: Computer with an EIA RS-232-C data port.

f. Input specifications: Not applicable.

g. Output specifications:
Display: 18 - 60 lines by 80 characters
Local display memory: 60 lines
Screen color: green

h. Interfacing: EIA RS-232-C asynchronous ASCII serial data format.

i. Power requirements and recommendations:
Voltage: 115 VAC, +15%
Frequency: 50/60 Hz
Power consumption: 40 w

j. Compatible equipment: The Ambassador XL terminal may be used with any computer that uses the EIA RS-232-C data format. However, this terminal features DEC software compatibility.

k. Software available: Not applicable.

l. Environmental conditions:

Temperature (operating):	10 to 40 °C
Temperature (storage):	-40 to 55 °C
Altitude (operating):	0 to 10,000 ft
Humidity:	10 to 90% RH noncondensing

m. Application information: This terminal is an intelligent terminal that may be used for general communication with a computer. It also supplies the user with a full-page editing capability and a number of other automatic features.

n. Comments: None.

IV-7-2. **Type and description: Terminals, DEC VT100.** The DEC VT100 family of desktop video terminals are standard conversational ASCII terminals. All four models, which include the VT100, VT101, VT102, and VT131, are equipped with a sculptured, detachable keyboard connected to the video display by a 6ft coiled cord. The keyboard allows users to set the terminal functions by setting tab stops, reversing the video image, or changing the cursor from underline to block. The terminals communicate via the RS-232-C data protocol with selectable baud rates from 50 baud to 19.2 kbaud. These terminals may use the ANSI (American National Standard Institute) command set or the VT 52 command set allowing these terminals to operate with DEC computer systems as well as some other computer systems.

a. Model: VT100, VT101, VT102, and VT131

b. Manufacturer: Digital Equipment Corporation
One Iron Way
P.O. Box 1002
Marlboro, MA 01752
(Phone) (617) 467-4198

c. Pricing: Model VT100, $1,945.00
VT101, $1,350.00
VT102, $1,595.00
VT131, $1,695.00

d. Operation: The VT100 family of terminals is used for general purpose, ASCII-based, asynchronous data entry and retrieval applications. The VT101, VT102, and the VT131 feature full duplex, local-echo operation, while the VT100 must have the information sent to the computer and echoed back to be displayed. A printer port is built into the VT102 and the VT131 for a hard copy output and advanced video options. These advanced video features of the VT102 and VT131 allow these terminals to display characters in any combination of blinking, bold, underscore, or reverse video. In addition, the VT131 has local editing and block mode transmission capabilities. All terminals have a double height/double width character capability, a split screen capability, standard numeric and function key pads, a nonvolatile set-up memory, and cursor control keys. Vertical scrolling is bidirectional and may be performed in either a smooth or jump mode.

e. Prerequisites: A DEC or compatible computer system with EIA/CCITT serial-line interface or equivalent.

f. Input specifications: Not applicable.

g. Output specifications:

Baud rate:	50 baud to 19.2 kbaud
Format:	24 line x 80 characters
Characters:	7 x 9 dot matrix with descenders
Character set:	94 displayable-character ASCII set and 32-character Special line-drawing graphics set

h. Interfacing: EIA RS-232-C serial data format with selectable baud rate from 50 baud to 19.2 kbaud.

i. Power requirements and recommendations: 120 VAC, 60 Hz.

j. Compatible equipment: DEC computer systems such as the MICROVAX and the PDP 11/23 plus. (Refer to paras. IV-2-5 and IV-2-6)

k. Software available: The VT100 family of terminals is supported by DEC system software.

l. Environmental conditions: The VT100 family of terminals is designed to operate in a computer room environment.

m. Application information: The VT100 family of terminals is used for general, ASCII-based, asynchronous communication with DEC or compatible computer systems.

n. Comments: None.

IV-7-3. **Type and description: Terminal, video, conversational.** The ADM-11 is an ergonomically designed conversational video display terminal that is used for general purpose, ASCII-based and asynchronous data entry and retrieval applications. It features a bright, sharp, nonglare display and hooded bezel that minimizes reflections from overhead lighting. The tilt-and-swivel monitor may be easily adjusted to the user's desired viewing angle. The keyboard is a detached, low profile, DIN standard that is connected to the monitor with a six ft coiled cord. The sculptured keys arranged in the popular Selectric layout and the cursor keys are arranged in a "cross" pattern to simplify their operation. A separate calculator format numeric keypad allows fast data entry of long numeric strings.

a. Model: ADM-11

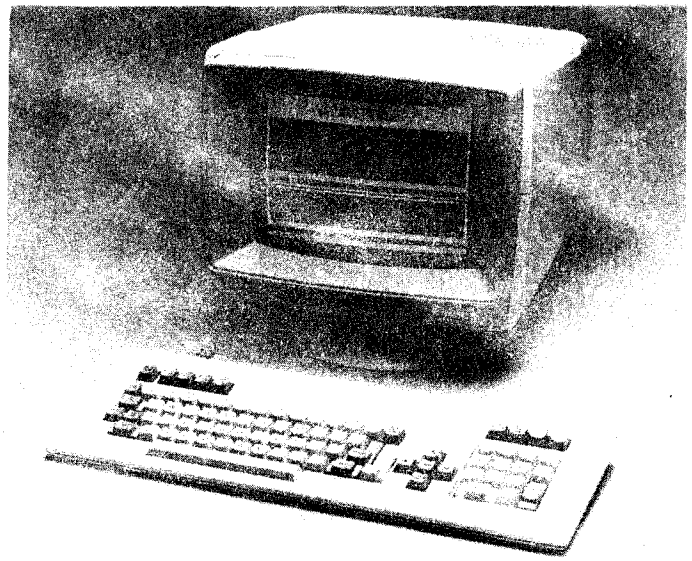

ADM-11 TERMINAL (PHOTO COURTESY OF LIER-SIEGLER, INC.)

b. Manufacturer: Lier-Siegler, Inc.
Data Products Division
901 E. Pall Road
Anaheim, CA 92805
Phone: (714) 778-3500

c. Pricing: $695.00

d. Operation: The ADM-11 terminal conversational operation can handle computer transmissions up to 19.2 kbaud without handshaking. Its screen attributes include nonembedded reduced intensity plus embedded blink, blank, and reverse video. It has a line and page-erase feature and may build forms and charts giving it a business graphics capability. It has four function keys that are shiftable to perform eight functions to reduce keyboard work. There are three shiftable edit keys and a break key that are programmable for seven functions. Labels showing what the functions do may be displayed on the 25th message line. The mode of communication may be set to conversational, half- or full-duplex, or local. Handshaking is also selectable and may be X-On/X-Off, DTR, or none. Communication with the host is done through an EIA RS-232-C, serial asynchronous ASCII data port with any popular baud rate from 300 baud to 19.2 kbaud. The ADM-11 also has a nonvolatile set-up mode which allows features such as key-click, communication characteristics, and replacement characters to be selectable from the keyboard or the host and saved when power is off. A nonvolatile option for the function keys is available which saves time and effort in reprogramming keys when power is lost. Two other available options are communication interfaces for EIA RS-422 and current loop.

e. Prerequisites: Computer with an EIA RS-232-C, RS-422, or current loop data port.

f. Input specifications: Not applicable.

g. Output specifications:

CRT screen: 12 in. (30.5 cm) or optional 14 in. (35.6 cm) diagonal; green or amber phosphor with nonglare surface.

CRT console: tilt and swivel mechanism; 360° swivel capability; tilt, 5° forward to 15° back of vertical. Removable base.

Horizontal refresh rate: 17.7 kHz.

Vertical refresh rate: 50 or 60 Hz selectable, depending on line frequency.

Display format: One page of 1920 characters, or 80 characters per line x 24 lines, plus a 25th line for terminal status, host messages, set-up mode, or function key legends.

Character matrix: 7 x 10 dot matrix with descenders in an 8 x 11 matrix field.

h. Interfacing: The primary interface port is an EIA RS-232-C serial asynchronous ASCII data port. EIA RS-422 and current loop interfaces are optionally available.

i. Power requirements and recommendations:

	Standard	Optional
Voltage:	115 VAC +10%	230 VAC +10%
Frequency:	60 Hz	50 Hz
Power consumption:	50 w	50 w

j. Compatible equipment: The ADM-11 may be used with any computer that uses an EIA RS-232-C, RS-422, or current loop data format.

k. Software available: None.

l. Environmental conditions:

Temperature: 5 to 40 °C

Humidity: 5 to 95% RH, (noncondensing)

Physical specifications:
13.5 in. W x 12.6 in. H x 14.5 in. Deep
Base is 11 in.

Keyboard dimensions:
20.25 in. W x 1.2 in. H x 7 in. D
Weight: 25.3 lb

m. Application information: The Lier-Siegler ADM-11 terminal is a conversational terminal used for general purpose, ASCII-based asynchronous data entry/retrieval applications. It has a limited editing capability, and performs basic graphics such as charts and graphs.

n. Comments: None.

IV-7-4. **Type and description:** Terminal, video display. The Perkin-Elmer model 6100 is a 12 in. nonglare green or amber CRT terminal with a detached keyboard. It has line drawing graphics capabilities and line and page-erase edit operations. The alphanumeric screen format is 24 lines by 80 characters each with the 25th line for status. The detached, low profile keyboard has a typewriter layout, 14-key numeric keypad, and four function keys. The model 6100 also has a standard printer port to provide hardcopy capability.

a. Model: 6100

b. Manufacturer: Concurrent Computer Corporation
A Perkin-Elmer Company
2 Crescent Place
Oceanport, NJ 07757
(Phone) (800) 631-2154

c. Pricing: $950.00

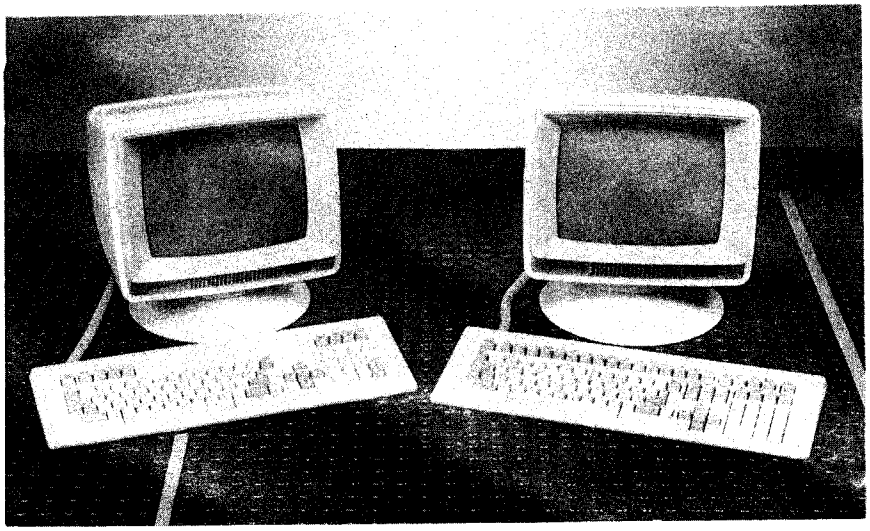

MODEL 6100 TERMINAL (PHOTO COURTESY OF CONCURRENT COMPUTER CORP.)

d. Operation: The user may choose either half- or full-duplex operation with a host computer. The mode of

operation of the communications port with a host computer may be initialized from either the keyboard or the host processor. The host computer can either direct data to the CRT screen or a hardcopy printer connected to the printer port or both, simultaneously. The model 6100 has a 1400-byte input buffer.

e. Prerequisites: A Perkin-Elmer model 650 or 655 thermal page printer is required to provide hardcopy capability.

f. Input specifications: EIA RS-232-C, 300 baud to 19.2 kbaud, full- or half-duplex.

g. Output specifications: Same as input. Also a printer connector provides data to an EIA RS-232-C-compatible printer.

h. Interfacing: EIA RS-232-C standard interface, serial asynchronous ASCII.

i. Power requirements and recommendations: 115 VAC +10%, 50/60 Hz, 70 watts.

j. Compatible equipment: Perkin-Elmer models 7350A and 3200 series central processing units. Models 650 and 655 printers.

k. Software available: The model 6100 is supported by Perkin-Elmer OS/32 operating system.

l. Environmental conditions: Operating temperature: 5 to 40 deg C. Humidity: 5 to 95% RH.

m. Application information: The model 6100 terminal may be used with any host computer. In addition to alphanumerics, it provides line-drawing graphics capability.

n. Comments: Perkin-Elmer also markets a "smart" display terminal (model 6312 - $1,320.00) providing enhanced forms drawing capability and self-test diagnostics.

IV-7-5. Type and description: **Display unit, digital.** A six- digit display unit used to power and read the following Telemac instruments: DISTOFOR, CLINOFOR/CLINOFIX, Fill

Elongameter, Crack Meter, Nivomatic, Remote Levelling Apparatus, Remote Pendulum, Pressure Cells, Ground Anchor Dynamometers.

a. Model: FC 3 DC readout set

b. Manufacturer: Telemac
2 Rue Auguste-Thomas
92 500 Asnieres, France
(marketed by)
Roctest, Inc.
7 Pond Street
Plattsburgh, NY 12901
(Phone) (518) 561-3300

c. Pricing: $3,600.00

d. Operation: The display unit measures the differential frequency produced by the Telemac instruments. These instruments are based on the principle of differential induction variation which controls the differential frequency of a double LC-type oscillatory circuit in a self-compensating configuration.

e. Prerequisites: Telemac measuring instrument.

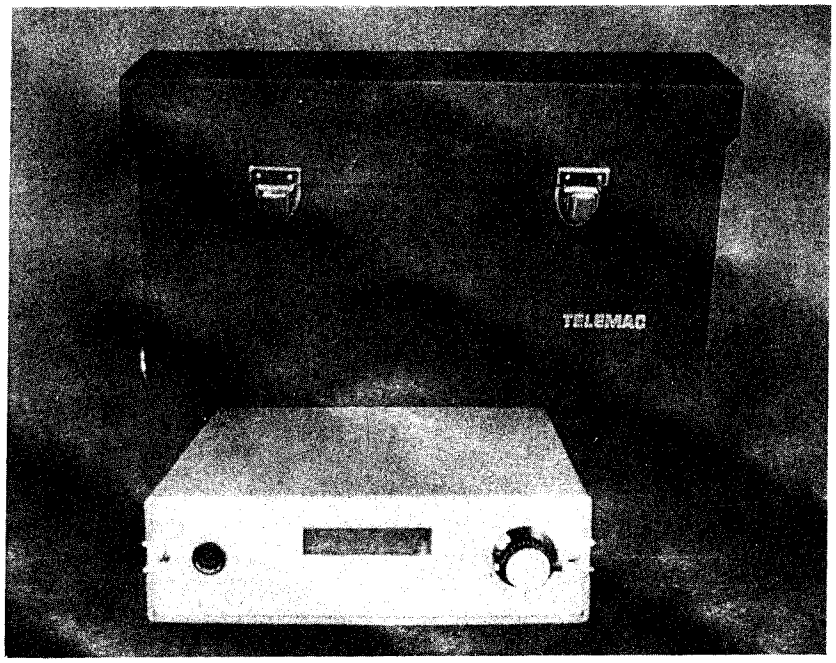

FC 3 DC READOUT SET (PHOTO COURTESY OF TELEMAC)

f. Input specifications: 10 Hz to 1 MHz, sensitivity: 10 mV.

g. Output specifications: 10 Hz to 1 MHz, 6-digit resolution.

h. Interfacing: None.

i. Power requirements and recommendations: 8 X 1.2 V, 1.2-amp-hour rechargeable batteries.

j. Compatible equipment: See paras. II-5-11 and II-8-2.

k. Software available: Not applicable.

l. Environmental conditions: Operating range: 0 to 50 °C.

m. Application information: For use with Telemac instruments.

n. Comments: Incorporates voltage-to-frequency converter for temperature measurements.

IV-7-6. **Type and description: Terminal, alphanumeric display.** The following list of manufacturers of terminals is provided for reference. All terminals listed are RS-232-C interface compatible and support X-on/X-off protocol. However, the manufacturer should be contacted to ensure hardware and software compatibility with a specific computer system.

Ampex Corporation
401 Broadway
Redwood City, CA 94063
(Phone) (415) 367-2700

Model Ampex 210, 14 in. CRT $470.00

Applied Digital Data Systems
100 Marcus Blvd.
Hauppauge, NY 11788
(Phone) (516) 231-5400

Model Viewpoint, 12 in. CRT $550.00
Model Viewpoint/color, 13 in. CRT $1,300.00

Beehive International
4910 Amelia Earhart Dr.
Salt Lake City, UT 84116
(Phone) (801) 355-6000

Model ATL-004, 14 in. CRT $1,000.00

DTI, Inc.
30 Uxbridge Rd.
Mendon, MA 01756
(Phone) (617) 481-3700

Model 1510 Plus, 12 in. CRT $1,000.00
Model Proterm 80, 12 in. CRT $1,000.00

Epic Computer Products, Inc.
18381 Bandilier Circle
Fountain Valley, CA 92708
(Phone) (714) 641-8194

Model Epic 14E, 14 in. CRT $1,000.00

Falco Data Products
1286 Lawrence Station Rd.
Sunnyvale, CA 94089
(Phone) (408) 745-7123

Model Fame 2, 15 in. CRT $700.00
Model Falco 2, 12 in. CRT $700.00

General Terminal Corp.
1304A Logan Ave.
Costa Mesa, CA 92626
(Phone) (714) 662-0630

Model SW10, 12 in. CRT, split screen $850.00

Hazeltine Terminals
Div. of Esprit Systems, Inc.
Cuba Hill Rd.
Greenlawn, NY 11740
(Phone) (516) 261-7000

Model Esprit III Color, 12 in. CRT, 8 colors $1,000.00
Model Executive 10/102, 14 in. CRT $1,000.00

Qume Corp.
2350 Qume Dr.
San Jose, CA 95131
(Phone) (408) 942-4000

Model QVT-101, 12 or 14 in. CRT $400.00
Model QVT-108, 14 in. CRT $700.00

Televideo Systems, Inc.
1170 Morse Ave.
Sunnyvale, CA 94086
(Phone) (408) 971-0255

Model 910, 12 in. CRT $650.00

Visual Technology, Inc.
540 Main Street
Tewksbury, MA 01876

Model Visual 60, 12 in. CRT $600.00

Wyse Technology
3751 N. First St.
San Jose, CA 95134
(Phone) (408) 433-1000

Model WY-50, 14 in. CRT $600.00
Model WY-30, 14 in. CRT $400.00

Zenith Data Systems
1000 Milwaukee Ave.
Glenview, IL 60025
(Phone) (312) 391-7000

Model ZT-1, 12 in. CRT $500.00
Model Z-29A, 14 in. CRT $800.00

IV-7-7. **Type and description: Display, video.** The following list of video monitor manufacturers is furnished for reference. All of the products listed are used with personal computers. However, the monitor manufacturer should be contacted for specific compatibility.

AMDEK Corp.
2201G Lively Blvd.
Elk Grove Village, IL 60007
(Phone) (312) 595-6890

Model 300G, Composite green $125.00
Model 300A, Composite amber $135.00
Model 310A, Monochrome amber $160.00

AT&T Information Systems, Inc.
One Speedwell Ave.
Morristown, NJ 07960
(Phone) (800) 922-0354

Model N/A, 12 in. monochrome $300.00
Model N/A, 13 in. color $950.00

Diversified Group
8726 S. Sepulveda, Suite A132
Los Angeles, CA 90045
(Phone) (800) 523-1041

Model 100, Hi-res green, composite, 80-column $80.00
Model 100, Hi-res amber, composite, 80-column $90.00
Model 200, Hi-res green, monochrome, 80-column $90.00
Model 200, Hi-res amber, monochrome, 80-column $100.00

IBM Personal Computer
P.O. Box 1328-W
Boca Raton, FL 33432
(Phone) (800) 243-7054

Model 5153, 13 in., color, 640- X 200-pixels $680.00
Model 5154, 13 in., color, 640- X 350-pixels $850.00
Model 5175, 13 in., color, 690- X 400-pixels $1,300.00
Model 5151, 12 in., green, 350- X 720-pixels $275.00

Princeton Graphic System
601 Ewing St.
Princeton, NJ 08540
(Phone) (800) 221-1490

Model HX-9, 9 in. screen, color $600.00
Model HX-12E, 12 in., color, 640- X 350-pixel $785.00
Model SR-12P, 12 in., color, 640- X 480-pixel $1,000.00
Model MAX-12, 12 in., amber, monochrome $200.00

QUADRAM Corp.
4355 International Blvd.
Norcross, GA 30093
(Phone) (404) 923-6666

Model Amberchrome, 12 in., amber, 720- X 350-pixel $250.00
Model Quadchrome, 12 in., 16-color, 690- X 240-pixel
$700.00
Model Quadchrome II, 14 in., 16-color, 640- X 240-pixel
$600.00

TAXAN Corp.
18005 Cortney Ct.
Industry, CA 91748
(Phone) (818) 810-1291

Model 630, 12 in., color, 640- X 400-pixel $675.00
Model 640, 12 in., RGB color and four monochrome $775.00
Model 121, 12 in., green $190.00
Model 122, 12 in., amber $200.00
Model 440, 12 in., 16-color, 640- X 400-pixel $800.00

Data Entry Devices

IV-8-1. Type and description: **Digitizer,** CalComp. The CalComp model 91480 digitizer is a high resolution graphic input device. The standard model includes two major components: 1) an active surface tablet where digitization occurs, and 2) a transducer which relays the positional data. The transducer may be either a pen stylus or a multibutton cursor. The pen stylus contains a dome switch and replaceable ink or nonink type of ballpoint cartridge. The cursor is available with 4 to 16 programmable function buttons and is equipped with a very fine cross hair lens for point selection. By placing a drawing or sketch on the digitizing surface and tracing over it, the operator may convert graphics into digital information and enter it into a computer. The computer may then store, redraw, or even manipulate the graphic composition of the drawing.

a. Model: 91480

b. Manufacturer: CalComp
2411 W. La Palma Avenue
Anaheim, CA 92801
(Phone) (714) 821-2000

c. Pricing: $3,822.00 for unit
$1,000.00 for necessary interface options

d. Operation: The model 91480 has a tablet size of 48 x 36 in. and is offered in standard, backlighted, and rear project surfaces. Resolution up to 1279 lines /in. and an accuracy of ±0.010 in. are standard with the cursor. Three interfaces for data output to a computer are offered. These include an EIA RS-232-C interface, an EIA RS-449 interface, and an HPIB interface. The transducer may be either a pen stylus or a multibutton cursor. The transducer scans the grid wires and locates a specific point on the tablet surface. It then inputs that point (X-Y coordinate pair) for data analysis. The cursor is offered in 4- or 16-button versions and has a lens with cross hairs that is used to select points to be digitized. The user may develop software to perform a specific function when a particular button is pressed.

Optional firmware is offered to provide more capabilities to the digitizer. One of them, the SMART option, permits the user to perform mathematical transformations to the digitized data. These include translation, rotation, and orthogonality adjustments. Local calculations, such as area and line length, may also be done. The UNIVERSAL FORMATTER option permits the user to construct the output format in which the digitizer presents the coordinate pair data to the computer system. The DATA QUEUE option allows the digitizer to hold up to 600 position pairs when the host computer is momentarily busy and cannot accept them.

e. Prerequisites: A data processing system with one of the following interfaces is best: EIA RS-232-C, EIA RS-449, or GPIB data format. However, the UNIVERSAL FORMATTER option allows the unit to work with almost any system.

f. Input specifications: Not applicable.

g. Output specifications:
Resolution: Up to 1279 lines/in.
Accuracy: ±0.010 in.

h. Interfacing:
Options offered: Single RS-232-C interface
Single RS-449/422 interface
Dual RS-232-C interface
Dual RS-449/422 interface
GPIB interface

The UNIVERSAL FORMATTER option may be used when the digitizer data format must be compatible with an existing system that does not use the standard options.

i. Power requirements and recommendations:
Voltage: 100/180/200/240 V
Frequency: 50/60 Hz

j. Compatible equipment: The model 91480 may be used as a data entry mechanism for any graphic information that can fit on the tablet. This model, however, especially lends itself for computer entry of data produced by three popular strong motion accelerographs. These include the Teledyne-Geotech model RFT-350, the Kinemetrics model SMA-1, and the USC and GS standard accelerograph. Refer to the strong motion accelerometer description in the retrofit section (see para. III-16-1) for operating procedures.

k. Software available: The Kinemetrics Corporation offers software to operate the model 91480. This software is especially suited for use with the three accelerometers cited in the compatible equipment section.

l. Environmental conditions:

Operating temperature:	15 to 40 °C
Storage temperature:	-55 to 75 °C
Humidity:	0 to 95% RH. (noncondensing)

m. Application information: The model 91480 is used as a data entry device for position-related data, such as graphs, charts, or check lists. The Kinemetrics Corporation offers a software package that allows this device to handle the output data produced by several popular strong motion accelerographs.

n. Comments: None.

IV-8-2. **Type and description: Electronic notebook, data entry equipment.** The electronic notebook is an adaptation of the Hewlett-Packard HP 75D hand-held computer that replaces the field notebook and eliminates rekeying. It is actually a software package that is designed for the HP 75D and tailored for manual data collection. Instead of handwriting data on a form, the HP 75D prompts the user for all necessary information. The software is "user friendly" and validates data, so that unreadable data, misplaced decimal points, and incomplete forms are eliminated.

a. Model: Electronic notebook

b. Manufacturer: Geotechnical Engineering and Mining Services, Inc. (GEMS)
190 West Raferty Gardens, Unit 8
Littleton, Colorado 80120
(Phone) (303) 794-1912

c. Pricing: From $3,000.00 to $8,000.00 depending on the amount of software written

d. Operation: The electronic notebook consists of an HP 75D portable computer and a custom software package that is derived from user-supplied information on all the instruments to be inspected. Also, provisions for

adding new instruments are included. When instrument identification is entered, the HP 75D prompts the operator to enter all pertinent information corresponding to the instrument to be monitored. When the inspection is complete, the HP 75D produces a hard copy of the results on the HP Thinkjet printer. An IDBs 8000 instrument database package is optionally offered for this system which allows the information to be digitally transferred into the database for storage and plotting. The data may also be placed on a magnetic card or disk for later analysis by almost any computer through an EIA RS-232-C data port. Universal bar code symbols may be used to identify each instrument. The technician needs only to wave the bar code wand across the bar code sticker and the pertinent instrument information will appear on the HP 75D display.

e. Prerequisites: None.

f. Input specifications: Not applicable.

g. Output specifications: Not applicable.

h. Interfacing: The HP 75D may be interfaced to devices using the HP-IB, EIA RS-232-C, or GPIO data formats.

i. Power requirements and recommendations: Rechargeable battery pack with recharger/AC adapter is included. The NiCad batteries allow 20 to 30 hours of continuous use between charging.

j. Compatible equipment: The HP 75D is compatible with any computer or peripheral that uses either the HP-IB, RS-232-C, or GPIO data format. The GPIO format is mainly used in only HP equipment, but the other two formats are generally available from many manufacturers.

k. Software available: Custom tailored to user's application by GEMS.

l. Environmental conditions:
Operating temperature: 0 to 45 ^{o}C
Humidity: 0 to 95% RH

m. Application information: The electronic notebook replaces the standard clipboard data sheets that are filled out for instruments that cannot be automated. It eliminates the possibility of unreadable data, misplaced decimal points, and incomplete forms. The electronic notebook allows permanent storage of the

data by media that can be automatically read by almost any computer.

n. Comments: None.

IV-8-3. **Type and description: Wand, bar code, digital, and bar code reader module.** These HP-compatible devices plug into the HP 75D hand-held computer and read bar code directly into the computer memory.

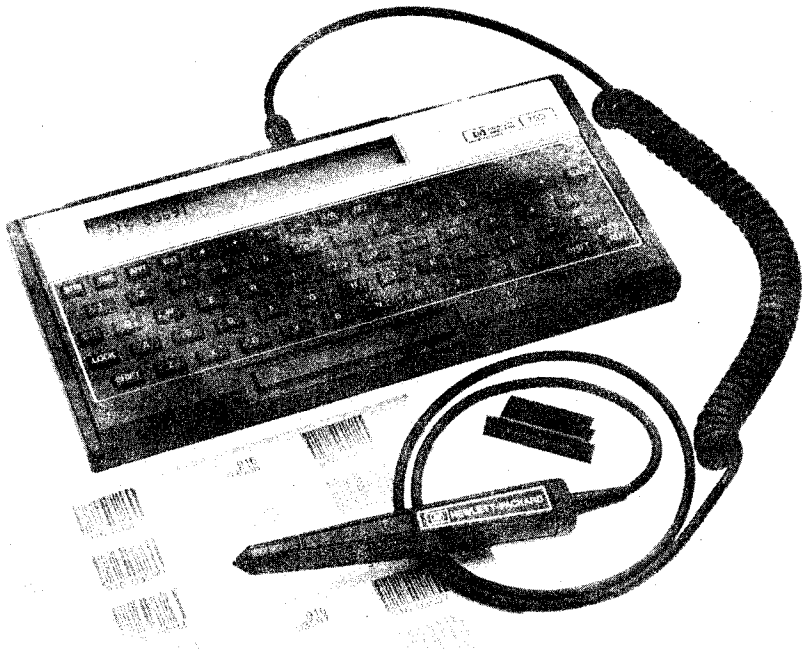

DIGITAL BAR CODE WAND (PHOTO COURTESY OF HEWLETT-PACKARD)

a. Model: HP 92267A digital bar code wand
HP 82725A bar code reader module

b. Manufacturer: Hewlett-Packard, Portable Computer Div.
1000 N.E. Circle Blvd.
Corvallis, OR 97330
(Phone) (800) 367-4772

c. Pricing: HP 92267A, $160.00
HP 82725A, $75.00

d. Operation: The HP 82725A bar code reader module contains the software that decodes scanned bar code on

an 8-kbyte ROM module. The HP 92267A digital bar code wand is a high resolution (0.005 in.) wand that is recommended for reading high density labels which are generally produced on specialized printers.

e. Prerequisites: HP 75D hand-held computer.

f. Input specifications: The wand reads the following bar codes:

3 of 9 code; interleaved 2 of 5 code; industrial 2 of 5 code; 2 of 7 code; code 11; universal product code (UPC A or E); European article number (EAN 8 or 13).

g. Output specifications: Not applicable.

h. Interfacing: Plug compatible with HP 75D hand-held computer.

i. Power requirements and recommendations: Receives power from HP 75D.

j. Compatible equipment: HP 75D hand-held computer.

k. Software available: Not applicable.

l. Environmental conditions: Operating temperature: 0 to 45 °C. Humidity: 0 to 95% RH.

m. Application information: The bar code reader option allows the user to scan the bar code tag of an instrument on-site. The computer automatically stores the site number and calls up the appropriate prompts to guide the operator in acquiring data at that site.

n. Comments: Refer to para. IV-2-13 on the HP 75D hand-held computer.

IV-8-4. Type and description: **Tablet,** graphics. The Inteq graphic tablet converts graphic information into digital form suitable for entry into a computer. By touching a pen-like stylus to any position on a map, diagram, menu, or other graphic presentation, the coordinates of that position are transformed into their digital equivalents. The tablet is compatible with many available graphics software packages, and may be used in conjunction with BASIC, Assembler, and custom language programs.

A menu keyboard, which consists of control and function keys, provides an operational programming capability. The graphic tablet is a sophisticated state-of-the-art functional replacement for a "mouse", and provides much greater versatility, resolution, and accuracy.

a. Model: AFP-11-T

b. Manufacturer: Inteq, Incorporated
13860 Redskin Drive
Herndon, VA 22071
(Phone) (703) 471-1500

c. Pricing: AFP-11-T $1,684.00 (1-4), $1,533.00 (5-9), and $1,365.00 (over 10)

d. Operation: The tablet is microprocessor-controlled, and uses a stylus/pen to generate an output consisting of X-Y coordinate data and pen status information. A soft keyboard provides tablet control with a touch of a pen. Host processor commands are accepted by the tablet microprocessor. Programming point, draw, delta, auto, and menu modes support a wide variety of tablet, workstation, and keyboard applications. Output data may be scaled to match host monitor pixel requirements. Resolutions compatible with printer output or data calculation requirements are programmable. The data input/output interface between the tablet and host computer is bit serial, and asynchronous, in accordance with EIA standard RS-232-C. Data transfer rates from 150 baud to 19.2 kbaud are accommodated. Tablet output data consist of X-Y coordinate and pen status information. Input data consist of software and control information from the host computer.

e. Prerequisites: A host computer with an EIA RS-232-C data port.

f. Input specifications: Not applicable.

g. Output specifications:

Resolution:	Programmable, 200 points/in. maximum
Accuracy:	+0.025 in.

h. Interfacing: The unit may be interfaced to any computer that communicates through an EIA RS-232-C data port.

i. Power requirements and recommendations:

Voltage:	120 or 240 VAC
Frequency:	50/60 Hz
Consumption:	28.75 w, typical

j. Compatible equipment: See h. above.

k. Software available: Not applicable.

l. Environmental conditions:

Temperature:	15 to 40 °C

Physical specifications:

1.	Height:	2.25 in.
2.	Width:	13.5 in.
3.	Depth:	12 in.
4.	Weight:	5.5 lb
5.	Writing area:	8.5 x 11 in.

m. Application information: The model AFP-11-T tablet may be used as an efficient and accurate way of entering data into a computer. By checking the appropriate box on a preprinted form, data are input into the computer faster than conventional data entry methods. The graphic tablet is also suited for CRT cursor control of a graphic or alphanumeric terminal. Data from seismic instrumentation, which are represented by a graph, may be entered into the computer to be processed by tracing the graph with the stylus.

n. Comments: None.

Graphics

IV-9-1. Type and description: Terminal, graphics, color graphic/alphanumeric, model CIT-467. The CIT-467 color graphic/alphanumeric terminal emulates the Tektronix 4010/4014 color displays and permits the operator to create and edit color graphics and text. The CIT-467 has a 12 in. nonglare, black matrix color monitor. Characters are displayed in a 7 X 9 dot matrix with descenders. The keyboard is a detachable 85-key unit that contains a 67-key arrangement similar to a standard typewriter and an 18-key numeric pad. The 18-key numeric pad contains 0 through 9, period, comma, minus, enter, and four general purpose function keys. The terminal is capable of producing eight programmable colors and 64 combinations. The character set is a 96-character ASCII subset (upper and lower case, numeric, line drawing, and punctuation), plus an alternate line drawing set. This character set may be displayed with video attributes such as normal, reverse, blinking, underline, and bold.

a. Model: CIT-467

b. Manufacturer: CIE Terminals
2505 McCabe Way
Irvine, CA 92714
(Phone) (714) 660-1421

c. Pricing: $2,995.00

d. Operation: The model CIT-467 has an effective screen resolution of 570 X 480 dots that is considerably enhanced by an addressable plot area of 4096 X 4096 points. The terminal combines high resolution graphics with text editing that is in compliance with ANSI X 3.64 standards for video screen editors. A cross hair cursor is standard along with a block or underline cursor with attributes such as visible, invisible, blinking, and nonblinking. The CIT-467 also offers Tektronix 4027 compatibility that easily facilitates point, vector, rectangle, polygon, circle, arc, and pie segment drawing. Communication is accomplished by

standard EIA RS-232-C and 20-mA current loop with ANSI standard control sequences and full- and half-duplex operation.

e. Prerequisites: A computer with an RS-232-C data port that runs compatible graphics software.

f. Input specifications: Not applicable.

g. Output specifications:

CRT:	12 in. diagonal, nonglare, black matrix, high density, RGB color monitor
Colors:	8 programmable colors, 64 combinations Active display 220 mm X 150 mm
Format:	24 lines X 80 characters or 24 lines X 132 characters (selectable)
Char/screen:	74 per line, 35 lines (4014 mode). All four Tektronix character sizes are standard.
Addressable plot area:	640 X 462 (Tektronix 4027); 4,096 X 4,096 (Tektronix 4014)
Viewable screen area:	570 dots horizontal, 480 dots vertical
Character size:	7 X 9 dot matrix with descenders
Character set:	96-character displayable ASCII subset (upper and lower case, numeric, line drawing, and punctuation) plus an alternate line drawing set.
Cursor types:	Block or underline (keyboard selectable)
Cursor attributes:	Visible, invisible, blinking, nonblinking (keyboard selectable)
Video attributes:	Normal, reverse, blinking, underline, bold
Character sets:	ASCII, APL
Scrolling:	Smooth or jump

Special plot features: Programmable scale factor for vector size. Relocatable display window origin (allow simulated pan and zoom)

h. Interfacing: Standard EIA RS-232-C and 20-mA current loop.

i. Power requirements and recommendations: Line voltage: 90-128 V RMS single phase, 2-wire; 180-250 V RMS single phase, 2-wire. Line frequency: 47-63 Hz. Current: 1.5 A RMS maximum at 115 V RMS.75 A RMS maximum at 230 V RMS. Input power: 65 w-detachable cord-1.8 m (6 ft).

j. Compatible equipment: This unit may operate with any computer with an RS-232-C data format that runs compatible graphics software.

k. Software available: DISSPLA and TELL-A-GRAF from Integrated Software Systems Corporation (ISSCO). DI3000/GRAFMAKER from Precisions Visuals. PLOT 10 from Tektronix. See Section V-3 of the Available Data Collection and Reduction Software, Report 3.

l. Environmental conditions: Operating temperature: 5 to 40 °C; humidity: 10 to 90% RH. Nonoperating temperature: -40 to 66 °C; humidity 0 to 95%.

m. Application information: The CIT-467 is used for general purpose ASCII asynchronous data transmission and retrieval, text editing, and high resolution color graphics.

n. Comments: None.

IV-9-2. Type and description: **Terminal, graphics.** The Hewlett-Packard 2623A graphics terminal is designed for the graphics user with an extensive on-line capability and system based software. The display features 512 X 390 dot screen resolution and is ideally suited for many display graphics applications such as graphs and pie charts and some design applications. Also, an optional built-in printer is available

that provides the operator with a graphic hard copy by simply pressing a key.

a. Model: HP 2623A

b. Manufacturer: Hewlett-Packard
1820 Embarcadero Road
Palo Alto, CA 94303
(Phone) (213) 877-1282

c. Pricing: $3,250.00

d. Operation: The HP 2623A is supported on HP graphics 1000/II and decision support graphics software. The HP 2623A also works with other third party software such as Tektronix's Plot 10 and is compatible with the Tektronix's 4010 display terminal. In addition, the HP 2623A offers an ANSI software-compatibility option which allows the HP 2623A to be used with host computers and application software that support this protocol. The HP 2623A is capable of generating vectors at 9600 baud, and graphs may be quickly annotated locally in ASCII or six other languages before obtaining a hard copy.

e. Prerequisites: An HP computer that can run HP graphics 1000/II and decision support graphics software or a computer system that can run software compatible with the Tektronix 4010 display terminal.

f. Input specifications: Not applicable.

g. Output specifications: Screen resolution: 512 X 390 dots.

h. Interfacing: Interfacing is accomplished through an EIA RS-232-C port of the computer used for terminals.

i. Power requirements and recommendations: 110 VAC at 60 Hz.

j. Compatible equipment: The HP 1000A computer or any other comparable HP computer that can run either the graphics 1000/II or the decision support graphics software. Also any computer that can run the Tektronix Plot 10 software package may be used.

k. Software available: See Section V-3 of Available Data Collection and Reduction Software, Report 3.

l. Environmental conditions: This instrument is designed to operate in a computer room environment.

m. Application information: The HP 2623A is primarily designed for providing a graphics capability for the HP 3000A computer and comparable HP computer systems, but can also emulate the Tektronix 4010 display terminal.

n. Comments: None.

IV-9-3. Type and description: **Terminal, color graphics,** video. The Tektronix 4105 terminal computer display is designed to facilitate the user's ability to create and edit color graphics and color text. This model has a 13 in., antiglare etched screen. Characters are displayed in 5- x 7-dot matrixes with descenders in a 6- x 12-dot character cell. The model 4105 terminal may be mounted on an adjustable stand that permits it to be tilted up or down, swiveled left or right, lowered or elevated, or moved forward or backward. The unit features a low profile, detached DIN standard keyboard with ASCII characters, a 14-key numeric keypad, four special function keys, eight dedicated programmable function keys, and an N-key rollover. In the graphics mode, the user may access up to eight colors for graphics and eight colors for alphanumeric text to be displayed on the screen when both the graphics and the alphanumeric planes are displayed. Complete ASCII upper- and lower- case alphanumerics, as well as alternate character fonts, may be displayed with attributes such as normal, bold, underscored, blinking, reverse video, and color.

a. Model: 4105

b. Manufacturer: Tektronix, Inc. (TEK)
P.O. Box 1700
Beaverton, OR 97075
(Phone) (800) 547-1512

c. Pricing: $3995.00

d. Operation: The effective TEK 4105 terminal resolution is considerably enhanced by an addressable display matrix of 4096 x 4096 points. The user may "window in" on any portion of the matrix, and by retransmitting the data from the host, display the selected window with significantly greater detail. Text editing is in compliance with ANSI X3.64 standards for screen editors. The model 4105 is especially designed to work with EDT, TV, VI, and EMACS screen editors. The unit supports host definition of independent work areas within the display plus keyboard control of text editing tasks. The alphanumeric surface may be used to display host communications without interfering with the graphics on screen. This dialog area may be transparent or opaque, and user-defined from 2 to 30 lines with up to 146 lines of scrollable memory. Integral to the keyboard is a joystick used for positioning the cross hair cursor, or scrolling text in the dialog area. The 4105 terminal can sustain transmission rates of up to 19.2 kbaud and alphanumeric text transmission as fast as 38.4 kbaud.

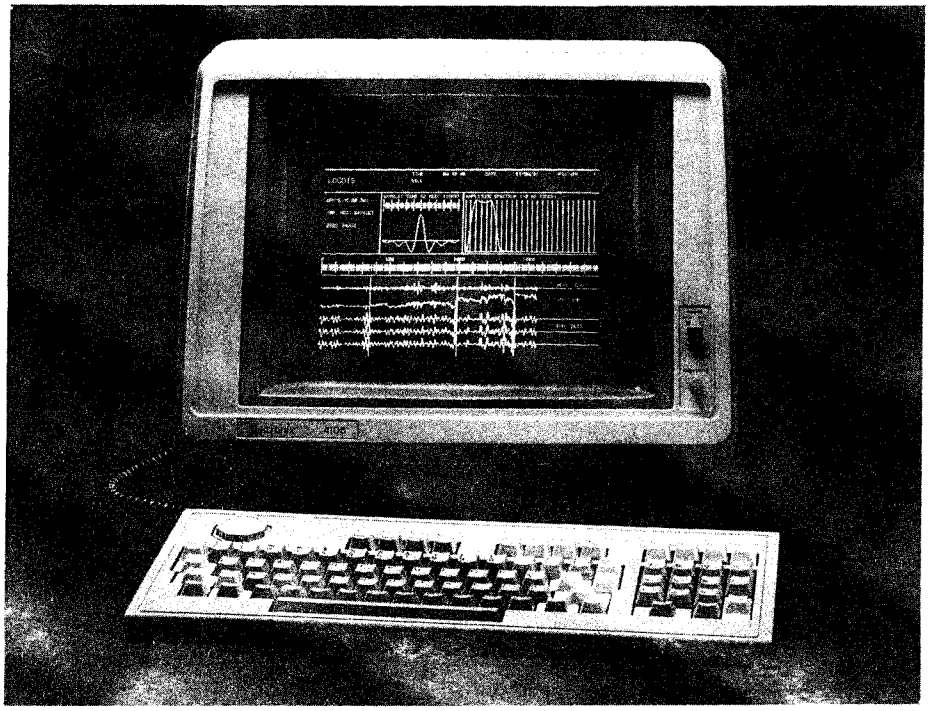

4105 COLOR TERMINAL (PHOTO COURTESY OF TEKTRONIX, INC.)

e. Prerequisites: A computer with an EIA RS-232-C data format that runs compatible graphics software.

f. Input specifications: Not applicable.

g. Output specifications:

Display size:	13 in.
Viewing area:	9.5 in. x 7 in.
Color palette:	64
Displayable colors	
Graphics:	8
Alphanumeric:	8
Resolution:	480 x 360
Addressable points:	4096 x 4096
Character form:	5 x 9
Character cell:	6 x 12

h. Interfacing: EIA RS-232-C asynchronous ASCII data port.

i. Power requirements and recommendations:

Voltage:	115 VAC (nominal)
	87 - 128 VAC
Frequency:	48 - 66 Hz
Power consumption:	200 w

j. Compatible equipment: This unit may operate with any computer with an EIA RS-232-C data format that runs compatible graphics software. This model may be operated completely independent of a host system with the TEK 4170 local graphics processor. Also, the TEK 4695 color graphics copier produces A-size (8 1/2 x 11 in.) copies of the model 4105 display.

k. Software available: (See Section V-3 of Available Data Collection and Reduction Software, Report 3.)

1. PLOT 10 interactive graphics library.

2. PLOT 10 Easy Graphing II from Tektronix.

3. DISSPLA and TELL-A-GRAF from ISSCO (Integrated Software Systems Corporation).

4. SAS/GRAPH from SAS Institute, Inc.

l. Environmental conditions:

Temperature (operating):	10 to 40 °C
Humidity (operating):	10 to 75% RH.

m. Application information: The model 4105 terminal is used for general purpose ASCII asynchronous data transmission and retrieval, text editing, and high resolution color graphics.

n. Comments: None.

IV-9-4. Type and description: Terminal, graphics. The following list of manufacturers of graphic terminals is provided for reference. The manufacturer should be consulted for additional capabilities, options, specifications, and computer compatibility.

Advanced Electronic Design Inc.
440 Potero Ave.
Sunnyvale, CA 94086
(Phone) (408) 733-3555

Model 1280, DMA and serial interfaces $18,500.00

Aydin Controls
414 Commerce Dr.
Fort Washington, PA 19035
(Phone) (215) 657-8600I

Model Aycon, 16 in. color, DMA interface to PDP-11 or VAX computer $6,200.00

Colorgraphics Communications Corp.
2379G John Glenn Dr.
Atlanta, GA 30366
(Phone) (404) 455-3921

Model MVI-100, 19 in., 8 color, RS-232-C (X-on/X-off) interface $3,200.00

Cybernex Ltd.
1257 Algoma Rd.
Ottawa, Ontario, Canada K1B 3W7

Model SA7800, 14 in. green, RS-232-C $2,000.00

Digital Equipment Corp.
146 Main St.
Maynard, MA 01754
(Phone) (617) 897-5111

Model VT240, 12 in. green, RS-232-C/RS-423 $2,200.00
Model VT241, 13 in., 64-color, RS-232-C/RS-423 $3,200.00

Genisco Computer Corp.
3545 Cadillac Ave.
Costa Mesa, CA 92626
(Phone) (714) 556-4916

Model HS-40, color graphics, writable control store memory and database manager $15,000.00

Intecolor Corp.
Div. of Intelligent Systems Co.
225 Technology Park
Norcross, GA 30092
(Phone) (404) 449-5961

Model E8001, 19 in. color, RS-232-C $4,000.00

Lundy Electronics & Systems Inc.
1 Robert Lane
Glen Head, NY 11545
(Phone) (516) 671-9000

Model PC/2000, color (8-planes), personal computer that supports MS-DOS $10,000.00

Qume Corp.
2350 Qume Dr.
San Jose, CA 95131
(Phone) (408) 942-4000

Model QVT-511, 14 in., 8-color, RS-232-C X-on/X-off, $3,000.00

Ramtek Corp.
2211 Lawson Lane
Santa Clara, CA 95050
(Phone) (408) 988-2211

Model 4225, 1,280- by 1,024-pixel, 256-colors $14,000.00
Model 6221, 13 in., 8-colors, RS-232-C $6,000.00

Raster Technologies, Inc.
9 Executive Park Dr.
N. Billerica, MA 01862
(Phone) (617) 667-8900

Model 175, 512 kbyte display-list memory $16,000.00
Model 180, 4 Mbyte display-list memory $20,000.00
Model One/10, 13 in. CRT, 256-color, RS-232-C $8,000.00

Westward Technology Inc.
63 Great Rd.
Maynard, MA 01754
(Phone) (617) 897-1700

Model 3219W, 2,048- by 1,568-pixel, monochrome $14,000.00

Printers

IV-10-1. Type and description: **Printer, bidirectional, dot matrix.** These printers provide letter quality (LQ) or near letter quality (NLQ) draft and graphics. They are based on a high resolution needle matrix print technique. This technique gives: high quality print, high print speed (80-300 cps), and a high number of print characters. Several optional print fonts and paper handling devices allow the printer to be installed in all typical office environments. They use standard 8-1/2 x 11 in. paper and various ribbon styles.

a. Model: H136-1A/3Ai; 3101-1/3 (Centronics Data)
GP300PC; GP300L PC (Philips Peripherals, Inc.)
MPS-15; MPS-25 (Citizen America Corp.)
SD-15; SR-15 (Star Micronics, Inc.)
7035; 7065 (North Atlantic Qantex)
1550S+NLQ; 8510S+NLQ (C.Itoh Digital Products)

b. Manufacturer: Centronics Data
Computer Corp.
One Wall Street
Hudson, NH 03051
(Phone) (603) 883-0111

Citizen America Corp.
2425 Colorado Ave.
Santa Monica, CA 90404
(Phone) (213) 453-0614

North Atlantic Qantex
60 Plant Ave.
Hauppauge, NY 11788
(Phone) (800) 645-5292

Philips Peripherals, Inc.
385 Oyster Point Blvd., Unit 12
South San Francisco, CA 94080
(Phone) (415) 952-3000

Star Micronics, Inc.
200 Park Ave.
New York, NY 10166
(Phone) (212) 986-6770

C. Itoh Digital Products, Inc.
19750 S. Vermont Avenue, Suite 220
Torrance, CA 90502
(Phone) (800) 423-0300

c. Pricing:

Model	Manufacturer	Price (P/S)
H136-1A/3A	Centronics Data	$745.00/$820.00
3101-1/3	Centronics Data	$235.00/$245.00
MPS-15	Citizen America Corp.	$649.00
MPS-25	Citizen America Corp.	$849.00
7035	North Atlantic Qantex	$1795.00
7065	North Atlantic Qantex	$2395.00
GP300PC	Philips Peripherals, Inc.	$1998.00
GP300L	Philips Peripherals, Inc.	$2452.00
SD-15	Star Micronics, Inc.	$599.00/$650.00
SR-15	Star Micronics, Inc.	$799.00/$850.00
1550S+NLQ	C.Itoh Digital Products	$769.00/$849.00
8510S+NLQ	C.Itoh Digital Products	$549.00/$629.00

d. Operation:

Common: All of the dot matrix printers listed use the wire pin impact method onto an inked ribbon. They all produce the standard U.S. ASCII characters and also provide graphics characters and optional character sets. Most are software selectable, but some have ROM cartridges. All use the standard 8-1/2" x 11" paper. All are designed for easy connection to an RS-232-C interface or Centronics-compatible computers.

Specific differences of the near letter quality printer are:

two-pass, 9 pin head: Centronics and North Atlantic

single-pass,18 pin head: Star Micronics, Citizen, C.ITOH, and Philips

e. Prerequisites:

Philips: Not specified.
Centronics: Tractors and paper roll holder are optional (3101 series).
C.Itoh: IBM PC compatibility option; links with IBM PC DOS.
North Atlantic: Model 7035 is optionally available with Diablo protocol compatibility. This allows operation with WordStar and other word processing programs.

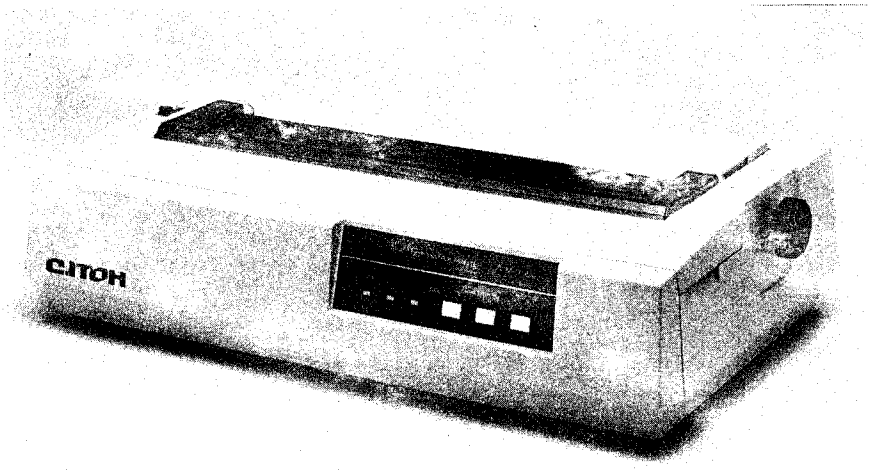

MODEL 1550S (PHOTO COURTESY OF C.ITOH)

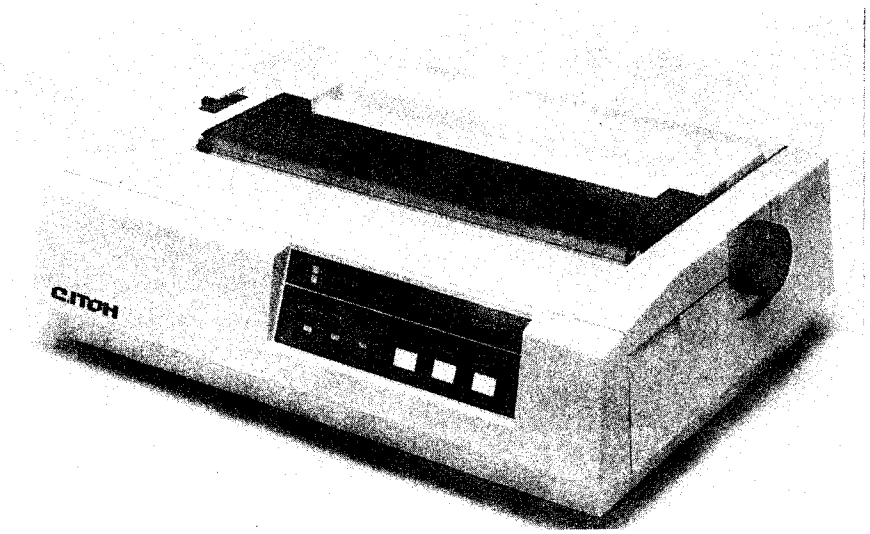

MODEL 8510S (PHOTO COURTESY OF C.ITOH)

f. Input specifications:

Manufacturer	Buffer Size	Model	Interface	Baud Rate
Centronics	3-kbyte	H136	Centronics	110-19.2k
Centronics	2-kbyte	H136 optional	RS-232-C (current loop)	
Centronics	Not specified	3101 series	RS-232-C 20-mA (current loop)	

Micronics	16-kbyte	SD-15	Centronics RS-232-C/20-mA (current loop)	
Citizen	1-k/8-kbyte	MPS-15	Centronics	
	8-k/65-kbyte	MPS-25	RS-232-C	
C.Itoh	4-kbyte	1550S+NLQ	Serial RS-232-C	
	2-kbyte	8510S+NLQ	Serial RS-232-C	
	2-kbyte	8510S+NLQ	Centronics	
North Atlantic	4.7-kbyte	7065	Centronics	
	4.7/12.7-kbyte	7035	RS-232-C	19.2 kbaud
Philips	3-kbyte	GP300PC	RS-232-C	300-19.2 kbaud
	3-kbyte	GP300L	RS-232-C	

g. Output specifications:

Centronics, model 3101 series H136

Print Speed (cps)		Dot Matrix (VxH)	
Draft	LQ/NLQ	Draft	NLQ
50	12/	9 x 9	18 x 23
160	27/	11 x 9	23 x 16

Micronics, model SD-15, SR-15

Print Speed (cps)		Dot Matrix (VxH)	
Draft	LQ/NLQ	Draft	NLQ
160		11 x 9	11 x 17
200		11 x 9	11 x 17

Citizen, model MPS-15, MPS-25

Print Speed (cps)		Dot Matrix (VxH)	
Draft	LQ/NLQ	Draft	NLQ
200	50/	9 x 9	9 x 18
200	50/	9 x 9	9 x 18

C.Itoh, model 1550S+NLQ, 8510S+NLQ

Print Speed (cps)		Dot Matrix (VxH)	
Draft	LQ/NLQ	Draft	NLQ
180	45/120	9 x 9	9 x 18
180	45/120	9 x 9	9 x 18

North Atlantic, model 7065, 7035

Print Speed (cps)		Dot Matrix (VxH)	
Draft	LQ/NLQ	Draft	NLQ
300	60/125	9 x 5	9 x 12
150/180	/75		

Philips, model GP300PC, GP300L

Print Speed (cps)		Dot Matrix (VxH)	
Draft	LQ/NLQ	Draft	NLQ
300	80/	9 x 9	25 x 18
300	80/	9 x 9	25 x 18

h. Interfacing: Refer to input specifications.

i. Power requirements and recommendations: 115 V, 50/60 Hz: Micronics, Citizen; 115 or 130 VAC, 50/60 Hz: North Atlantic, Philips, C.Itoh, Centronics.

j. Compatible equipment: All computers with either a Centronics or RS-232-C interface card.

k. Software available: In most cases, the printers are supported by the operating system. All are IBM compatible in graphics mode. The North Atlantic printers are compatible with the following protocols: DEC LA120, LA34, REGIS graphics, ANADEX 9620, 9625; and EPSON MX-80 and MX-100 with Graftrax Plus.

l. Environmental conditions:
Temperature range: 5 - 35 °C, approximate for all models
Humidity: 10 to 80% RH.

m. Application information: Data processing, word processing, telecommunications.

n. Comments: All printers have various character sets to suit the user.

IV-10-2. **Type and description: Printer, line.** The model CI-300 matrix line printer provides the user with a printing capability of up to 300 lines/min. (LPM), and may be run with most any desktop or personal computer. The model CI-300 brings up to 400 dots/in. resolution to character-form generation, and word processing applications. The unit is also suited for a wide

range of business and scientific graphics applications. It also features user selection of print speed and density, character and line spacing, line feed speed, print control, and many other options. It includes an extensive standard character set, including 96-character ASCII character set, an international character set, ruled line generator, block characters, and engineering characters.

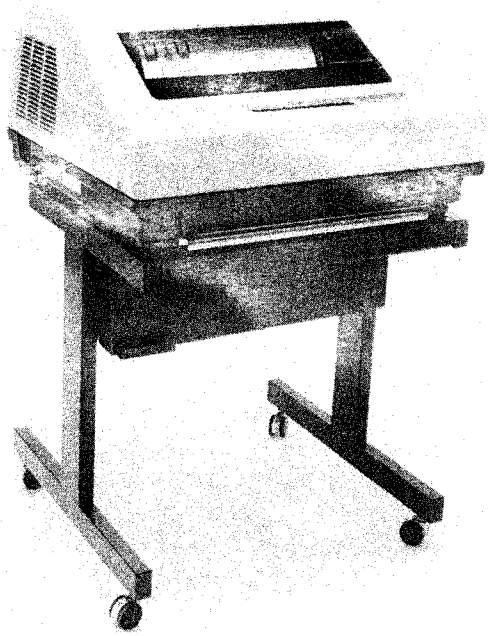

CI-300 LINE PRINTER (PHOTO COURTESY OF CIE TERMINALS)

a. Model: CI-300

b. Manufacturer: CIE Terminals
2505 McCabe Way
Irvine, CA 92714-6297
(Phone) (714) 660-1421

c. Pricing: $4495.00

d. Operation: This matrix line printer has variable print speeds up to 300 LPM which allow a variety of character sizes from standard to eight times. Bold, slant, and character underlining are easily implemented and available on the same line. The horizontal resolution of the unit is from 60 to 400 dots/in., while the vertical resolution may be set up to 144 dots/in. The

CI-300 contains full graphic capability for bar code, OCR, line generation, forms generation, and business and scientific printing. Communications with a computer may be accommodated by either an EIA RS-232-C serial interface or a Centronics parallel interface. Most of the popular desktop or personal computers have the capability of running one of these data formats. A Dataproducts parallel interface kit is also available. This allows the user to design his own interfacing protocol, if desired.

e. Prerequisites: A computer with an EIA RS-232-C serial interface port or a Centronics parallel data port.

f. Input specifications: Centronics 8-bit parallel or EIA RS-232-C serial.

g. Output specifications:

	Data Processing	Letter Quality
Character matrix:		
Uppercase (H+V):	9 x 7 in.	17 x 13 in.
Lowercase:	9 x 9 in.	17 x 17 in.

Character size:
Width: x2/x4/x8
Height: x2/x4/x8
Data resolution: (dots/in.)
Horizontal density:
Character: 60/70/80/100/120/140/160/200/240/280/320/400
Graphic: 60/70/80/100/120/140/160/200
Vertical density: 72/144
Maximum print speed: 300 LPM

h. Interfacing: EIA RS-232-C serial interface and Centronics parallel interface.

i. Power requirements and recommendations: Voltage: power tappable 85-132 and 170-264 VAC. Consumption: Average 300 w (450 w, maximum). Frequency: 47-400 Hz.

j. Compatible equipment: Not applicable.

k. Software available: Not applicable.

l. Environmental conditions:

Operating temperature:	4 - 40 °C
Operating humidity:	5- 90% RH.(noncondensing)
Storage temperature:	-40 - 70 °C
Storage humidity:	5 - 95% (noncondensing)

Physical characteristics:
26 in. W x 24 in. deep x 13 in. H (w/o pedestal)

Reliability:
Mean time between failures is 3,861 hr.

m. Application information: The model CI-300 matrix line printer is used to produce a high-speed hard copy of data stored in most any desktop or personal computer.

n. Comments: None.

IV-10-3. Type and description: **Printer, bidirectional, dot matrix.** This near letter quality, selectable print resolution (5 x 11-normal, 9 x 11-high resolution, 5 x 7-compressed, and 18 x 11-double width) printer accepts 8-1/2" fanfold or roll paper with form feed. It prints up to 136 characters /line. Standard character set is U.S. ASCII-95 printable characters. It features plug-in custom character cartridges, uses Centronics parallel or RS-232-C serial, 110-9600 baud interfacing, and prints 120 cps (1200 baud).

a. Model: Execuport 1200

b. Manufacturer: Computer Transceiver Systems, Inc.
P.O. Box 15
East 66 Midland Avenue
Paramus, NJ 07653
(Phone) (201) 261-6800

c. Pricing: $995.00 to $1,895.00

d. Operation: This is a portable printer that may be connected to virtually any computer, depending on the type of interface options that the user needs. Centronics parallel, RS-232-C, and IBM parallel interfaces are available. It uses a 200-sheet cartridge or 100-ft roll (optional).

e. Prerequisites: Interface cards.

f. Input specifications: RS-232-C, Centronics, and IBM parallel; 1-kbyte character buffer.

g. Output specifications:
Print rate: 140 cps (10 cpi) 280 cps (17 cpi), bidirectional printing. 120/240 dots/in. horizontal 96 dots/in. vertical.

Print matrix:		
	9 x 11	80 char/line
	5 x 11	80 char/line
	18 x 11	41 char/line
	5 x 7	136 char/line
	10 x 7	73 char/ line

h. Interfacing:

Model	Type
1205	Centronics
1230	IBM compatible
1210, 1220	RS-232-C
1220	RJ11C internal 212/103 modem

i. Power requirements and recommendations: 120 VAC ±10%, 75 w, 50-480 Hz.

j. Compatible equipment: Not available.

k. Software available: Not available.

l. Environmental conditions: Not available.

m. Application information: Not available.

n. Comments: None.

IV-10-4. Type and description: **Printer/terminal, dot matrix impact.** This printer/terminal uses roll or sheet paper. Up to 132 print positions (compressed) available. This printer uses an RS-232-C serial or 20-mA current loop for input. The unit has a built-in 300 baud modem, and fourteen selectable character fonts.

a. Model: Execuport 400 Series

b. Manufacturer: Computer Transceiver Systems, Inc.
P.O. Box 15
East 66 Midlan Avenue
Paramus, NJ 07652
(Phone) (201) 261-6800

c. Pricing: $795.00 to $1,895.00

400 SERIES (PHOTO COURTESY OF COMPUTER TRANSCEIVER SYSTEMS, INC.)

d. Operation: The Execuport 420 is a receive only terminal with up to 9600 baud rate. The Execuport 430 is a keyboard send-receive terminal with up to 1200 baud rate. The only necessary operation information is to connect the proper cables between the computer and terminal. These are supplied with the printer.

e. Prerequisites: Requires that either an RS-232-C or 20-mA current loop card be installed in the computer. The IBM serial card has both capabilities.

f. Input specifications: Model 420 has a 2048 character print buffer for up to 9600 baud. Models 430 and 440 have a print buffer of 256 characters at up to 1200 baud.

g. Output specifications: Minimum of 30 cps, 55 cps @10 cpi, 80 cps @15 cpi 2, 3, 4, 6, or 12 lines/in., 14 character fonts. Ribbon life of 1.5 million characters is standard.

h. Interfacing: Any computer with RS-232-C or 20-mA current loop may be used.

i. Power requirements and recommendations: 87 to 132 VAC 50/60 Hz. Less than 35 w while printing.

j. Compatible equipment: Not available.

k. Software available: Not available.

l. Environmental conditions: Not available.

m. Application information: May be used as a stand-alone I/O terminal or as a printer.

n. Comments: None.

IV-10-5. **Type and description: Printer, laser, letter quality.** This is a dry monocomponent electrophotographic page printer that uses standard 8-1/2 x 11in. paper with up to 150 characters across the page. The printer system includes an IBM-compatible controller card with interface cable, a laser engine with toner cartridge and 8-1/2 x 11in. paper tray, laser printer software (version 2.0 - Epson ESC capabilities), and thirteen printer fonts: Courier 9, Courier 8 Bold, Bookman 18 Proportional, Bookman 18 Truncated, PC7, MX9, MX9B, MX9MI, MX9W, MX10, MX7, PI10, and PCSS7 rotated (landscape).

a. Model: LP-300

b. Manufacturer: Corona Data Systems, Inc.
275 East Hillcrest Drive
Thousand Oaks, CA 91360
(Phone) (800) 621-6746

c. Pricing: $3395.00 (LP-300); optional print fonts are $50.00 each.

d. Operation: The Corona LP-300 laser printer system uses an IBM bus that connects the two via a cable. Optional graphics software is used to deliver superior resolution bar and pie charts, illustrations, and complex computer graphics. The low cost toner cartridge, which prints approximately 3500 pages, snaps out easily for replacement.

e. Prerequisites: Controller card for IBM PC.

f. Input specifications: Not applicable.

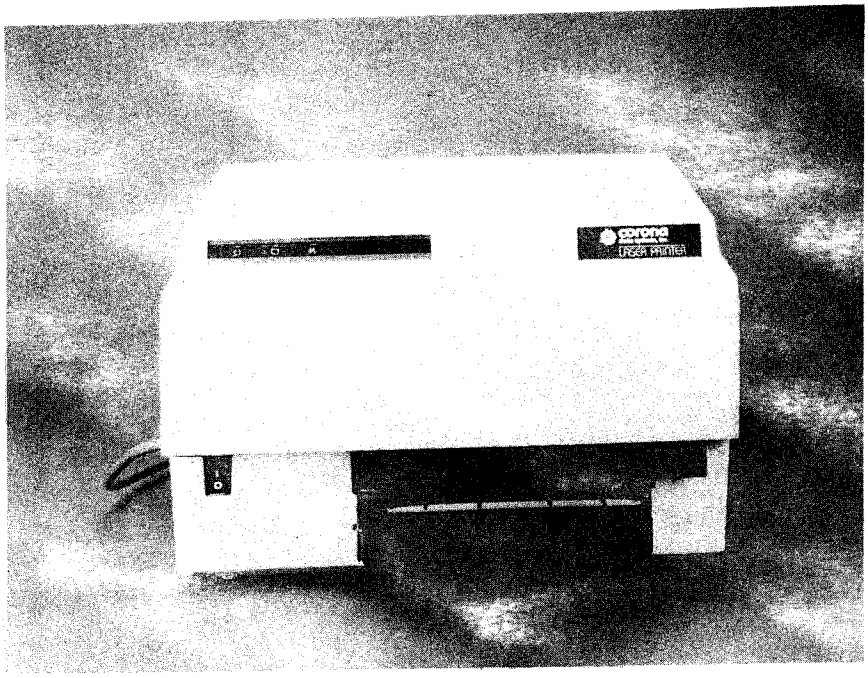

LP-300 LASER PRINTER (PHOTO COURTESY OF CORONA DATA SYSTEMS)

g. Output specifications: Up to 8 pages/min., 150 characters/line in text mode. Noise level: 55 dB; text mode character heights 6-18 point fonts; multiple fonts per page.

h. Interfacing: IBM PC compatible bus.

i. Power requirements and recommendations: 110 VAC/60 Hz; 0.9 KVA max., 0.3 KVA standby.

j. Compatible equipment: Not available.

k. Software available: Not available.

l. Environmental conditions:
Main Body/Cartridge: Temperature 10-32.5 ^{o}C
Humidity: 20% to 80% RH.

m. Application information: For applications where graphics and letter quality printout is required or desired.

n. Comments: A minimum of 512 kbytes of PC memory for full-page graphics. Data Terminals and Communications (DTC) has a similar laser printer which costs $7995.00.

IV-10-6. <u>Type and description</u>: **Printer, dot-matrix.** The Epson LQ-1500 dot matrix printer provides the user with a near letter quality printing capability and a high-speed printing capability in the same printer. In the draft mode, the LQ-1500 can print 200 characters / sec. (CPS) in a 9- x 17-dot matrix format. In the letter quality mode, the printer prints fully formed characters at a print speed of 67 CPS. This printer also has a graphics mode which produces charts or graphs with a resolution of 240 x 180 dots / in. Character sets include ASCII, international, italic and 128 downloadable characters which may be used to create any character or symbol the user can define within a 37 x 24-dot matrix. Draft and letter quality typefaces include proportional, elite, condensed, expanded, bold, italic, and subscript and superscript for small print and scientific notations.

a. <u>Model</u>: LQ-1500

b. <u>Manufacturer</u>: Epson America, Inc.
2780 Lomita Blvd.
Torrance, CA 90505
(Phone) (213) 539-9140

c. <u>Pricing</u>: $1,295.00

d. <u>Operation</u>: The model LQ-1500 printer uses a 24-pin print head controlled by an internal processor. It can place dots in a 37 x 17 matrix forming each proportional, near letter quality character. These dots overlap to an effect similar to a typewriter. Communication with a computer may be accommodated by any one of five different interface options. Epson offers a Centronics parallel interface, an EIA RS-232-C interface, and an IEEE-488 interface, each with a 2-k input buffer. The 2-k input buffer allows the computer to fill the buffer via one of the three interface data formats, and then continue on to other duties while the stored data are being printed. The Centronics parallel and the EIA RS-232-C interfaces may be fitted with a 32-k input buffer that allows the computer to fill the buffer and then continue on to other duties while the stored data are being printed.

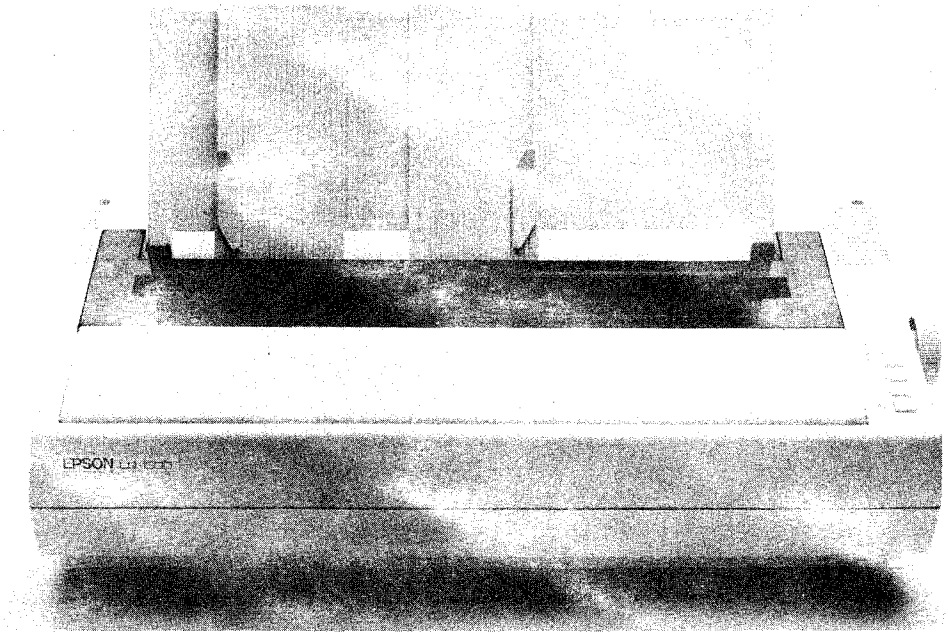

LQ-1500 DOT MATRIX PRINTER (PHOTO COURTESY OF EPSON)

e. Prerequisites: A computer with an EIA RS-232-C, IEEE-488, or a Centronics parallel data port.

f. Input specifications: Options include:
Centronics style 8-bit parallel interface,
EIA RS-232-C serial interface, or
IEEE-488 general purpose interface bus (GPIB)

g. Output specifications:

Print method: impact dot matrix
Print direction: bidirectional printing with logic seeking
Maximum print speed: 200 CPS
Number of pins in head: 24
Line spacing: 1/6, 1/8, or programmable

Printing characteristics:
Character set: 96 ASCII characters with descenders
32 international characters
96 italic characters
128 downloadable characters

Character structure:

Mode	Normal	Super/Subscript
Draft	9 x 17	7 x 11
Near letter quality	15 x 17	11 x 11
Letter quality (proportional)	37 x 17	23 x 11

h. Interfacing: Options are:
2-k buffered Centronics parallel interface
2-k buffered EIA RS-232-C serial interface
2-k buffered IEEE-488 GPIB interface
32-k buffered EIA RS-232-C serial interface
32-k buffered Centronics parallel interface

i. Power requirements and recommendations: Voltage: 90 to 123 VAC. Frequency: 49.5 to 60.5 Hz. Power consumption: 300 VA maximum; 60 VA typical.

j. Compatible equipment: Not available.

k. Software available: Not available.

l. Environmental conditions:
Operating temperatures: 5 - 35 °C
Operating humidity: 10 - 80% RH. (noncondensing)

Physical characteristics:
Dimensions (in.): 5.12 x 23.78 x 14.29
with tractor feed (in.): 7.2
with cut sheet feeder (in.): 12.5
Weight (lbs): 30.87

Reliability: Print head life expectancy is 200 million characters.
MTBF (excluding print head life): 6300 hr @ 25% duty cycle.

m. Application information: This printer is used to produce a hard copy of data stored in a computer that has an EIA RS-232-C serial, Centronics parallel, or IEEE-488 data port. High-speed printing or near letter quality printing may be accommodated by this unit. The device also performs high density, monochrome graphics.

n. Comments: None.

IV-10-7. Type and description: **Printer, letter quality, spinwriter.** This NEC 2000 series spinwriter printer provides the

user with a letter quality printing capability that may be run with most any desktop or personal computer. It uses bidirectional, logic seeking printing at 200 words / min. with 10, 12, or 15 characters / in. spacing. More built-in features include: word processing functions such as auto-proportional spacing, bold facing, shadowing, and underlining. The printer also supports subscripting and superscripting.

a. Model: NEC 2000 series

b. Manufacturer: NEC Information Systems, Inc.
1414 Massachusetts Ave.
Boxborough, MA 01719
(Phone) (617) 264-8000

c. Pricing: $895.00

d. Operation: The NEC spinwriter features a unique thimble-shaped print element. A single print thimble may have as many as two type faces or contain multiple languages. Some thimbles have special characters such as superscripts or scientific or arithmetic symbols. More than 60 thimbles of different type styles are available. Communication with a computer may be accomplished by any one of four different interface options: an EIA RS-232-C/CCITT V.24-compatible serial interface, an EIA RS-232-C Diablo 1610-compatible serial interface, a Centronics-compatible parallel interface, or an IBM PC-compatible interface. Most of the popular desktop or personal computers have the capability of running at least one of these data formats.

e. Prerequisites: A computer with an EIA RS-232-C, an EIA RS-232-C/ CCITT V.24, or a Centronics parallel data port. Also, an IBM PC is especially accommodated.

f. Input specifications: Options are:
Centronics 8-bit parallel
EIA RS-232-C serial
EIA RS-232-C/CCITT V.24
IBM PC-compatible parallel interface.

g. Output specifications:

Print element: NEC spinwriter print thimbles
Print direction: Bidirectional w/logic seeking
Max. print speed: 200 words/min.
Character structure: Letter quality

h. Interfacing: See input specifications options.

i. Power requirements and recommendations: 115 VAC +15%, 50-60 Hz.

j. Compatible equipment: Not applicable.

k. Software available: PC-DOS and MS-DOS.

l. Environmental conditions:

Operating temperature: 5 - 38 °C
Operating humidity: 30 - 85% RH. (noncondensing)
Storage temperature: -25 - 60 °C
Storage humidity: 0 - 90% RH. (noncondensing)

Physical characteristics:
18 in. W x 13 in. deep x 5 in. H
Weight: 26 lbs

Reliability: MTBF 4000 hr.

m. Application information: The NEC 2000 series spinwriter is used to produce a hard copy of data stored in most any desktop or personal computer in a letter quality printing style.

n. Comments: None.

IV-10-8. Type and description: **Printer, graphics.** This printer/plotter has the capability to emulate Versatec Electrostatic Plotters. Intelligent graphics processor options are variable bar codes and forms generation. Because the 4160 combines small dot sizes with substantial dot overlap, curves are virtually smooth. Engineering drawings, complex graphs, bar charts, and pie chart weather maps, all appear sharp and crisp. Output speed is as impressive as plotting quality. With a plot rate of 2300 dot rows /min. at a maximum plot width of 13-1/2 in., the 4160 produces a detailed 8-1/2 x 11 in. drawing (A-size)

in about 40 sec., while an 11 x 17 in. drawing (B-size) is completed in approximately 75 sec.

a. Model: 4160

b. Manufacturer: Printronix
17500 Cartwright Rd.
P.O. Box 19559
Irvine, CA 92713
(Phone) (714) 863-1900

c. Pricing: List $5380.00 for 1-4 less 5%; 5-7 less 7%; 8-9 less 9%; 10-20 less 10%; optional Versatec Plotter adapter $995.00. PI-80 interface controller, RS-232-C $99.00.

d. Operation: The printer plotter operates as any normal printer with the following operator controls: ON LIN, TOF, 8LPI, RESET, FORMS THICKNESS (1-5 parts), PA (paper advance), POWER (on-off), TEST FORMS LENGTH.

The printer has an automatic self-test of ten functions. The display to the operator is an alphanumeric indicator.

e. Prerequisites: PI-80 interface controller for use with Versatec software and to emulate the Versatec V-80, 1200, and 3200A series electrostatic printers.

f. Input specifications: 8-bit parallel Centronics port with up to 100,000 char/sec.

g. Output specifications: Print rate: 130 alphanumeric lines/min.
Character size: 0.1 H x 0.07 W, normal print
0.2 H x 0.07 W, doubleheight printing
Horizontal format: 136 char/line, 10 char/in.
Vertical format: 6 lines/in. or 8 lines/in.
Vertical forms control: Length selectable, 0-99 lines from top of form. Software VFU, 0-255 lines or dot rows
Dot spacing: Nominal 0.006in. 160 dpi (dots /in.)
168 dpi vertical

h. Interfacing: Standard Centronics parallel PI-80 interface controller option. RS-232-C optional.

i. Power requirements and recommendations:
Voltage: 115 VAC ±10% Freq. 50/60 Hz
230 VAC ±10% single phase

j. Compatible equipment: Not specified, but standard Centronics output peripheral drivers work.

k. Software available: Versatec plotter software, and operating system. (See para. IV-11-4 herein.)

l. Environmental conditions:

Temperature range:	5 to 40 °C operating
	-20 to +65 °C storage
Humidity:	30 to 80% RH. operating
	10 to 80% RH. storage

m. Application information: For use where high reliable printing and graphics are necessary. The printer is ideal for CAD/CAM and CAE check plot and other applications where electrostatic printers are often used. In addition, graphics and alphanumerics may be easily intermixed.

For printing applications requiring high resolution correspondence-quality and OCR characters, the 4160 uses an 11 x 20 dot matrix which allows four dot rows for fully formed lowercase descenders. Forms, reports, manuscripts, proposals, invoices, shippers, and other documents are produced at a rate of 130 lines per minute.

n. Comments: The 4160 with IGP-30 meets Mil-Std-1189 and 139H label requirements plus DOD/LOGMARS requirements.

IV-10-9. Type and description: **Printer, daisy wheel, letter quality.** This printer has a standard Centronics and a variety of optional interfaces. It also has a 15-in. paper capacity.

a. Model: TP750, Televideo
DWP 510, Radio Shack

b. Manufacturer: Televideo Systems, Inc.
550 East Brokaw Road
P.O. Box 6602
San Jose, CA 95150-6602
(Phone) (800) 521-4897

Radio Shack
Computer Customer Services
Dept. 7879
400 Atrium - One Tandy Center
Fort Worth, TX 76102
(Phone) (817) 390-3861

c. Pricing: TP750 ($1195.00), optional RS-232-C ($99.00), Sheet feeder ($495.00). DWP 510 ($1495.00), Sheet Feeder ($220.00)

d. Operation: The printers feature quick printwheel replacement, quiet operation, speed, an optional bidirectional tractor for paper feeding, proportional spacing, graphics, program modes, word processing print capabilities, and high reliability. Features forward and reverse paper feed, half-line feed, backspace, and underline. Supports boldface, strike through, double-underline, super and subscripts.

MODEL TP750 PRINTER (PHOTO COURTESY OF TELEVIDEO SYSTEMS, INC.)

e. Prerequisites: Needs tractor feed for full capabilities.

f. Input specifications:

Manufacturer	Model	Buffer Size	Interface
Radio Shack	DWP 510	1.2 kbyte	Centronics
Televideo	TP750	1.2 kbyte	Centronics/ optional RS-232-C

g. Output specifications:

Manufacturer	Model	Print Speed	Characters/ Line	Horz Resolu
Televideo	TP750	42CPS Shannon	132, 158, 198	120 units/in.
		50CPS IBM "AAA" Text		
Radio Shack	DWP 510	43CPS	132(10 cpi)	Not specified

h. Interfacing: Centronics parallel for both with optional RS-232-C.

i. Power requirements and recommendations:
Radio Shack: 120 VAC, 60 Hz, 141 w
Televideo: 115/230 VAC, 50/60 Hz, 70 w

j. Compatible equipment: Diablo API instruction set for Televideo TP750. Both are compatible with IBM and other computers with standard interfaces.

k. Software available: Not available.

l. Environmental conditions: 5-40 ^{o}C.

m. Application information: Used with most small computer systems, telecommunications, and word processing.

n. Comments: None.

Plotters

IV-11-1. Type and description: **Plotter, digital, general purpose.** The Gould Colorwriter general purpose digital plotter provides a hardcopy graphics capability to almost any mini-graphics or microcomputer via an RS-232-C or Centronics communication interface. The model 6120 produces hardcopy graphics on paper or overhead transparency film in both 8-1/2 X 11 in. and 11 X 17 in. chart sizes. The Colorwriter produces most popular graphics formats such as pie charts, bar graphs, engineering drawings, line graphs, and illustrations. It features a computer-controlled, multipen carriage with a built-in pen capping storage system that allows the computer to plot in seven different colors without a manual pen change.

a. Model: 6120

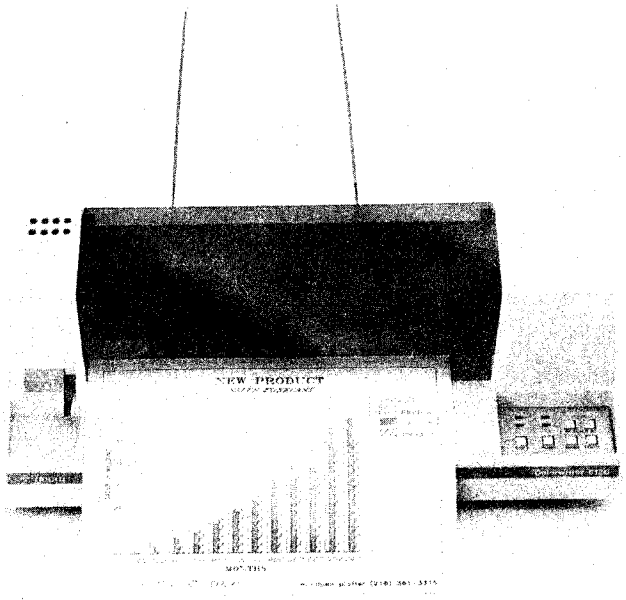

COLORWRITER 6120 (PHOTO COURTESY OF GOULD, INC.)

b. Manufacturer: Gould, Inc. Recording Systems Div.
6301 Ivy Lane, Suite 106
Greenbelt, Maryland 20770
(Phone) (301) 345-0050

c. Pricing: $995.00

d. Operation: The Colorwriter 6120 plotter is supported by a variety of commercially available software packages that may be run by most mini- or microcomputers. This plotter uses Hewlett-Packard graphics language (HPGL)-based graphics language to facilitate the commercial software and to allow the operator to develop his own software. HPGL controls functions such as pen movement, labeling, character set movement, axis placement, arc and circle drawing, and digitizing. A front panel control panel allows the user to manually control some of the plotting functions. These controls include easy-to-use paper load, a self-test demonstration graph, reset to initialize plotter, pause to interrupt and view plot, pen up/down to manually change pen state, and a scale control to zoom in on and expand specific portions of a chart or to rotate a chart on the writing media. The pens are available in either ceramic tips or roller ball tips, both tips are precisely 0.012 in. width. These pens are available in seven different colors: black, brown, red, orange, green, blue, and violet.

e. Prerequisites: Computer with RS-232-C or Centronics communication capability and associated plotter software.

f. Input specifications: Not applicable.

g. Output specifications:

Media size: 8.5 X 11 in. and 11 X 17 in.
Plotting area: 10.8 X 15.2 in. maximum
Pens: 7 individual pens, automatically exchanged
Media format: Single sheet
Media types: 7 colors - 0.3 mm general purpose/transparency ceramic tip and 0.3 mm long life roller ball tips
Paper hold: Friction roller drive

Performance specifications:

Pen speed: 7.88 in./sec programmable
Resolution: 0.002 in.
Internal buffer: 500 bytes standard
Character plotting speed: 5 char/sec nominal

Acceleration: 1 g
Repeatability: 0.008" single pen
0.010" pen to pen
Plotting accuracy: 0.3% deflection ± .2 mm

h. Interfacing: RS-232-C or Centronics parallel.

i. Power requirements and recommendations: 120 V, 220 V, or 240 V ± 10% at 45 to 400 Hz.

j. Compatible equipment: IBM PC XT and compatibles including Compaq, Columbia and Eagle PC and Turbo, Apple II+ and IIe, Northstar Advantage, TI Professional, Burroughs B-20 Systems, Convergent Technologies, Inc., Gould Power Station Series, Mainframe Computers by DEC, IBM, Control Data, Sperry, and virtually any other micro- or minicomputer, or mainframe computer.

k. Software available: Lotus 1-2-3, Lotus Symphony, Ashton Tate Framework, Decision Resources Chartmaster and Signmaster, BPS Business Graphics, Apple Business Graphics, Graphic Communication Graphwriter, SPC Pfs: Graph, Sorcim SuperCalc 3 and 3.2, Autodesk Auto CAD, Personal CAD Systems CADPlan, and Northstar Busi-Graph II.

l. Environmental conditions: Operating temperature: 5 to 40 deg C.

m. Application information: The Gould Colorwriter 6120 general purpose digital plotter provides a hardcopy graphics capability to almost any mini- or microcomputer via an RS-232-C or Centronics communication interface.

n. Comments: None.

IV-11-2. **Type and description: Plotter, six-pen graphics.** The HP 7475 six-pen graphics plotter is a plotter that may be used with almost any desktop or personal computer, using an EIA RS-232-C or IEEE-488 interface. The model 7475 is capable of making plots on two different sizes of papers, 8-1/2 x 11 in., or 11 x 17 in. The instrument also makes 8-1/2- x 11-in. overhead transparencies. Hewlett-Packard provides six-pen stalls that feature an automatic pen capping and pen damping capability that

helps maintain the writing quality of the pens. The user may select six pens differing in color and width to place in these stalls. Hewlett-Packard offers ten pen colors: gold, burnt orange, brown, red, violet, blue, turquoise, lime green, green, and black. These pens are offered in two widths, thick for bold heading and thin for details. A keyboard on the front panel provide the user with some added features beyond the plotting. Among these are the ability to test pens before plotting, stopping and examining a plot in progress, rotating a plot 90° , and digitizing or scaling points.

a. Model: HP 7475 (IBM model 7372 is equivalent)

b. Manufacturer: Hewlett-Packard
P.O. Box 10301
Palo Alto, CA 94303-0890
Phone: (415) 857-8000

c. Pricing: $1895.00

d. Operation: The Hewlett-Packard 7475 plotter is supported by a variety of professional graphics software packages for almost all popular desktop and personal computers. If the user wants to assemble his own program, HP plotters contain a graphics language called Hewlett-Packard graphics language (HPGL). HPGL controls functions like pen movements, labeling, character set movements, axis placement, arc and circle drawing, and digitizing. The HP 7475 plotter has a front control panel that allows the user access to some of the plotter features. The user may manually start a built-in test plot and test his pen colors. He may also have the chart automatically come to the front of the plotter, examine it, and have it continue exactly where the plot began. The plot may be manually rotated 90° to incorporate a horizontal chart into a vertical format. Front-panel control also lets the user digitize or scale points.

e. Prerequisites: Computer with an EIA RS-232-C or IEEE-488 communication capability and associated plotter software.

f. Input specifications: Options are: EIA RS-232-C or IEEE-488 data formats.

g. Output specifications:

Resolution:	.001 in.
Repeatability:	.004 in.

h. Interfacing: The HP 7475 plotter may be operated by any computer using the EIA RS-232-C or IEEE-488 data format.

i. Power requirements and recommendations:

Source:	100, 120, 220, 240 VAC
Frequency:	48-66 Hz
Consumption:	35 w, maximum

j. Compatible equipment: Not applicable.

k. Software available: See Software report para. V-3-1.

l. Environmental conditions:

Operating temperature:	0 - 55 °C
Storage temperature:	-40 - 75 °C
Physical specifications:	5 in. H x 22.4 in. Wx 14.5 in. deep
Weight:	16 lb

m. Application information: The HP 7475 six-pen plotter is used to organize complex data into an easier, understandable form such as a bar graph or pie chart. This multicolor graphics capability may help clarify data such as technical performance, statistical comparisons, organization charts, production curves, and labor distribution diagrams.

n. Comments: None.

IV-11-3. Type and description: **Plotter, digital.** The IBM XY/749 digital plotter is an intelligent eight-pen color plotter used for displaying scientific and engineering measurements in a bar graph, pie chart, or other similar form. The plotter also offers such features as vector generation, digitizing, circle/arc generation, character generation, axis generation, and point

marking to allow the user to generate his own graphs and text. It uses the standard 8-1/2 x 11 in. format for reports and graphs and also is available with an overhead transparency kit. A choice of three communications interfaces is offered which includes, an RS-232-C interface, an IEEE-488 interface, and a Centronics 8-bit parallel interface. These optional interfaces allow this device to operate with almost any microcomputer, minicomputer, or intelligent data system.

a. Model: XY/749

b. Manufacturer: IBM Instruments, Inc.
Orchard Park
P.O. Box 332
Danbury, CT 06810
(Phone) (800) 243-7054

c. Pricing: Not available.

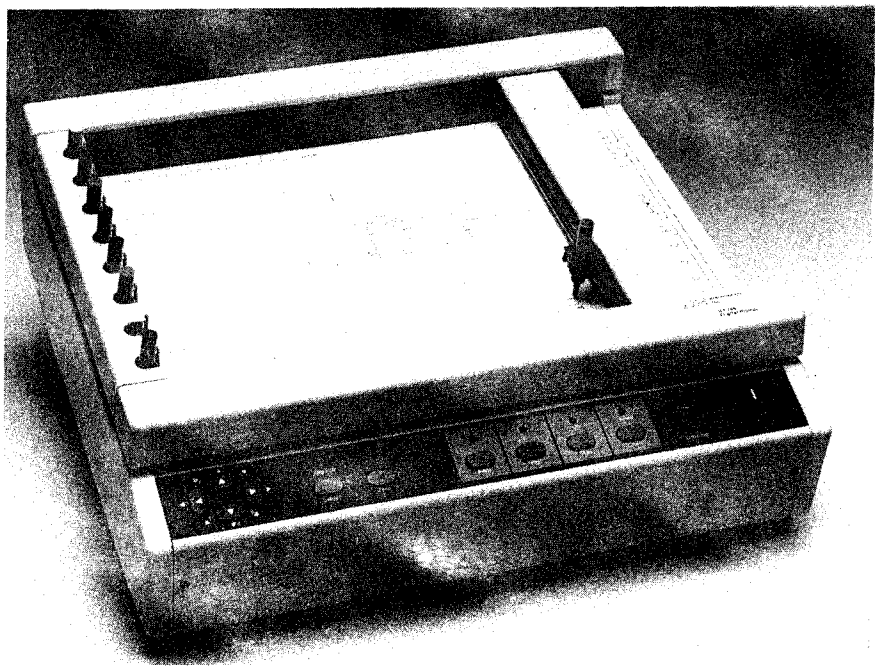

XY/749 DIGITAL PLOTTER (PHOTO COURTESY OF IBM)

d. Operation: The IBM XY/749 digital plotter is controlled by a microprocessor which provides linear and curvilinear interpolating, digitizing, and all 96 ASCII characters. Complex drawings may be generated by

simply issuing a sequence of commands, parameters, and coordinate points. All functions may be invoked with a single ASCII character which permits detailed drawings to be executed with small memory-saving programs. This plotter also features a digitizing function that is used to determine the coordinate values of given points in existing drawings. A sight is inserted in place of the pen and the desired point is located with the direction control pad. Upon command, the point coordinates are transmitted to the user's computer. The XY/749 may be operated in three different modes which allow it to act like a plotter, printer, and monitor. In the plot mode, the XY/749 interprets ASCII command characters to plot straight lines, circles, axes, point marks, and print character strings under control of the user's application program. In the print mode, the XY/749 may be used for low volume printing. The monitor mode transforms the XY/749 into a message monitoring device. All received and transmitted data are printed. This is a useful diagnostic aide when the user is determining if a particular bug is in the application program, system software, telephone link, or the plotter.

e. Prerequisites: Computer or intelligent data system.

f. Input specifications: Not applicable.

g. Output specifications:

Vector plotting speed:	Two program-selectable speeds Fast: 45 cm/s at 45 ° Slow: 16 cm/s any directions
Character Plotting speed:	Approx. 3 char/sec (3mm size)
Smallest addressable move:	0.1 mm
Internal resolution:	0.05 mm
Repeatability:	Better than ±0.1 mm same pen Better than ±0.3 mm different pens

h. Interfacing: Options include: RS-232-C, IEEE-488 Centronics 8-bit Parallel

i. Power requirements and recommendations:
Voltage: 120 VAC at 60 Hz
Consumption: 30 VA typical

j. Compatible equipment: Almost any computer or intelligent data system.

k. Software available: The plotter is operated by issuing a sequence of commands, parameters, and coordinate points from the user's computer.

l. Environmental conditions:
Operating Temperature: 5 to 40 °C
Storage Temperature: -25 to 65 °C
Humidity: 75% RH max.

m. Application information: The IBM XY/749 digital plotter may be used to create bar graphs or pie charts that organize complex numerical data into a more easily understood form. This multicolor graphics capability may help clarify data such as technical performance, organizational charts, production curves, and statistical comparisons of scientific or engineering measurements.

n. Comments: None.

IV-11-4. **Type and description: Plotter, multimedia.** The Versatec V-80 series multimedia printer/plotter provides the function of three separate peripherals contained in one unit. It may function as a line printer, a plotter, and a dedicated CRT hardcopy device when used with available hardcopy controllers. The model V-80 prints on a variety of different papers and films, such as opaque, vellum, and translucent papers and electrographic clear and matte film. Versatec also offers several input interfaces that enable the V-80 to run with most popular computer systems.

a. Model: V-80

b. Manufacturer: VERSATEC
A Xerox Company
2710 Walsh Avenue
Santa Clara, CA 95051
(Phone) (408) 988-2800

c. Pricing: $9,950.00; $2,000.00 - $5,000.00 for software

d. Operation: The model V-80 is available with either 100 points/inch resolution or 200 points/in. resolution. Also a long line receiver for operation of up to 1,000 ft from the host computer is available. Other features include character underline to selectively highlight print, a serial (RS-232-C) interface, a choice of optional or custom-designed character sets, and the capability of printing up to 256 unique characters. Supplies such as paper, toner, and concentrate may be reached from the top of the unit. The toner comes in a one gallon disposable cartridge that plugs directly into the V-80. The toner concentrate is added automatically by a microprocessor- controlled toner sensing system, but manual concentrate-addition capability is also provided. Standard on the V-80 is an integral self-test feature that verifies the operation of the unit and minimizes the need for external test equipment.

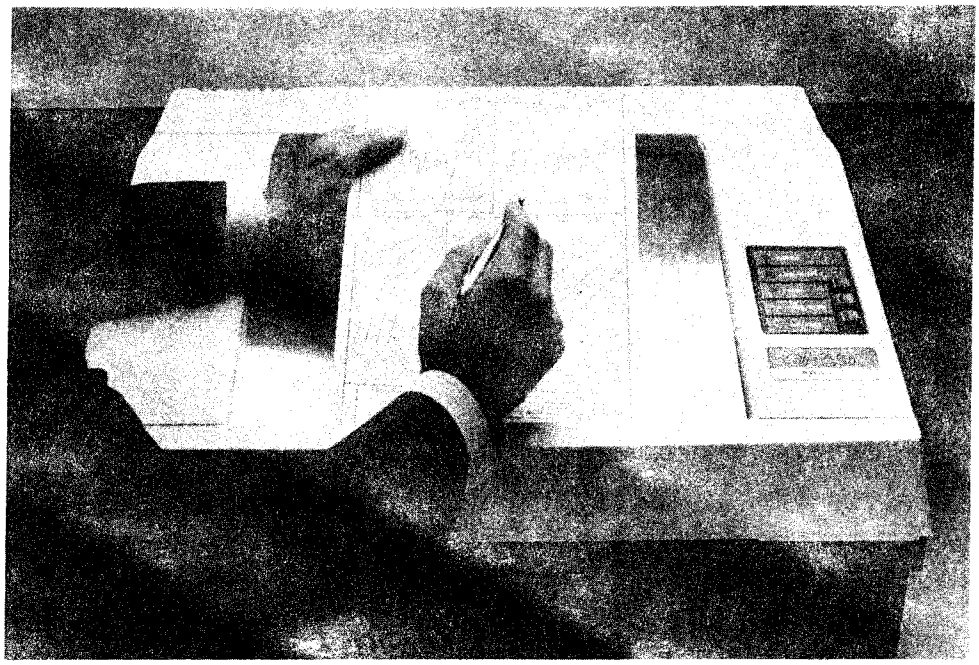

V-80 PRINTER/PLOTTER (PHOTO COURTESY OF VERSATEC)

e. Prerequisites: A compatible computer or video terminal.

f. Input specifications: Not applicable.

g. Output specifications:

Plotting Specifications	Standard
Resolution horizontal & vertical Points/in.	200
Plotting speed, maximum in./sec.	1.0
Plot bytes / scan	264
Plotting width in.	10.56
Discrete points produced in each configuration	2112
Data rate required for maximum plot speed (bytes/second)	52,800
Point size-mils	5
Point-to-point position, maximum deviation, horizontal-mils	2
deviation, vertical-mils	2
Maximum accumulated error horizontal (perpendicular to paper motion)	±1/2%
vertical (direction of paper motion)	±1/2%
Plot buffers (plot scans)	12
Print speed (maximum) lines/min.	1000
Print columns/line	132
Print lines/in., factory setting	8.5
Print lines/in., switch selectable range	5.10
Character set, standard	96 U.S. ASCII
Character font, standard	Gothic
Character size, standard dot matrix	16 x 16
Print buffers (print lines)	3

h. Interfacing:

Parallel interface: Maximum input rate is one million 8-bit bytes/second (burst rate). TTL interface circuitry, single ended.

Serial interface: Operates asynchronously and is pin and voltage level compatible with RS-232-C standards. Data rates from 50 to 38,400 bits/sec.

Note: Versatec does not recommend plotting with the serial interface because the data rate is too slow.

IEEE-488	Mounted in the V-80, incorporates all mechanical and electrical specifications of the IEEE-488 standard.

i. Power requirements and recommendations:

Power requirements:	102/118/204/236 VAC ±10% 50 or 60 Hz
Wall outlet required:	Three-wire with ground
Power Usage	
Operating power:	285 w
Maximum power:	375 w
Heat dissipation:	973 BTU/hr average 1280 BTU/hr maximum

j. Compatible equipment:

Digital Equipment Corporation (DEC)
PDP-11/23, and PDP-11/73, (Refer to para. IV-2-6)
MicroVAX (Refer to para. IV-2-5)

Hewlett-Packard
1000 system, and HP 264X display terminals
(Refer to para. IV-2-9)

k. Software available: Versaplot software is a flexible and efficient system of subroutines designed to produce virtually any graphic representation for a wide variety of applications on all Versatec plotters. All Versaplot packages include a basic set of CALL-compatible pen plotter routines. These routines constitute a standard interface between popular commercial graphic packages and existing user application programs. All Versaplot software packages include complete FORTRAN and assembler source code. (Note: Any user modification voids the standard warranty.)

l. Environmental conditions:

Operating environment:	Temperature, 32 to 104 °F (0 to 40 °C)
Relative humidity:	10 to 95% RH. (noncondensing)

m. Application information: The Versatec V-80 printer/plotter provides the functions of a line printer, a plotter, and a dedicated CRT hardcopy device. It is offered with a wide variety of input interfaces and software packages that make it compatible with a number of popular computer systems.

n. Comments: None.

Statistical Multiplexers

IV-12-1. Type and description: **Multiplexer, three-port statistical.** The Complexx TX3 multiplexer concentrates data from three computer peripheral devices onto one line resulting in substantial savings in data communications costs. Three terminals or printers in a remote office may be connected to a remote computer with one telephone line, requiring only one pair of TX3s and one pair of modems. The TX3 multiplexer automatically corrects any errors caused by transmission line interference. It communicates with almost all ASCII async, EIA RS-232-C-compatible computers and peripherals such as terminals, printers, personal and minicomputers.

a. Model: TX3

b. Manufacturer: Complexx Systems, Inc.
4930 Research Drive
Huntsville, AL 35805
(Phone) (205) 830-4310

c. Pricing: $895.00

d. Operation: This multiplexer device permits several computer peripherals to communicate with a host computer on a single telephone line. Multiplexers work in pairs, one concentrates the data from the peripherals onto one transmission line while the other separates the data and routes them to the correct port of the host computer. The multiplexer makes the maximum use of transmission bandwidth and works much more efficiently than a conventional communications link. The TX3 multiplexer communicates with almost all ASCII, async, and EIA RS-232-C-compatible computers and peripherals. It uses a large buffer and several flow control options to allow devices of different speeds to communicate with each other. The set-up parameters for both the remote unit and the host unit may be entered from a single terminal connected to one of the units. These parameters are selected from menus generated by the TX3 multiplexer making initial setup fairly easy. These parameters are permanently stored in a nonvolatile RAM so that they may be recovered in case of a power failure. The unit also corrects any errors

caused by transmission line interference. Its internal protocol checks all transmitted data and makes sure they are correctly received and automatically retransmitted when a line error occurs.

e. Prerequisites: Computer and peripherals that communicate with ASCII, async, or EIA RS-232-C data ports.

f. Input specifications: Selectable options are:

1. One input port of ASCII, async, or EIA RS-232-C.

2. Three input ports of ASCII, async, or EIA RS-232-C.

g. Output specifications: Selectable options are the same as input specifications.

h. Interfacing: The TX3 multiplexer may be interfaced to any computer or peripheral that communicates in ASCII, async, or EIA RS-232-C format.

i. Power requirements and recommendations:

Voltage:	103 - 127 VAC
Frequency:	60 Hz
Consumption:	25 w

j. Compatible equipment: Not applicable.

k. Software available: Not applicable.

l. Environmental conditions:

Storage temperature:	-20 to 50 °C
Operating temperatures:	0 to 45 °C
Humidity:	0 to 95% RH. (noncondensing)

Physical specifications:	2.25 in. H x 10.75 in. W x 10 in. deep
Weight:	8 lbs

m. Application information: Statistical multiplexers are useful when peripherals to a host computer are located far away and a telephone or leased line is needed. The multiplexer allows more than one device to use this line eliminating the need for a separate line for each device; thus, substantially lowering communication costs.

n. **Comments**: None.

IV-12-2. **Type and description: Multiplexer, statistical.** The MICOM Micro 800/2 data concentrators are statistical multiplexers designed to allow up to 16 terminals, synchronous and asynchronous, to share a single telephone line. They come in different models that multiplex either two channels, four channels, eight channels, 12 channels, or 16 channels. They require no changes to existing hardware or software, and provide each terminal with an apparent direct connection to its host computer. The Micro 800/2 uses microcomputer technology to offer such features as automatic retransmission-on-error; data compression; terminal-initiated channel configuration; support terminals; and a "command port" for on-line testing, reconfiguration message broadcasting, and performance monitoring.

a. Model: Micro 800/2

b. Manufacturer: MICOM SYSTEMS, Inc.
20151 Nordhoff Street
Chatsworth, CA 91311
(Phone) (805) 583-8600

c. Pricing:

Model	# Channels	Price
M822	2	$1450.00
M824	4	$1850.00
M828	8	$2750.00
M8212	12	$3700.00
M8216	16	$4600.00

d. Operation: This multiplexer allows a number of computer peripherals to communicate with a host computer on a single telephone line. Multiplexers work in pairs, one concentrates the data from the peripherals onto one transmission line while the other separates the data and routes them to the correct port of the host computer. To multiplex the peripherals to one computer port, MICOM offers the MICOM 200 port concentrator, which greatly reduces the complexity of demultiplexing using computer software. If telephone lines are to be used, a pair of modems must provide the data link between the two Micro 800/2s. This data link must be point-to-point and full duplex, but may operate with asynchronous modems with baud rates of up to 9600

bits per second (bps), and synchronous modems with baud rates of up to 19,200 bps. The synchronous channel option lets any of the channels in a 2-channel or 4-channel unit, or any of the top 4 channels of the 8-, 12-, or 16-channel units to be switch-selected to support synchronous, asynchronous, or clocked asynchronous terminals. The background printer channel priority feature allows a remote printer to operate as fast as possible, but not so fast as to degrade the response time to interactive CRT display terminals. Also, channels on the Micro 800/2 may be configured for different speeds at each end with automatic speed conversion performed within the Micro 800/2. This speed selection, along with the other configuration parameters, is selected for each channel with DIP switches accessed via a flip-down front panel. These parameters may also be set via a terminal that is connected to the Micro 800/2 command port. This command port also provides the user with a wide variety of monitoring and testing capabilities, such as centralized troubleshooting, alarm messages, and periodic reports concerning data traffic and integrity.

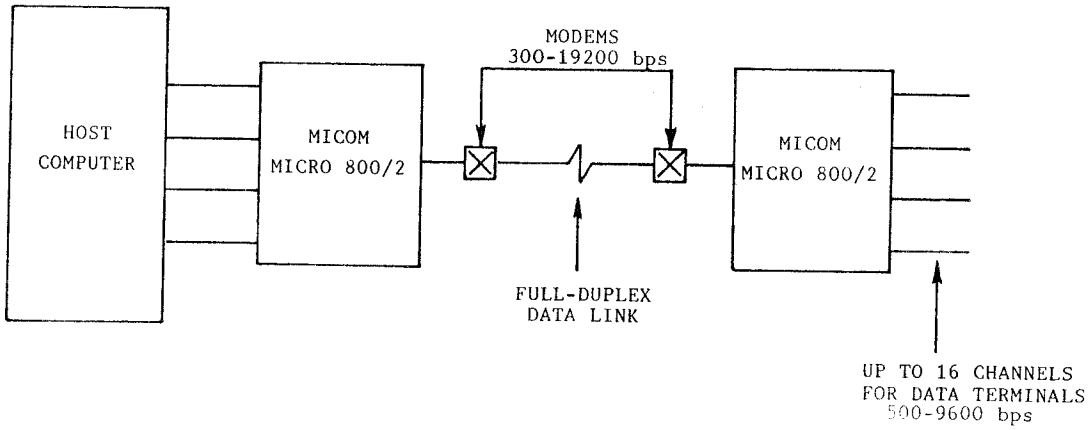

FIGURE 39. MICOM MODEM

e. <u>Prerequisites</u>: Computer and peripherals that communicate using the EIA RS-232-C data format.

f. Input specifications: Selectable options are: one, two, four, eight, twelve, or sixteen EIA RS-232-C data ports.

g. Output specifications: Same as input specifications.

h. Interfacing: The Micro 800/2s may be interfaced to any computer or peripheral that communicates using the EIA RS-232-C data format.

i. Power requirements and recommendations: Voltage: 100/115/230/255 VAC at ±10%
Frequency: 45 to 65 Hz

Consumption:	2-channel models	15 w
	4-channel models	40 w
	8-channel models	50 w
	12-channel models	65 w
	16-channel models	75 w

j. Compatible equipment: Not applicable.

k. Software available: Not applicable.

l. Environmental conditions:
Operating temperature: 0 to 45 °C
Relative humidity: 0 to 95% RH. (noncondensing)

m. Application information: Statistical multiplexers are useful when peripherals to a host computer are located far away and a telephone or leased line is needed. The multiplexer permits more than one device to use this line eliminating the need for a separate line for each device, thus substantially lowering the communication costs.

n. Comments: The MICOM statistical multiplexers permit the user to select various methods of interface handshaking which are commonly used for EIA RS-232-C, i.e., XON/XOFF, DTR, CTS/RTS. The handshaking method selected is used for all channels, but does not allow each channel to select the handshake option.

Communication Adapters

IV-13-1. Type and description: **Data switch.** This switch permits connection of two RS-232-C lines to one RS-232-C port. It is available with 4-, 12-, and 24-lead switching and a key-operated switch for security.

a. Model: S-SW010

b. Manufacturer: Black Box Corporation
P.O. Box 12800
Pittsburgh, PA 15241
(Phone) (412) 746-5500

c. Pricing: $99.25

d. Operation: Manually operated switch.

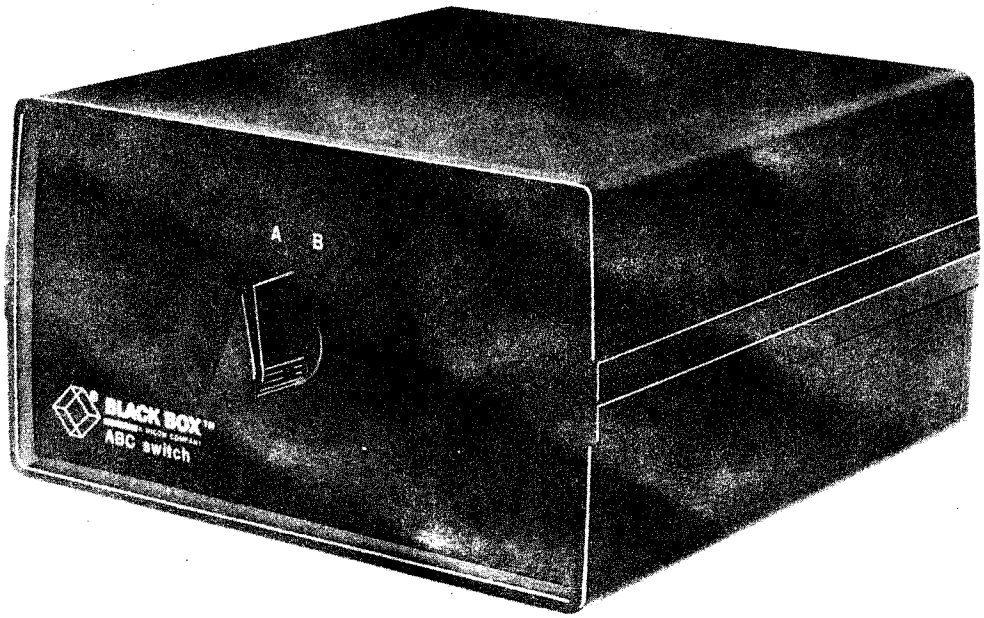

S-SW010 DATA SWITCH (PHOTO COURTESY OF BLACK BOX CORP.)

e. Prerequisites: Three devices with RS-232-C ports.

f. Input specifications: RS-232-C standard.

g. Output specifications: RS-232-C standard.

h. Interfacing: Available with socket or plug DBM 25 RS-232-C standard connector.

i. Power requirements and recommendations: No power required.

j. Compatible equipment: Any devices with RS-232-C ports.

k. Software available: Not applicable.

l. Environmental conditions: 0 to 50 °C
0 to 95% RH. (noncondensing)

m. Application information: This unit may be used for systems with only one RS-232-C port and two RS-232-C devices to be connected to it. The unit does not allow simultaneous operation of two RS-232-C devices and requires manual operation of the switch.

n. Comments: The Black Box Corporation makes several models of data switches for various switch configurations, number of devices, connector types, etc.

IV-13-2. Type and description: **Interface, RS-232-C to current loop.** This interface permits RS-232-C ports to be connected to 20-mA current loop devices. It may also be used to extend RS-232-C lines by using an interface on each end, this connects two RS-232-C ports via a 20-mA current loop between. The 20-mA current loop can transmit up to 180 M. The RS-232-C is limited to 15 M.

a. Model: S-CL410

b. Manufacturer: Black Box Corporation
P.O. Box 12800
Pittsburgh, PA 15241
(Phone) (412) 746-5500

c. Pricing: $95.00
$45.00 for optional power supply

d. Operation: DTE/DCE switch.

e. Prerequisites: A device with an RS-232-C port and a device with a 20-mA current loop port, or two devices with RS-232-C ports.

f. Input specifications: RS-232-C standard and 20-mA current loop.

g. Output specifications: RS-232-C standard and 20-mA current loop.

h. Interfacing: DBM 25 RS-232-C standard connector and two twisted-pair cables.

S-CL410 CONVERTER (PHOTO COURTESY OF BLACK BOX CORP.)

i. Power requirements and recommendations: May be powered by RS-232-C port or with optional S-PS150 power supply using 110 VAC @ 4 mA.

j. Compatible equipment: Any devices with RS-232-C ports and/or 20-mA current loop.

k. Software available: Not applicable.

l. Environmental conditions: 0 to 50 °C
0 to 95% RH. (noncondensing)

m. Application information: Interface connects RS-232-C ports to 20-mA current loop devices, or may be used to extend RS-232-C lines up to 180 meters by using an interface on each end of an RS-232-C line.

n. Comments: The Black Box Corporation also makes RS-232-C to current loop connectors for multichannel (4, 8, 12, 16) applications, and 30- and 60-mA current loops.

IV-13-3. **Type and description: Adapter, RS-449-to-RS-232-C.** This adapter comes in two models for RS-232-C DTE and RS-449 DCE, or RS-232-C DCE and RS-449 DTE. The adapter allows connection between RS-449 and RS-232-C ports.

a. Model: S-IC 503 and S-IC 504

b. Manufacturer: Black Box Corporation
P.O. Box 12800
Pittsburgh, PA 15241
(Phone) (412) 746-5500

c. Pricing: $89.00

d. Operation: Not applicable.

e. Prerequisites: Two devices, one with an RS-232-C port and the other with an RS-449 port.

f. Input specifications: RS-232-C and RS-449 standards.

g. Output specifications: Same as input specifications.

h. Interfacing: DBM 25 and DBM 37 standard RS-232-C and RS-449 connectors.

i. Power requirements and recommendations: RS-232-C and RS-449 ports.

j. Compatible equipment: Any devices with RS-232-C or RS-449 ports.

k. Software available: Not applicable.

l. Environmental conditions: 0 to 50 °C
0 to 95% RH, (noncondensing)

m. Application information: Adapter may be used when two devices with RS-232-C and RS-449 ports are required to communicate.

n. Comments: None.

IV-13-4. **Type and description: Interface converter, RS-232-C-to-RS-422.** The Black Box 232-422 interface adapter provides electrical and mechanical interconnection of EIA RS-232-C interface circuits with EIA RS-422 interface circuits. The device adapts RS-232-C modem equipment to RS-422 terminals or RS-422 modem equipment to RS-232-C terminals.

a. Model: 232-422

b. Manufacturer: Black Box Corporation
P.O Box 12800
Pittsburgh, PA 15241
Phone: (412) 746-5500

c. Pricing: $219.00

d. Operation: The EIA RS-232-C and the RS-422 data formats are similar, except the RS-422 interface circuits can transmit and receive data at much greater distances than the EIA RS-232-C interface. EIA RS-232-C data integrity is usually guaranteed to approximately 50 ft, while the RS-422 format is usually guaranteed to over 4000 ft. This unit allows devices with the standard RS-232-C data format to take advantage of the greater range of the RS-422 format. The 232 - 422 model has two jumper-selectable configuration modes. One is for the connection of RS-422 modem equipment to RS-232-C terminal equipment, and the other is for the connection of RS-232-C modem equipment to RS-422 terminal equipment. Both configurations permit bidirectional data transfer.

e. Prerequisites: Various RS-232-C and RS-422 compatible equipment.

f. Input specifications: Selectable - RS-232-C data format
RS-422 data format

g. Output specifications: Same as input specifications.

h. Interfacing: Adapts RS-232-C modem equipment to RS-422 terminal equipment or adapts RS-422 modem equipment to RS-232-C terminal equipment.

i. Power requirements and recommendations: Voltage - 115/220 VAC.

j. Compatible equipment: Any computer or peripheral with an EIA RS-232-C or RS-422 data port.

k. Software available: Not applicable.

l. Environmental conditions: Not available.

m. Application information: Permits the user to take advantage of the increased transmission distance available using the EIA RS-422 data format for equipment using the standard EIA RS-232-C data format.

n. Comments: None.

IV-13-5. **Type and description: Bus extender, fiber-optic.** This bus extender was designed for UNIBUS and Q-BUS found in Digital Equipment Corporation equipment. It connects UNIBUS to UNIBUS, Q-BUS to Q-BUS, or UNIBUS to Q-BUS at speeds of up to 250 k words/sec and distances of up to 2 km with complete electrical isolation and no EMI.

a. Model: CBE-200 series

b. Manufacturer: Canoga Data Systems
21218 Vanowen Street
Canoga Park, CA 91303
(Phone) (818) 888-2003

c. Pricing: $3,100.00

d. Operation: No external controls.

e. Prerequisites: Two devices with bus slots for either Q-BUS or UNIBUS.

f. Input specifications: Q-BUS or UNIBUS standards.

g. Output specifications: Same as input specifications.

h. Interfacing: SMA type connections with 50-micron silica fiber-optic cable up to 2 km.

i. Power requirements and recommendations: 110 VAC, 60 Hz, less than 100 w.

j. Compatible equipment: Any system using Q-BUS or UNIBUS. Mainly used in Digital Equipment Corporation products.

k. Software available: Not applicable.

l. Environmental conditions: 0 to 50 °C
0 to 90% RH. (noncondensing)

m. Application information: Extends Q-BUS or UNIBUS up to two kilometers with no EMI and complete electrical isolation. The link is excellent for harsh electrical environments. The link can be used for graphics display controllers, remote controllers, or remote equipment with Q-BUS or UNIBUS interfaces.

n. Comments: None.

IV-13-6. **Type and description: Cable adapter, RS-232-C to fiber-optic.** This compact asynchronous modem provides complete electrical isolation with no EMI at distances up to one kilometer and speeds up to 19.2 kbaud.

a. Model: CDS-232

b. Manufacturer: Canoga Data Systems
21218 Vanowen Street
Canoga Park, CA 91303
(Phone) (818) 888-2003

c. Pricing: $145.00

d. Operation: Single switch for DTE or DCE RS-232-C ports.

e. Prerequisites: Two devices with asynchronous RS-232-C ports.

f. Input specifications: RS-232-C standard.

g. Output specifications: RS-232-C standard.

h. Interfacing: SMA type connectors with 50-micron cone silica fiber-optic cable. Distances up to 1 km.

i. Power requirements and recommendations: The units are powered from the RS-232-C ports on pin 9.

j. Compatible equipment: Any device with asynchronous RS-232-C ports.

k. Software available: Not applicable.

l. Environmental conditions: 0 to 50 °C
0 to 95% RH. (noncondensing)

m. Application information: RS-232-C to fiber-optic to RS-232-C adapters are very useful when signals must pass through harsh electrical environments. The fiber-optic link is unaffected by EMI and causes no EMI. The link is good for up to 1 km and 19.2 kbaud, and has complete electrical isolation.

n. Comments: Fiber-optic cable cannot make sharp bends.

IV-13-7. Type and description: **Interface, HP-IL/HP-IB .** The HP 82169A HP-IL/HP-IB interface establishes a communications link between systems using the HP-IL data format and systems using the HP-IB data format. This allows the HP 41, HP 71, and the HP 75 portable computers to operate HP-IB laboratory equipment and to talk directly with HP computers such as the HP series 1000. The interface is packaged in a small, thin box and comes with an AC adapter to supply power.

a. Model: HP 82169A

b. Manufacturer: Hewlett-Packard
1820 Embarcadero Road
Palo Alto, CA 94303
(Phone) (213) 877-1282

c. Pricing: $295.00

d. Operation: The HP-IL/HP-IB interface permits linkage of HP-IL systems with HP-IB systems. It features two flexible modes of operation. In the translator mode, a controller and the devices to be controlled may exist on one or both sides of the interface. In the mailbox

mode, a controller system exists on both sides of the interface. The interface responds to most HP-IL and HP-IB commands.

e. Prerequisites: An HP 41, HP 71, or HP 75 portable computer.

f. Input specifications: Not applicable.

g. Output specifications: Not applicable.

h. Interfacing: The HP 82169A is designed to interface an HP-IL system to an HP-IB system.

i. Power requirements and recommendations: 120 VAC at 60 Hz.

j. Compatible equipment: All HP-IL system and HP-IB systems.

k. Software available: Not applicable.

l. Environmental conditions: This device is designed to operate in a computer room environment.

m. Application information: The HP 82169A expands the HP-IL system control and communication capabilities by allowing them to work with systems using the HP-IB data structure.

n. Comments: None.

IV-13-8. **Type and description: Interface adapter, communication, HP-IL/RS-232-C.** The HP 82164A HP-IL/RS-232-C interface translates Hewlett-Packard interface loop (HP-IL) signals into RS-232-C signals and vice versa. This allows controllers using HP-IL such as HP 41, HP 71, and the HP 75 portable computers to talk to and work with computers, terminals, peripherals, and modems. The interface is packaged in a small, thin box and comes with an HP-IL cable and an AC adapter to supply power.

a. Model: HP 82164A

b. Manufacturer: Hewlett-Packard
1820 Embarcadero Road
Palo Alto, CA 94303
(Phone) (213) 877-1282

c. Pricing: $175.00

d. Operation: The HP 82164A is designed to allow interconnection between HP-IL systems and RS-232-C devices. Information may be sent and received (in true half and full-duplex mode) in EIA RS-232-C compatible voltage levels. To operate, the unit merely has to be connected to the HP-IL device and the RS-232-C device. Software is available from Hewlett-Packard that allows the user to create files that configure the interface protocol setup to match the protocol requirements of the various RS-232-C devices which are to be interfaced.

e. Prerequisites: An HP-IL controller with the appropriate I/O utility software.

f. Input specifications: Not applicable.

g. Output specifications: Not applicable.

h. Interfacing: The HP 82164A is designed to interface an HP-IL controller to an RS-232-C device.

i. Power requirements and recommendations: 120 VAC at 60 Hz.

j. Compatible equipment: The HP 41, HP 71, and the HP 75 portable computers.

k. Software available: Data Communications Pac, I/O ROM, and I/O utilities solution book, all from Hewlett-Packard.

l. Environmental conditions: This device is designed to operate in a computer room environment.

m. Application information: The HP 82164A translates HP-IL signals into RS-232-C signals and vice versa which facilitates interconnection of HP-IL systems with RS-232-C devices.

n. Comments: None.

Data Acquisition Units

IV-14-1. **Type and description:** Octapak. Octapak is a family of data acquisition modules that are compatible with the IBM PC, PC/XT, and Apple II and IIe computers. This system consists of modules that can be located up to 4000 ft from the host computer. The modules interface to a variety of signals including AC and DC voltages/currents, thermocouples, RTDs, and frequencies.

a. Models: OP80 and OP90

b. Manufacturer: Action Instruments, Inc.
8601 Aero Drive
San Diego, CA 92123
(Phone) (619) 279-5726

c. Pricing: Mainframe only: OP80 - $495.00 to $595.00
OP90 - $695.00
Computer Interfaces: OP82 - $250.00 to $450.00

d. Operation: The OP80 is an eight-channel module that accepts plug-in signal conditioning units that interface to various sensors. The OP90 is an eight-channel module that is dedicated to thermocouples; it has eight individually addressable digital outputs.

The OP80 accepts up to eight signal conditioning units that provide inputs of voltage, current, thermocouple, RTD, and frequency. Up to 16 OP80 may be daisy-chained allowing up to 128 channels to be interfaced to the host computer. Communication is achieved via an RS-232-C or RS-422 line. Additionally, the OP80 provides a proportional 0-10 V signal for each channel which can be output to indicators, recorders, etc. These signals provide hookups for remote monitoring devices without requiring additional signal conditioning.

The OP90 accepts up to eight thermocouple inputs, and provides all referencing and cold-junction compensation at screw terminal connectors. This module is compatible with type E, J, K, R, S, T, C, and B thermocouples. Eight independently addressable digital outputs are provided. These outputs can be used in alarm and control applications. The OP90 also has the

capability of allowing up to 16 modules to be daisy-chained providing a total of 128 thermocouple inputs. Data are returned to the host computer via an RS-232-C or RS-422 line.

Both the OP80 and the OP90 provide selectable data transmission rates between 300 and 9600 baud. These modules have 500 V reed relay isolation that provides protection from ground loops and electrical noise that could be picked up on sensor inputs. Figure 40 shows typical configurations for these modules.

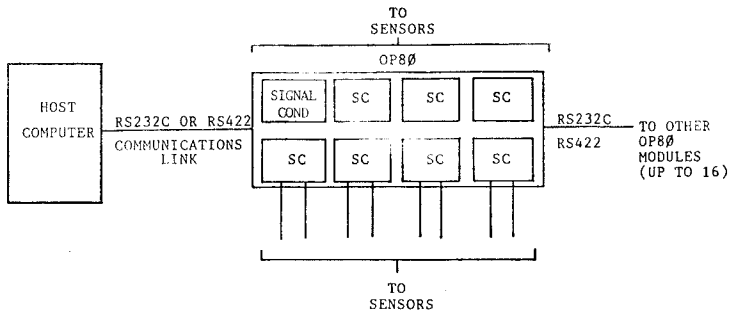

a. OP8Ø Configuration

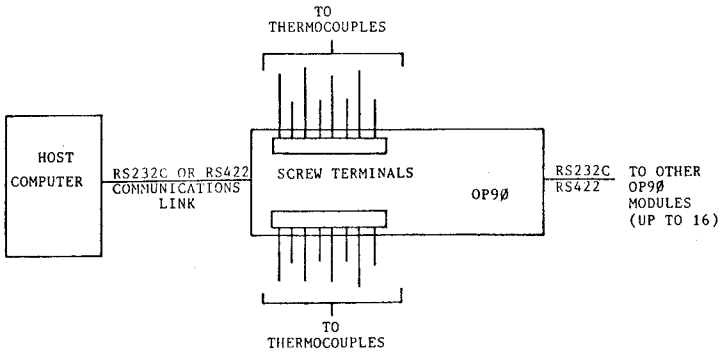

b. OP9Ø Configuration

FIGURE 40. OCTAPAK CONFIGURATIONS

e. <u>Prerequisites</u>: These modules require a host computer; they are compatible with the IBM PC, PC/XT, and the Apple II and IIe computers. The OP80 also requires signal conditioning units. The signal conditioning units are listed in the input specifications.

f. Input specifications:

Model CP80

Input Type	Signal Conditioning Model No.	Range	Resolution
	AP6010-____		
	-1293	0-100mV RMS	25 uV
AC Voltage	-197	0-1 V RMS	250 uV
	-150	0-10 V RMS	2.5 mV
	-143	0-150 V RMS	38 mV
	AP6020-____		
	-132	0-10 mA RMS	2.5 uA
AC Current	-152	0-100mA RMS	25 uA
	-151	0-500mA RMS	125 uA
	-117	0-1 A	250 uA
	AP4100-____		
	-1392	J 0-500 °C	.12 °C
	-1242	J 0-1000 °F	.25 °F
Thermocouple	-143	K 0-1000 °C	.25 °C
	-108	K 0-2000 °F	.5 °F
	-173	T 0-250 °C	.06 °C
	AP4001-____		
RTD	-1371	0-100 °C	.03 °C
3-wire	-1272	0-500 °C	.12 °C
100 ohm PT	-1339	0-200 °F	.05 °F
alpha = .00385	-1323	0-1000 °F	.25 °F
	AP7010-____		
	-115	0-500 Hz	.125Hz
Frequency	-102	0-1000Hz	.25 Hz
	-121	0-5 KHz	1.25Hz
	-124	0-10 KHz	2.5 Hz
	AP4010-____		
	-1225	0-50 mV	12.5uV
DC Voltage	-134	0-100mV	25 uV
	-172	0-1 V	250 uV
	-1223	0-5 V	1.25mV

Model OP90

Type	Range	Type	Range
J	-210 to 350 °C	E	-270 to 1000 °C
J	-210 to 760 °C	R	-50 to 1768 °C
J+	-210 to 1200 °C	S	-50 to 1768 °C
K	-270 to 350 °C	C	-20 to 2320 °C
K	-270 to 1372 °C	B	0 to 1820 °C
T	-270 to 400 °C		

g. Output specifications:

Model	Analog	Digital
OP80	0-10 V/channel	None
OP90	None	8-TTL level

h. Interfacing: These modules interface via RS-232-C or RS-422. An optional RS-232-C/RS-422 converter (OP82-4) can be purchased.

i. Power requirements and recommendations: 120, 220, 240 VAC at 48 to 400 Hz.

j. Compatible equipment: IBM PC or PC/XT and Apple II or IIe.

k. Software available: Octasoft is an optional application software package to use with the Octapak modules. Octasoft menu-driven programs run in background to main programs and add data logging, chart recording, and alarm annunciation capabilities to the host computer. The software provides linearization of thermocouples and RTDs as well as rate, differential, and hi-low limit alarms. Refer to the report on "Available Data Collection and Reduction Software", Report #3, para. V-1-30.

l. Environmental conditions: Operating temperature: 0 to 60 °C. Storage temperature: -25 to 85 °C. Relative humidity (operating): 5 to 90% RH. noncondensing.

m. Application information: The Octapak system is a very versatile system. It is easy to configure a tailored system to meet various data gathering requirements. The Octasoft application software is user-friendly; it provides many features needed for data acquisition.

n. Comments: None.

IV-14-2. Type and description: **Data acquisition and control system.** Netpac is a distributed data acquisition and control network that uses remote modules to measure, linearize, and transmit input signals to a central host computer.

a. Model: 43000 and 84000 series

b. Manufacturer: Acurex Corporation, Autodata Division
555 Clyde Ave., P.O. Box 7555
Mountain View, CA 94039
Phone: (415) 964-3200

c. Pricing: $2000.00 to $20,000.00, depending upon options selected

d. Operation: Netpac modules accept multiple channels of input from thermocouples, process currents, RTDs, high or low voltage signals, pulses, contacts, vibrating wires, and Carlson and weir gages. Output modules are available to provide control of equipment using remote relays. Modules are configured for single and multipurpose input or output. Single purpose modules include a control card, and a card pair for the specified input or output. Multimodules include up to one analog control card, one digital control card, and six connector slots for input or output card pairs. Two of the card slots are dedicated, one for a digital card pair, and one for an analog card pair.

Transducers are wired directly to Netpac modules requiring no signal conditioning. Up to 16 Netpac modules may be connected on a single multidrop bus using a single twisted pair wire for all communications to a centralized host computer. Data are transmitted to the host computer using EIA RS-422 voltage levels at rates up to 19.2 kbaud in ASCII-based code. Transmission distances vary from 2000 ft at 19.2 kbaud to 500 ft at 1.2 kbaud.

e. Prerequisites: Requires an EIA RS-422-compatible host computer, or an EIA RS-232-C-compatible host computer with the optional RS-232-C to RS-422 interface (model 43195). Older model Acurex Autodata Ten series data loggers require an interface card (43105). However, new Ten series data loggers do not require this interface card.

f. Input specifications:

Type	Specification
Voltage	±55 mV, ±100 mV, ±1 V, ±10 V
Current	0 - 1 mA, 4-20 mA, 10-50 mA
Thermocouple	J, K, T, R, S, E, B (cold junction compensation & linearization included)
Dry contact status	Open, closed
RTD	100-ohm platinum, 100-ohm copper
High voltage	0 to ±150 VDC
Pulse counting	0 to 65,000 counts
Vibrating wire	500-2500 Hz, 40 usec-2 usec

g. Output specifications: Contact out 2 A @ 26 VDC, 1 A @ 120 VAC.

h. Interfacing: Uses EIA RS-422 voltage levels. Optional interfaces are available such as EIA RS-232-C/422 converters.

i. Power requirements and recommendations: 12 VDC, 24 VDC, 115 VAC, or 230 VAC.

Voltage, current, thermocouple, dry contact status, RTD, high voltage, or contact output modules:	11 w, maximum
Pulse-counting module:	14 w, for 10 channels
Vibrating wire module:	8 w, maximum

j. Compatible equipment: Acurex Autodata Ten series data loggers; Acurex Autograph, AutoCalc, and AutoLink.

k. Software available: FORTRAN software package for DEC host computer systems. ONSPEC software with drivers for the IBM PC. (Refer to "Available Data Collection and Reduction Software", Report 3., para. V-1-30.)

l. Environmental conditions:

Temperature:	0 to 60 °C
Humidity:	0 to 95% RH. (noncondensing)

m. Application information: Netpac is used to monitor dams, retaining walls, wells, embankments, bridge foundations, oil rigs, as well as industrial processes.

n. Comments: Netpac networks are used in a wide variety of environments. Enclosure options include open frame, 19-inch rack mount, NEMA 2, and NEMA 4. System throughput rates vary from 49 channels/sec to 100 channels/sec. Throughput rates depend on host computer speed and baud rate, as well as number of modules and mode of scanning. The Carlson and weir gage modules

are not a standard product of Acurex. However, Acurex has provided these modules on a customized basis. For further details on these modules, contact Acurex Autodata division.

IV-14-3. Type and description: **Data Acquisition Unit.** This system is a modular, plug-together automatic measurement and control system. The system is based on a building block family of programmable interfaces built on plug-in function card modules. These modules are housed in a rack mountable card cage that is interfaced to a system controller, i.e., computer, calculator. The 53A series of card cages hold and power up to 10 function modules, while the 63A series of card cages hold and power up to five function modules. The CDS system is programmable in BASIC and FORTRAN.

a. Model: Series 53A and 63A, configurations IBX, PCX, RSX, HAX, CCS, and MPX

b. Manufacturer: Colorado Data Systems, Inc.
3301 W. Hampden Ave., Unit C
Englewood, CO 80110
(Phone) (303) 762-1640

c. Pricing:
Mainframes:

Configuration/Series	53A	63A
IBX	$2395.00	$1995.00
PCX	$2895.00	$2495.00
RSX	$2395.00	$1995.00
HAX	$2795.00	$2395.00
CCX	$2395.00	$1995.00
MPX	$3495.00	$3095.00

Modules: $500.00 to $2000.00
Firmware: (MPX BASIC) $300.00
(PCX) $150.00

d. Operation: The CDS system is available in several configurations. Each configuration is available in either the 53A or 63A card cages. The following table lists each configuration; figure 41 shows configuration concepts.

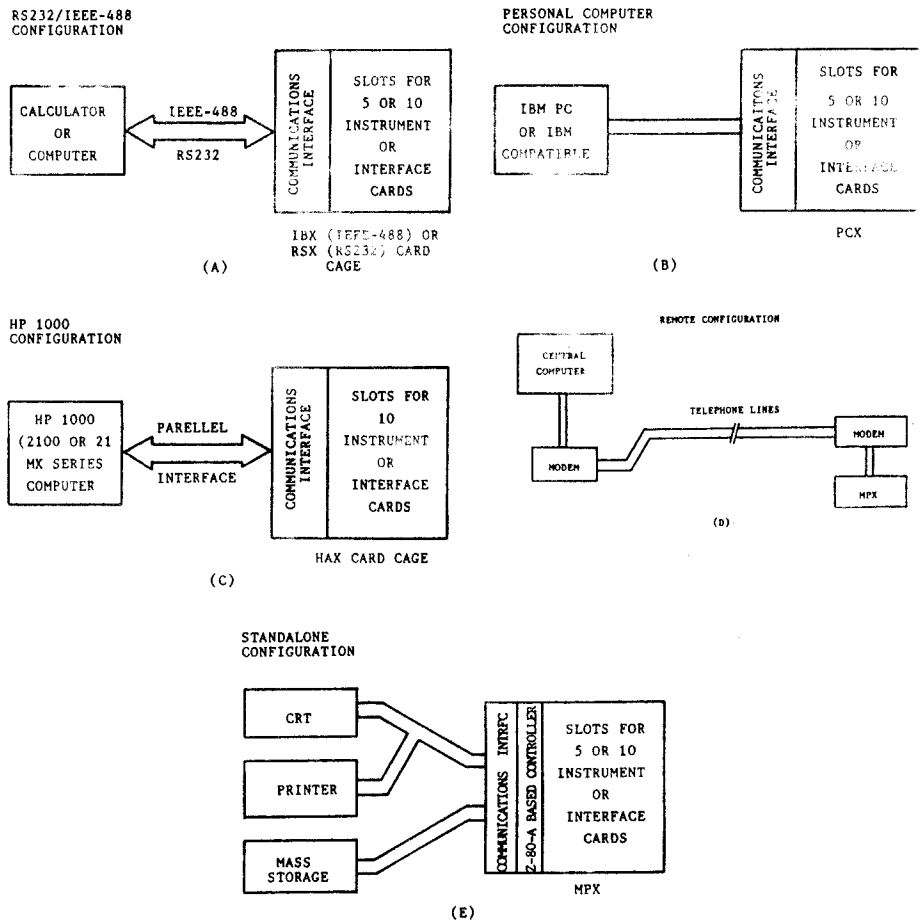

FIGURE 41. SERIES 53A AND 63A DATA ACQUISITION SYSTEM

CONFIGURATION	COMMENTS
IBX	Facilitates direct connection to any system controller that provides an IEEE-488 I/O port
PCX	Allows direct connection to IBM or IBM-compatible personal computer to be used as the system controller.
RSX	Provides hard-wired connection to any system controller that provides an RS-232-C I/O port. Note: This configuration is not suitable for use with modems. If modems are required, use MPX configuration.

HAX	Allows direct connection to an HP 1000 series computer to be used as the system controller.
CCX	Provides for chaining of 2 through 10 additional card cages to any system configuration.
MPX	A stand-lone configuration that may also operate as a remote unit in a distributed system using RS-232-C communications.

A customized data acquisition system may be tailored using the above configurations and a mixture of the versatile function modules. Modules are available for digital-to-analog conversions (53A-257), analog isolation and amplification (53A-283), digital multimeter (53A-522), programmable gain amplifier (53A-284), strain gage amplifier (53A-220), analog-to-digital conversion (53A-518), data acquisition system (53A-519), thermocouple input (53A-225), event sensing (53A-509), relay scanning (53A-331, 4-wire; 53A-332, 2-wire), programmable resistance (53A-342), as well as others.

The modules provide interfacing to various types of transducers allowing for a versatile and easily upgraded system. The thermocouple module accepts 10 channels of input with isothermally protected ice point compensation and linearity correction for types S, R, B, V, K, T, and E. Two types of relay scanning modules are available, one providing ten 4-wire input points, the other providing twenty 2-wire input points. The strain gage module provides four channels of amplification with nine switch-selectable gain settings from 100 to 2500 times for each channel. The data acquisition subsystem is a high speed A/D with an analog input multiplexer and on-board memory for storing voltage or temperature measurement data allowing the controller to handle other tasks. These modules simply plug into the CDS system card cage.

The CDS system may operate as a stand-alone unit (MPX configuration), or be controlled by a Hewlett-Packard 1000 series computer (HAX configuration), IBM personal computer (PCX configuration), RS-232-C-compatible computer (RSX configuration), or IEEE-488-compatible computer (IBX configuration). The system

accepts ASCII-coded commands from the controlling unit and carries out the indicated function via the card cage bus.

e. Prerequisites: Depends on system configuration. See table in OPERATION section for requirements of each configuration.

f. Input specifications:

MODULE	SPECIFICATIONS
Analog isolator/ amplifier (amp) 53A-283	±10 V ±150 Vrms maximum
Digital multimeter 53A-522	Ranges: DC voltages - 20 mV, 2 V, 200 V, and 700 V. AC voltages- 200 mV, 2 V, 20 V, 200 V, and 700 V.
Programmable gain amplifier 53A-284	Programmed by ASCII characters ±700 Vrms maximum 15 readings/second
Strain gage amplifier 53A-220	4 channels total - any combination of full, 1/2, or 1/4 bridge circuits.
A/D converter 53A-518	Ranges: ±9.995 V, ±0.9995 V, ±0.09995 V 500 K conversions/second (maximum)
Thermocouple 53A-225	Types: J, K, E, T, R, S, B

g. Output specifications:

MODULE	SPECIFICATIONS
D/A stimulus 53A-257	Range: ±9.99 V in 10-mV steps 100 mA at 10 V (without limiting resistor)
Analog isolator/amp 53A-283	Range: ±10 VDC single channel ±60 VDC multiple channels cascaded 20 mA at 10 V

Programmable gain amp 53A-284	Range:	±50 VDC single-ended 30 mA at 50 V
Strain gage amp 53A-220	Range:	±10 VDC per channel ±4 mA per channel

h. Interfacing: The CDS system may be configured to interface to controllers via RS-232-C or IEEE-488 depending on hardware selected.

i. Power requirements and recommendations: This unit provides a switch for selecting either 105 to 132 VAC or 210 to 265 VAC as input power. The unit operates on frequencies of 47 to 63 Hz. Maximum power consumption is 500 VA.

j. Compatible equipment: This system is compatible with any RS-232-C or IEEE-488 compatible equipment (i.e., computers, printers), as well as the IBM personal computer and Hewlett-Packard Series 1000 computers. Compatibility depends on configuration purchased.

k. Software available: CDS provides optional firmware (53A-181) on a set of 2716 EPROMS that plug into the chain card (53A-142) to provide a BASIC language interpreter. This firmware also contains many EXECUTIVE commands allowing control computers to download BASIC programs to a remote MPX system.

l. Environmental conditions:
Temperature - 0 to 50 °C (operating)
-40 to 70 °C (storage)

Humidity - 0 to 90%, RH. (noncondensing)

m. Application information: The CDS system is a versatile system that is adaptable to many applications. Specialized modules provide for system flexibility. Applications include data acquisition and multiplexing, thermocouple and strain gage monitoring, signal monitoring and alarms, and event sensing.

n. Comments: None.

IV-14-4. Type and description: Data acquisition and control system. The Hewlett-Packard 3054A is a computer-based, stand-alone data acquisition and control system. The system is

capable of interfacing 100 channels with expansion modules allowing 1000 channels as the maximum system configuration. Plug-in card cage modules are used to interface to transducers providing system flexibility. The system contains the HP 3497A data acquisition unit (DAU), HP 3456A digital voltmeter (DVM), HP 3437A voltmeter (VM), and a choice of one of five HP computers 85B, 85F, 9816S, 9826S, or 9845T.

a. Model: HP 3054A

b. Manufacturer: Hewlett-Packard
P.O. Box 10301
Palo Alto, CA 94303-0890
(Phone) (415) 857-8000

c. Pricing:

Mainframe	$12,120.00
Extender	$2,025.00
Modules	$530.00 to $990.00

d. Operation: The heart of the HP 3054A system is the HP 3497A data acquisition and control unit. The 3497A is a card cage unit that uses plug-in modules to interface to transducers. Five slots are available for a choice of ten different interface modules. If more than five modules are needed, an expansion chassis (HP 3498A) may be used to provide ten more module slots. A total of thirteen 3498A extenders may be controlled by one 3497A mainframe, providing for channel capacities of 1000 analog and 1360 digital. System timing is accomplished via the nonvolatile real-time clock of the 3497A. The clock provides calendar and time of day for time tagging data, as well as interrupt and elapsed time capabilities. Analog signals are multiplexed to one of two voltmeters, HP 3456A digital voltmeter or HP 3437A system voltmeter.

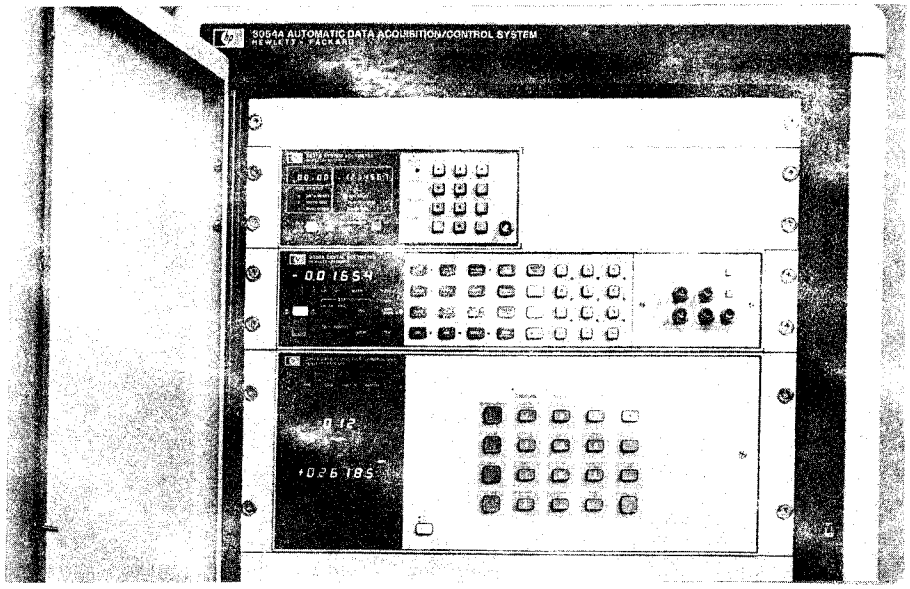

MODEL 3054A (PHOTO COURTESY OF HEWLETT-PACKARD)

The 3456A DVM has high accuracy and high resolution which makes it ideal for measuring low level signals. It is a versatile DVM which offers variable precision, variable acquisition speeds, and noise rejection through integration and guarding. A sensitivity setting of 100 nanovolts can detect small changes in temperature or other parameters, while speeds of 300 channels/second provide for high-speed sampling.

The 3437A system VM is a 3-1/2-digit, high-speed sampling voltmeter. Programmable time delays between voltage readings allow analysis of low frequency transients or high frequency repetitive waveforms.

The 3054A system has several plug-in interface modules providing for a wide variety of digital and analog input and output operations. A 20-channel relay multiplexer (Option 010) with less than 2 mV of thermal offset may be used for multiplexing RTDs. Thermocouples are multiplexed using the 20- channel low thermal relay multiplexer (Option 020). An isothermal connector acts as the reference junction for the thermocouple inputs. Sixteen channels of isolated digital input (Option 050) are provided for sensing switch closures or checking position indicators. Logic levels of 5 V, 12 V, or 24 V may be selected. Low frequency electronic signals may be measured using the 100-kHz reciprocal counter module (Option 060). All counter functions, interrupts, and trigger modes are

fully programmable. Up to 10 strain gages may be measured using the strain gage/bridge completion module (Options 070 and 071). Termination for 1/4-, 1/2-, and full-bridge circuits is provided. A dual output D/A converter (Option 130) has a programmable current output of 0 to 20 mA with 12-bit resolution.

e. Prerequisites: Hewlett-Packard computer models HP 85B, HP 85F, and the entire HP 9000 series.

The HP 85B features 32 kbytes of read-write memory, integrated 5 in. CRT, integrated 32-character thermal printer, and HP-IB interface. Data may be stored on a tape cartridge using the single tape cartridge drive. The 85B uses Enhanced BASIC and can produce graphics on the integrated CRT.

The 85F features 14.6 kbytes of read-write memory, integrated 5-in. CRT, integrated 32-character thermal printer, HP-IB interface card, and single tape cartridge drive. A memory expansion module (82903A) expands the memory to 30.7 kbytes. Data may be stored on a tape cartridge. The 85F uses Enhanced BASIC and can produce graphics on the CRT.

The 9816S is a desktop computer with 512 kbytes of read-write memory and RAM-based BASIC 2.0. Other features include HP-IB and RS-232-C interfaces, and 9-in. CRT. The CRT provides 400 x 300 graphics resolution.

The 9826S features include 64 kbytes of RAM expandable to 1.3 Mbytes, Enhanced BASIC, HPL or Pascal languages, and a full graphics CRT. A built-in floppy disk drive is also provided for fast data access. An external printer may be used for obtaining hard copies of data.

The 9845T features 187 kbytes of RAM expandable to 449 kbytes, 80-character thermal printer, and a 12-in. CRT with full graphics capabilities. A single tape cartridge drive provides for storage of data on tape cartridges. More than 200 kbytes of data may be stored on one cartridge.

f. Input specifications:

Relay Mux Option 010 -	Contact ratings 170 V, 50 mA Input voltage ±170 V peak Thermal offset less than 2 uV Series resistance 100 ohms

Relay Mux Option 020 -	Contact ratings 170 V, 50 mA Input voltage ±170 V peak Thermocouples B,E,J,K,R,S,T
Digital Input Option 050 -	Input level 5 V, 12 V, and 24 V Input current 400 uA, 1 mA, and 2 mA (minimum)
100-kHz Counter Option 060 -	Input level 5 V, 12 V, and 24 V Input voltage ±12 V, ±21 V, and ±32 V (maximum) Input current 30 uA, 250 uA, and 750 uA (minimum) Input frequency 100 kHz (maximum)
Strain Gage Option 070 and 071 -	Resistance 120 ohm (Option 070) 350 ohm (Option 071) Configuration 1/4-, 1/2-, or full-bridge

g. Output specifications:

D/A Converter Option 130 -	Resolution - 12 bits Ranges 0 - 20 mA 4 - 20 mA Least significant bit - 5 uA (0 - 20 mA) 4 uA (4 - 20 mA)

h. Interfacing: CPUs may be configured for HP-IB or RS-232-C communications.

i. Power requirements and recommendations: Selectable option for 100, 120, 220, or 240 VAC at 50 or 60 Hz.

j. Compatible equipment: Hewlett-Packard computer models 85B, 85F, and the entire HP 9000 series. (Refer to para. IV-2-15)

k. Software available: The software available to support the 3054A system is dependent upon the CPU chosen. The CPUs support Enhanced BASIC or high-level programming language (HPL). HPL is a formula-oriented language which is most effective for data acquisition programs. The Enhanced BASIC is a superset of standard ANSI BASIC with many features of FORTRAN (i.e., IF-THEN). The system software contains subprograms that may be combined to perform complex tasks. Typical subprograms set up the instrument, close a channel, initiate a

reading, analyze the reading, and return the reading to system memory. (See "Available Data Collection and Reduction Software", Report 3. para. V-1-8.)

l. Environmental conditions:
Temperature: 0 to 50 °C (operating)
Humidity: to 95% RH at 40 °C (operating)

m. Application information: With the available CPU options, this system may be used as a small localized system or a large centralized system. Expansion modules provide for system growth and easy reconfiguration.

n. Comments: Different rack configurations are available to make it easy to work with available space. Rack options include a 30 in. tall rack, a 56 in tall rack, a desk with 23 in of rack space, and a 16 in. tall combining case.

IV-14-5. Type and description: **Data acquisition and control package, PC instruments.** The Hewlett-Packard PC instruments system links test and measurement instrumentation to personal computers. PC instruments consist of eight advanced instrumentation modules including relay multiplexer, digital multimeters, digital I/O, analog output, function generator, universal counter, digitizing oscilloscope, and relay actuator. Each separate, stackable module is located outside the PC and modules may be added according to needs.

a. Model: HP 61086AA, Data Logging Package (HP 150)
HP 61087AA, Data Logging Package (IBM PC)
HP 61088AA, Electronic Bench Package (HP 150)
HP 61089AA, Electronic Bench Package (IBM PC)

b. Manufacturer: Hewlett-Packard, Portable Computer Div.
1000 N.E. Circle Blvd.
Corvallis, OR 97330
(Phone) (800) 367-4772

c. Pricing: Data Logging Package - $1,600.00
Electronic Bench Package - $6,600.00

d. Operation: PC Instruments system software makes it easy to use the system in both a manual and a

programmed mode. For manual mode operation, the soft front panel duplicates the instrument control panels of traditional instruments on a CRT screen. By simply touching the HP Touchscreen or using a mouse with the IBM PC, functions may be set, as well as ranges and values, and measurements may be taken.

Because PC instruments are programmed in Microsoft BASIC, it is easy to customize or develop application programs. A few easy-to-remember commands, like OUTPUT and MEASURE, control PC instruments, and the soft front panel may be used to enter many of the instrument parameters that are traditionally typed into the system.

An add-on HP-IB command library may also turn a PC into a versatile HP-IB instrument controller that controls both PC instruments and HP-IB programs from the same BASIC program. Optional data acquisition software provides simple menu-driven programs for voltage scanning, temperature measurement, and graphics.

e. Prerequisites: An IBM or HP 150 personal computer with 640 kbytes of RAM.

f. Input specifications:

Analog: Scan rate - 2.5 or 12.5 readings/sec
DC volts - 200 mV to 200 V, 0.01 mV resolution; 0.05% accuracy
Ohms - 200 ohms to 20 Mohms;0.01-ohm resolution; 0.1% accuracy
Impedance - 10 Mohm

Digital: Volts - TTL (±10 V max.)
Data - 16 input bits

Frequency: Limits - 10 Hz to 10 MHz
Sensitivity - 40 mV rms
Impedance - 1 Mohm
Gate time - 0.1 to 10 sec

g. Output specifications:

Analog: Voltage: -10 V to +10 V with 5.0 mV resolution
-5 V to +5 V with 2.5 mV resolution
-1 V to +1 V with 5.0 mV resolution
Ripple: 3 mV peak-to-peak

Digital: Voltage: TTL or open collector
Data: 16 bits
Control: 2 bits

Frequency: Functions: Sine wave, square wave, triangle wave, ramps and pulses.
Amplitude: 8 mV to 10 V peak-to-peak
Frequency: 10 Hz to 5 MHz

h. Interfacing: HP 61060AA interface for the HP 150 PC. HP 61061AA interface for the IBM PC. Both are $500.00.

i. Power requirements and recommendations: 120 VAC, ±12.5%, 57-63 Hz. 25 VA max for each instrument.

j. Compatible equipment: IBM PC and HP 150 personal computers.

k. Software available: HP 14855AA (HP 150) and HP 14856AA (IBM PC) data acquisition software packages. (Refer to "Available Data Collection and Reduction Software", Report 3. para. V-1-10.)

l. Environmental conditions: Operating temperature: 0 to 40 °C. Humidity: less than 80% RH.
Note: Accuracy of the analog measurement is degraded slightly with wide variations in temperature.

m. Application information: Ideally suited for low-point-count data acquisition that requires voltage, frequency, and ohms measurements. It may be configured and programmed to read resistance of Carlson gages and frequency of vibrating wire gages including plucking the wire by a digital output unit.

n. Comments: The data acquisition program formats and converts acquired data into a form compatible with many third-party software packages such as Lotus 1-2-3.

IV-14-6. **Type and description: Data acquisition unit, portable.** The Hewlett-Packard 3421A data acquisition unit is capable of scanning 30 channels of differential inputs or 56 channels of single-ended inputs. Typical inputs include DC and AC voltages, 2- and 4-wire resistances, frequency, and temperature. Standard features include an HP-IL interface, a 5-

1/2-digit integrating multimeter, and an internal buffer capable of storing 30 readings.

a. Model: HP 3421A

b. Manufacturer: Hewlett-Packard
P.O. Box 10301
Palo Alto, CA 94303-0890
(Phone) (415) 857-8000

c. Pricing: $1,500.00 to $5,000.00, depending on options

d. Operation: The HP 3421A may be controlled by either the HP 41CV hand-held calculator, the HP 85 desktop computer, the HP 150 Touchscreen, or the IBM PC. All calibration constants are stored in internal memory protected by a 10-year lithium battery, thereby eliminating the need for manual calibration. Input modules are available to interface to RTDs, thermocouples, thermistors, AC and DC voltages, and resistances. The mainframe can house three input modules.

Adding the HP 41CV calculator option greatly enhances the flexibility of the HP 3421A. This option includes the HP 41CV calculator, HP 44468A data acquisition pac, HP 82160A HP-IL interface module, and the HP 82182A time module. The data acquisition pac provides for linearization of thermistors, RTDs, and thermocouples (T,J,K,E,R,S), as well as increased system programmability. Also part of the HP 44468A pac are two keypad overlays for the HP 41CV. One overlay allows "Front Panel" functions (i.e., continuous display of a channel of data), while the other provides "Data Logger" functions (i.e., scanning a sequence of channels at specified time intervals).

Other options include a digital cassette drive (model HP 82161A), a thermal printer (model HP 82162A), 12-VDC power from a battery or automobile cigarette lighter (option #212), and rugged carrying case (model HP 11341A/B). The cassette drive provides storage area for 131 kbytes of data, and the thermal printer may be used as a printer or plotter. The 12-VDC power option makes this a truly portable system capable of performing like a larger and more expensive data acquisition system.

e. Prerequisites: Controller either HP-IL (HP 41CV or HP 85A) or IEEE-488 (HP 9816A computer) compatible.

f. Input specifications: Voltage ranges: ±0.3 V, ±3.0 V, ±30 V, ±300 V; Resistance ranges: 300 ohms, 3 k ohms 30 k ohms, 300 k ohms, 3 M ohms, and 30 M ohms. Thermocouples: T,J,K,E,R,S. Frequency ranges: 1 Hz to 10 kHz, 10 Hz to 10 kHz. Current range: 4 to 20 mA (with shunt resistor). RTDs: 100-ohm platinum.

g. Output specifications: Maximum current = 0.3 A
Maximum voltage = ±350 V peak

h. Interfacing: IEEE-488 or HP-IL.

i. Power requirements and recommendations: 100, 120, 220, or 240 VAC @ 50 or 60 Hz. Optional 12 VDC battery is also available.

j. Compatible equipment: HP 41CV calculator, HP 85A computer, HP 9816A computer, HP 82161A digital cassette drive, HP 82162 thermal printer, HP 150 and the IBM PC.

k. Software available: Data acquisition pac - ROM module for the HP 41CV calculator. DARAD 200 (refer to "Available Data Collection and Reduction Software", Report 3., para. V-1-8).

l. Environmental conditions: Temperature: 0-55 °C
Humidity: 0 to 85% RH.

m. Application information: The HP 3421A is used to monitor flowmeter performance, temperature, galvanic effects, water levels, etc.

n. Comments: None.

IV-14-7. **Type and description: Expansion board, multi-function, I/O.** This is a multifunction analog/digital I/O expansion board for the IBM PC. It is designed to allow use of the IBM PC/XT/AT and compatibles in low speed, high resolution data acquisition.

a. Model: DASCON-1

b. Manufacturer: MetraByte Corporation
254 Tosca Drive
Stoughton, MA 02072
(Phone) (617) 344-1990

c. Pricing:

Plug-in board	$495.00
Screen terminal option	$109.00
Instrumentation amp	$25.00
Analog output channel	$35.00

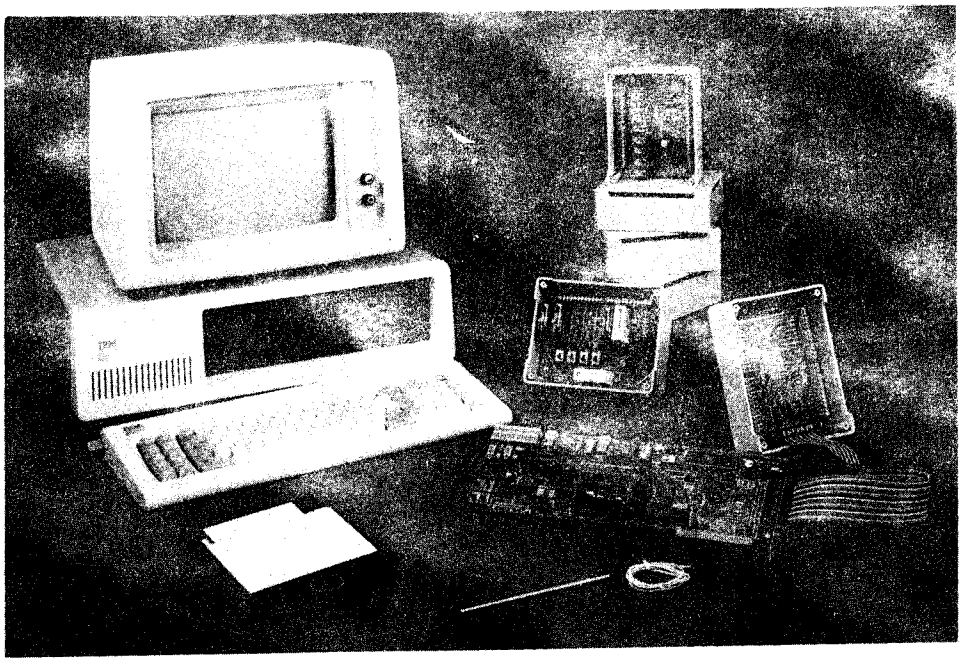

DASCON-1 (PHOTO COURTESY OF METRABYTE CORP.)

d. Operation: The DASCON-1 is a single board system that plugs into an expansion slot in the IBM PC. The board provides twelve bits of digital I/O, four analog channels with switchable filters, two switch-selectable RTD interfaces, two analog output channels (optional), two precision adjustable voltage references, and two precision 1 mA constant current sources. Sixteen consecutive I/O address locations are required for the DASCON-1. The address may be set by using the base address DIP switches on-board. Switch-selectable addressing allows the use of several DASCON-1 models in a single IBM PC.

Four channels of differential analog inputs are provided on the DASCON-1. Amplifier gain on the analog inputs is 1. However, optional instrumentation amplifiers may be added to channels 0 and 1. The instrumentation amplifiers provide gains of 10, 100, and 1000 that are switch-selectable. These gains scale inputs from thermocouples, strain gages, etc. The remaining analog input channels, 2 and 3, are

switch-selectable for direct connection with 2-, 3-, or 4-wire RTDs. All analog input channels have switchable filters that can provide an additional 30 dB of attenuation. These filters can be engaged on any channel and any input configuration without interfering with other channels.

There are two optional channels of 12-bit D/A output available. The output ranges of ±10 V, ±5 V, ±2.5 V, +10 V, and +5 V are switch-selectable. Two precision adjustable voltage reference outputs are standard. Each voltage output may be adjusted between ±6.8 V at 5 mA. The voltage references may be used for excitation of strain gages. Two precision current sources are also standard with this unit. These sources provide 1 mA (-10 to +2.5 V) for excitation of RTDs, etc.

Twelve bits of digital I/O are provided. The 12 bits are configured in two ports, one 8-bit port and one 4-bit port. Each port may be independently programmed as an input or output.

All I/O connections are made via a 37-pin "D" type connector located on the rear panel of the IBM PC. However, an optional screw terminal board is available allowing transducers to be directly wired to the screen terminals. This board also contains a small bread board area for user custom circuits as well as +5 V power and 12 LED for monitoring digital I/O lines.

e. Prerequisites: IBM PC/XT/AT or compatible.

f. Input specifications:
Analog - ±2.0475 V (full scale)
±2 V CMR
12-bit A/D resolution at 0.5 mV/bit

RTD - 100-ohm platinum, 2-, 3-, or 4-wire

g. Output specifications:
Voltage source: ±6.8 V at 5 mA
Current source: 1 mA

h. Interfacing: The DASCON-1 board plugs into an expansion slot in the IBM PC.

i. Power requirements and recommendations: The DASCON-1 is powered by the IBM PC. The power loads are as follows: +5 V supply, 450 mA (typ)/600 mA (max)
-5 V supply, 8 mA (typ)/15 mA (max)
+12 V supply, 70 mA (typ)/100 mA (max)
-12 V supply, 60 mA (typ)/100 mA (max)

j. Compatible equipment: IBM PC/XT/AT and compatibles.

k. Software available: MetraByte software is included in the purchase price of the DASCON-1. The software includes utility programs for installation assistance, graphics, a polynomial approximation to linearize most transducers (RTDs, thermocouples, etc.), and step-by-step calibration/setup procedures.

l. Environmental conditions:
Temperature: 0 to 50 °C (operating)
Humidity: 0 to 90% RH. (noncondensing)

m. Application information: The DASCON-1 may be used for data logging of strain gage inputs, pressure measurements, flow measurements, thermocouple inputs, and resistance measurements.

n. Comments: None.

IV-14-8. Type and description: **Interface, A/D, data acquisition system, 16-channel, high-speed.** The MetraByte DASH-16 is a multifunctional high-speed analog/digital I/O expansion board for the IBM personal computers. It is a full-length board that installs internally in an expansion slot of an IBM PC or PC XT and turns the computer into a high precision data acquisition and signal analysis instrument. The interface features a 12-bit A/D converter that can sample either 16 single-ended or eight differential analog signals and transfer the converted data into the computer memory for processing. The interface also has two D/A converters that allow the user to output to analog voltages for process control or similar applications. Also four digital inputs and four digital outputs are provided for status and digital control applications. MetraByte also supplies a utility software package with the interface that handles all the machine

protocol to operate the interface along with routines to aid in transducer linearization, graphics for display of processed data, calibration, and initial setup.

a. Model: DASH-16

b. Manufacturer: MetraByte Corporation
254 Tosca Drive
Stoughton, MA 02072
(Phone) (617) 344-1990

c. Pricing: $895.00

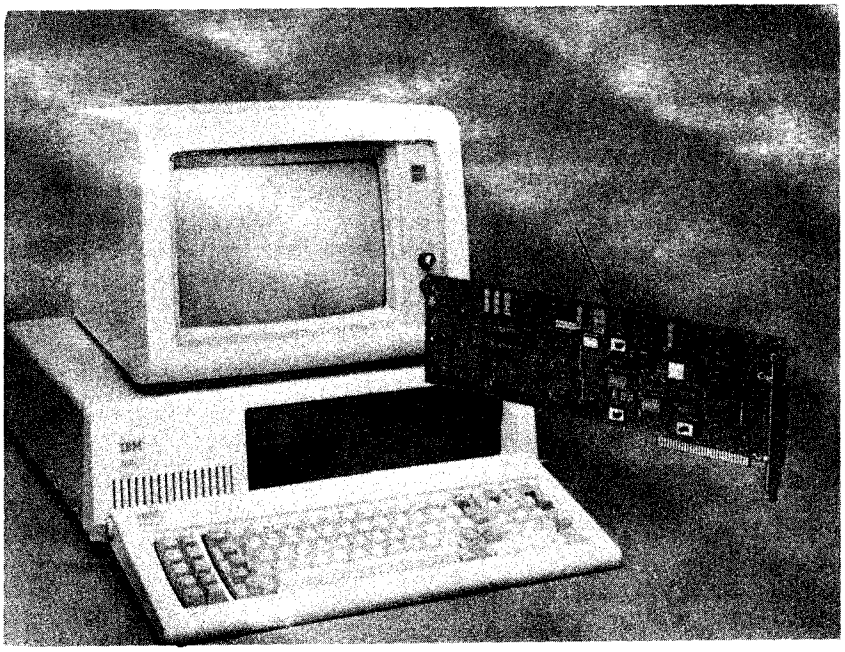

DASH-16 (PHOTO COURTESY OF METRABYTE CORP.)

d. Operation: The DASH-16 uses an industry standard 12-bit successive approximation converter with a 25-usec conversion time. The channel configuration may be selected on the board to provide either 16 single ended or 8 differential analog channels.

Throughput depends on the operation configuration:

OPERATING MODE	THROUGHPUT (CONVERSION/ SEC)
Program transfer to simple variable	Up to 200
Program transfer to array variable	Up to 4000
Interrupt driven transfer	Up to 4000
DMA transfer on scan of channels	Up to 25000
DMA transfer on single channel	Up to 35000

The A/D conversion of a channel may be initiated by either a software command, an internal programmable interval timer, or an external signal. Selection of the channel to be digitized and the rate of digitization is handled by the software package supplied by MetraByte. Data obtained from the digitization may be transferred to CPU memory either by program control, interrupt, or direct memory access (DMA). The programmable interval timer that can provide a trigger for the A/D converter operates at any rate from 250 kHz to 1 pulse/hr. The two D/A converters on the board can provide a 0 to +5 V signal when a fixed -5 V reference from the interface board is used. Alternatively, an external DC or AC reference may be used to give different output ranges or programmable attenuator action on an AC signal. Digital I/O consists of four bits of TTL/DTL compatible digital output and four bits of digital input that may be addressed as individual I/O ports.

e. Prerequisites: An IBM PC on PC XT with a disk drive and PC-DOS 1.10 or DOS 2.0.

f. Input specifications:

ANALOG INPUTS

Switch-selectable:	16 single-ended or 8 differential
Converter type:	12-bit successive approximation
Conversion time:	25 usec
Accuracy:	0.01% of reading ±1 bit
Full scale:	±10 V
Coding:	Offset binary
Maximum over-voltage:	To ±30 V
Input current:	100 mA max at 25 °C.
Temp. coef.:	Gain or FS, ±25 ppm/°C, max. zero ±10 uV/°C. max.

g. Output specifications:

ANALOG OUTPUT:	2 12-bit multiplying D/A (unipolar)
Voltage ranges:	0 to +5 V with reference supply (+10 V with external reference)
Maximum load current:	5 mA

h. Interfacing: This unit is designed to interface with the IBM PC XT bus.

i. Power requirements and recommendations: Power is supplied by computer.

j. Compatible equipment: The DASH-16 is designed to work with the IBM PC or PC XT. Bus-compatible computers such as Compaq, KAYPRO, or the Zenith 150 may be used.

k. Software available: The following utility software for DASH-16 is provided on a single-sided PC-DOS 1.10 format 5-1/4-in. floppy disk (upward compatible with DOS 2.0):

1. A machine language driver (DAS16.BIN) for control of A/D, D/A, and digital I/O channel functions and data transfer modes via BASIC CALL

2. Programmable interval timer - setting pulse rate

3. Initial setup and installation aids

4. Graphic display of data versus time and x/y mode

5. Calibration and test programs

6. Examples and demonstration programs

l. Environmental conditions:

Operating temperature:	0 to 50 °C
Storage temperature:	-20 to 70 °C
Humidity:	0 to 90% RH. (noncondensing)

m. Application information: The DASH-16 gives the IBM PC or PC XT an internal data acquisition and control capability. For low-speed applications, this interface along with 4-wire transducer transmitters (described in Hardwire Transmission section paras. IV-18-1 thru IV-18-7) can collect data from standard transducers such

as strain gages, RTDs, thermocouples, and transducers using the wiper of a potentiometer to produce its data signal.

n. Comments: None.

IV-14-9. Type and Description: **Data acquisition system.** The Neff model 470 is a personal computer-based data acquisition system using dedicated I/O cards to accommodate analog and digital signal inputs and to provide signal conditioning for input transducers.

a. Model: 470

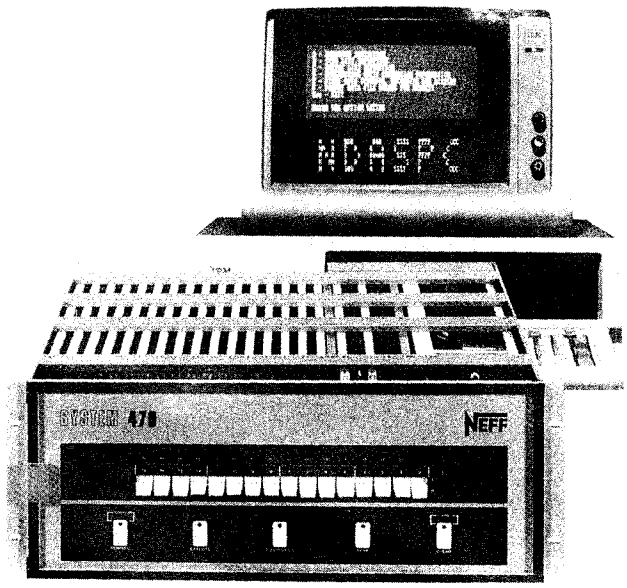

SYSTEM 470 DATA ACQUISITION (PHOTO COURTESY OF NEFF CORPORATION)

b. Manufacturer: Neff Instrument Corporation
700 S. Myrtle Ave.
Monrovia, CA 91016
Phone: (213) 357-2281

c. Pricing: $5,000.00 to $20,000.00, depending on options

d. Operation: System 470 interfaces to either IEEE-488 or EIA RS-232-C-compatible computers, depending on the option purchased, and consists of a 7 in. X 19 in. rack mount enclosure with power supply, I/O control logic

card, analog subassembly card, and 16 I/O slots that accept any combination of specialized I/O cards. A control/display panel is optional, and an expansion assembly is available to extend I/O to 32 slots. Up to 1024 data inputs are supported, depending on type and number of I/O cards. Available I/O cards are listed below:

Description	Model	Comments
16-channel differential mux	470050	Options for open source detection (470051), 4-20 mA (470052), and isothermal connector (470081)
4-channel high CMV amplifier/ mux	470053	Selectable gains 1 or 64. Optional isothermal connector (470081) allows direct thermocouple connections.
4-channel bridge conditioner/ mux	470054	One, two, and four active arms. Contains 5-V excitation supply.
4-channel RTD conditioner/mux	470055	2-,3-,and 4-wire 100 RTDs, or current-excited 4-wire RTDs up to 1 k
32-bit TTL input	470010	Hold feature freezes input levels.
16-point isolated AC/DC input	470011	Input voltages 12 to 48 V accordingly
2-channel frequency or period input	470012	Maximum frequency 100 kHz, 200 mV to 100 V
32-point TTL output	470030	Internal pull-up resistor and 5 V supply
2-channel, 16-bit DC output	470070	Output voltage + 10.24 V 20 mA
8-point form C relay output	470031	3-wire outputs (N.O.,N.C.,common)

The System 470 microprocessor enhances the host computer data I/O capability by using large block transfers of data and performing real-time tasks of addressing channels, setting gains, and time keeping. The microprocessor repeatedly executes a downloaded scan list and contains the address and gains of desired input points in the order in which they are to be read. Scan lists may be up to 1024 addresses in length, yet

any number of scans, up to a total of 2048 readings, may be used.

When a data buffer is filled, the System 470 signals the host and begins filling a second buffer. The host can transfer the data from the first buffer at any time before the completion of the second buffer, or it may choose to ignore this buffer and allow it to be overwritten. All data buffers are time-tagged to retain time integrity, even when buffers are overwritten. A single buffer mode allows the System 470 to fill a single buffer, then wait for the host to read the buffer and request a new buffer be taken.

Scan rates are programmed or allowed to free-run at the System 470 maximum rate. Output lists are block transferred to the System 470 from the host, and executed when the current input scan is complete. The output lists define control functions to be output by the System 470. A new output list can be transferred to the System 470 at any time.

e. Prerequisites: IEEE-488 or EIA RS-232-C-compatible personal computer, minicomputer, or calculator.

f. Input specifications:

Model	Specifications
470050	±5 mV, ±10 mV, ±20 mV, ±40 mV, ±80 mV, ±160 mV, ±320 mV, ±640 mV, ±1.28 V, ±2.56 V, ±5.12 V, and ±10.24 V; CMR = 80 dB to 120 dB; CMV ±10 V
470053	Input impedence = 10 M ohms, CMV = +300 V CMV = 102 dB to 138 dB
470054	Excitation voltage = 5 V ±10 mV Line and load regulation = 0.01% or 200 mV, whichever is greater.
470055	100-ohm RTDs or 4-wire RTDs to 1 k ohm
470011	Input voltage levels 12 to 48 V accordingly
470012	0 to 327 kHz; 0 to 327 msec; 0 to 32767 counts

g. Output specifications:

Model	Specifications
470030	Sink current = 40 mA
470070	Output voltage + 10.24 V @ 20 mA
470031	Contact rating 8 A @ 250 VAC

h. Interfacing: IEEE-488 or EIA RS-232-C, depending on option purchased.

i. Power requirements and recommendations: 117 VAC.

j. Compatible equipment: IBM PC XT or any IEEE-488 or EIA RS-232-C-compatible computer.

k. Software available: NDAS-PC (Refer to "Available Data Collection and Reduction Software", Report 3., para. V-1-29) is menu-driven data acquisition software compatible with IBM PC XT. It is written in BASIC and runs under PC DOS V-2.1. This software performs conversion factors on linear and quadratic expressions and thermocouples E, J, K, R, S and T. NDAS-PC provides for porting recorded data to analysis packages such as Lotus 1-2-3 and Symphony.

l. Environmental conditions: 0 to 55 ^{o}C, operating temperature; 90% RH. noncondensing, operating humidity.

m. Application information: System 470 is designed for use as a front end for personal computer data acquisition systems.

n. Comments: None.

IV-14-10. Type and description: **Data acquisition system, isolated measuring pods.** The Solartron 3595 is a distributed data acquisition system designed for use in harsh environments. The system consists of isolated measuring pods (IMP) that are IBM PC compatible. The IMPs are connected to the IBM PC via a multidrop loop.

a. Models: 35951A, B, and C; 35952A; 35954A

b. Manufacturer: Solartron Instruments
2 Westchester Plaza
Elmsford, NY 10523
(Phone) (914) 592-9168

c. Pricing: 35951A - $1,500.00
35951B - $1,350.00
35951C - $1,600.00
35952A - $1,500.00
35954A - $990.00

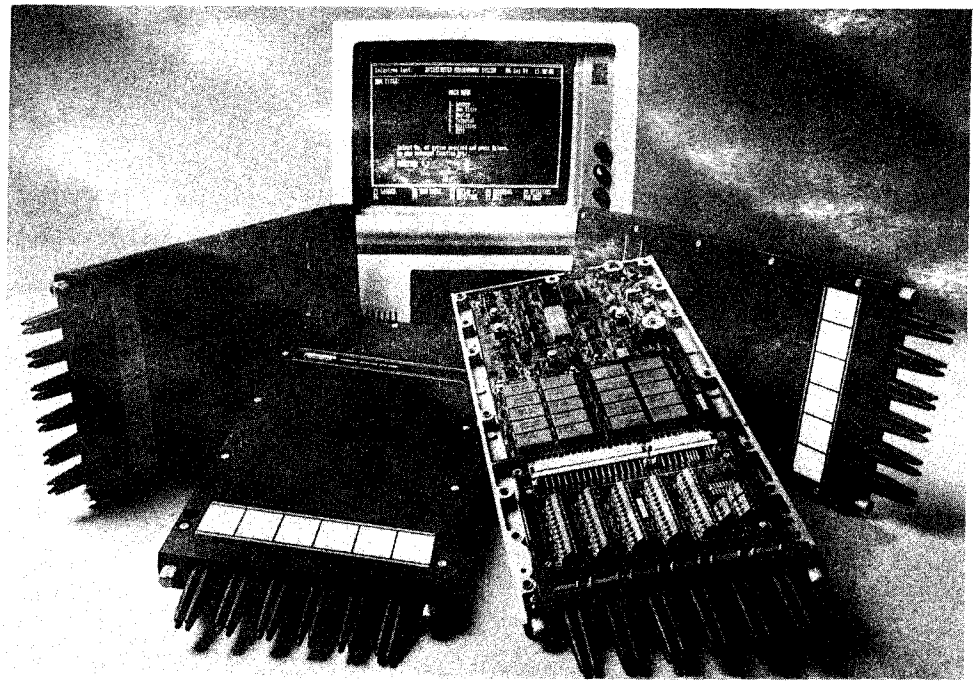

35951A,B,C ISOLATED MEASURING PODS (PHOTO COURTESY OF SOLARTRON)

d. Operation: The IMP network is interfaced to the IBM PC (fully compatible with XT and AT versions) through a single adapter card (35954A), which plugs into an expansion slot within the PC. The adapter card features an on-board microprocessor that controls all network functions. A local dual-port memory handles all data from the IMP network. The dual-port memory is accessed directly by the PC, allowing rapid execution of application software.

Four types of IMPs provide for measurement of an array of inputs including DC voltage and current, RTDs, thermocouples, strain gages, status, frequency, period, and counts. Digital outputs are also available. Results of IMP measurements are converted to engineering units before being transmitted to the IBM

PC. Each IMP is equipped with a detachable connector block to simplify installation.

IMPs 35951A and 35951C both provide twenty channels of three-pole switching providing measurement of thermocouples, voltages, and currents. Switching is accomplished by CMOS FETs in the 35951A and by reed relays in the 35951C. Cold junction compensation is automatically calculated by the on-board microprocessor when thermocouples are measured. Terminals within the connector block may be used as the cold junction, but an external cold junction could be used. The 35951A has a maximum input voltage of ±12 V, but the 35951C has a maximum input voltage of ±120 V when an optional connector (35953D) is used.

Voltage, resistance, strain gages, and RTDs are measured using the 35951B. Ten channels of six pole switching are provided. Excitation current is provided for platinum RTDs and full-, 1/2-, or 1/4-bridge strain gages. Installation of 1/4-bridge strain gages is greatly simplified by the use of the shared dummy housed within the connector block.

Twenty channels of digital I/O (individually selectable as input or outputs) are provided on the 35952A. Digital inputs include status, frequency, period, counts, or events. Digital outputs can drive TTL circuits, indicators, relays, etc.

Power for up to five IMPs may be drawn from the adapter card housed within the IBM PC. However, a network can contain as many as 30 IMPs. Additional DC power for large networks may be applied at the PC or directly at the IMP.

An application software package (35955A) is available and designed for use with an IBM PC having 256 kbytes or more of RAM. The software supports up to 30 IMPs. User-keyboard interaction is by soft-key menu selection and requires no special knowledge of the PC.

e. Prerequisites: IBM PC or PC compatible computer. External power supply of 10 to 50 VDC if more than 5 IMPs are used in one system.

f. Input specifications:

Module 35951A:	Voltage	1 uV to 12 VDC
	Current	10 nA to 20 mA DC
	Thermocouples	E, J, K, T, R, and S

Module 35951B:	Voltage	1 uV to 2 VDC
	Resistance	2 m ohm to 2.5 k ohm (4-terminal)
	RTD	100 ohms platinum
	Strain	1/4-, 1/2-, full-bridge
Module 35951C:	Voltage	10 uV-120 VDC (with optional 35953D connector)
	Current	10 nA to 20 mA
	Thermocouples	E, J, K, T, R, and S
Module 35952A:	Resolution	(Event) 10 msec (Period) 10 usec
	Frequency	0.1 Hz to 10 kHz

g. Output specifications:

Module 35951B:	Sensor excitation 0.8 or 4 mA
Module 35952A:	Voltage 40 VDC (maximum) Current 100 mA (maximum sink)

h. Interfacing: The IMP network interfaces to the IBM PC via a two-wire multidrop loop. The network is controlled through an adapter card that plugs into the IBM PC.

i. Power requirements and recommendations: Up to 5 IMP modules may be powered via the adapter card plugged into the IBM PC. Additional modules require external power at 10 to 50 VDC. Power consumption is less than one watt for each module.

j. Compatible equipment: IBM PC or PC compatible computers.

k. Software Available: An application software package (35955A) is designed for use with an IBM PC having at least 256 kbytes of memory. Main features include operation with color or monochrome displays, individual channel configuration, time interval logging from 5 seconds to 1 day, data replay to screen or printer, and data conversion to DBASE.

l. Environmental conditions:

Temperature:	-20 to 70 ^{o}C (operating)
Humidity:	(at 40 ^{o}C) to 95% RH. (noncondensing)

m. Application information: The Solartron 3595 system is easily configured to suit all types of transducers and applications such as stress analysis, flow measurement, and temperature measurement.

n. Comments: None.

IV-14-11. **Type and description: Data acquisition system, Quantrol hardware.** This is a modular system with several specialized interfacing modules that plug into a rack-mountable crate. The crate provides the interconnecting bus for transferring data. The system has controllers that interface to DEC PDP-11, PDP-11/03, LSI-11/2 and 23 computers, as well as stand-alone system, RS-232-C, or 20-mA current loop configurations.

a. Model: Quantrol computer automated measurement and control system

b. Manufacturer: DSP Technology
48500 Kato Road
Fremont, CA 94538
(415) 657-7555

c. Pricing: $8000.00 to $30,000.00 depending on configuration and options

d. Operation: The Quantrol system hardware is modular in design. A full array of modules is available including A/D and D/A converters, digital I/O modules, thermocouple modules, RTD modules, and strain gage modules. The modules may be mixed to provide a versatile data acquisition system. Since the modules plug into a rack-mounted crate, the system may be easily expanded and upgraded.

Crate controllers are available to interface the Quantrol system hardware to various DEC computers and create stand-alone systems. The following figure shows typical configurations. Controller model DCC-11 interfaces the Quantrol hardware to the DEC PDP-11 computer and Unibus system. Any number of crates may be attached to the system, but each crate must have its own DCC-11 controller. Another system configuration uses the CC-LSI-11 controller to interface any number of crates (each with its own controller) to a Q bus

system with DEC PDP-11/03, and LSI-11/2 and 23 as system host computers. The Quantrol system also functions as a stand-alone data acquisition unit using the MIK 11/2 model controller. The MIK-11/2 controller uses the DEC LSI-11/23 microprocessor as the heart of the controller. A serial RS-232-C communications link is provided for connecting the MIK-11/2 controller to a terminal for programming and control.

A versatile data acquisition system may be constructed using any of the above configurations and the specialized sensor interface modules in the Quantrol series. The model E230 module is an RTD conditioner multiplexer that has eight channels and provides signal conditioning for 2-, 3-, and 4-wire RTD inputs. The model E210 is a high-speed multiplexer that provides 16 differential input channels designed for use with the E200, and E205 A/D converters as well as the E480 strain gage termination panel. The model E220 is a differential reed-relay multiplexer that also interfaces to models E200, E205 and E480. The E200 A/D converter has 12-bit resolution and three input voltage levels of ±10.24 V, ±5.12 V and ±2.56 V with switchable gains of 1, 2, or 4. The E205 A/D converter is the same as the E200 except it has 16-bit resolution. The strain-gage termination panel, model E480, accepts eight strain gages with 1, 2, or 4 active arms per gage. The E480 also provides separate constant current excitation source for each gage. A voltage/current D/A converter, E260, is also available. The E260 is switch-selectable to +5.12 V or +10.24 V, full scale, with currents of 20.48mA or 51.2mA, respectively. The E240 is a low-level reed-relay multiplexer that provides 16 differential channels. The E240 is used with the E200 and E205 A/D converters to provide input ranges of ±81.92 mV, ±40.86 mV and ±20.48 mV, ranges typically output by thermocouples, RTDs, and strain gages. Transducer excitation is provided via 400 series terminator panels.

e. Prerequisites: Depends on system configuration. A host computer is required to program and control the various crate controllers.

f. Input specifications:

A/D converters (E200 and E205)	Ranges:	±10.24 V, ±5.12 V, and ±2.56 V, full scale
	Resolutions:	5 mV, 2.5 mV, and 1.25 mV, respectively

a

RTD conditioner (E230): 2-, 3-, or 4-wire RTDs
Thermocouples: J, K, T, R, S, E, and B

g. Output specifications:
D/A converters (E260): +5.12 V @ 20.48 mA
+10.24 V @ 51.2 mA
Strain gage excitation: ±2.5 to ±5.0 V (adjustable via trimpot)

h. Interfacing: Unibus, Q-bus, RS-232-C, or IEEE-488

i. Power requirements and recommendations: 100, 115, or 230 VAC at 50-60 Hz

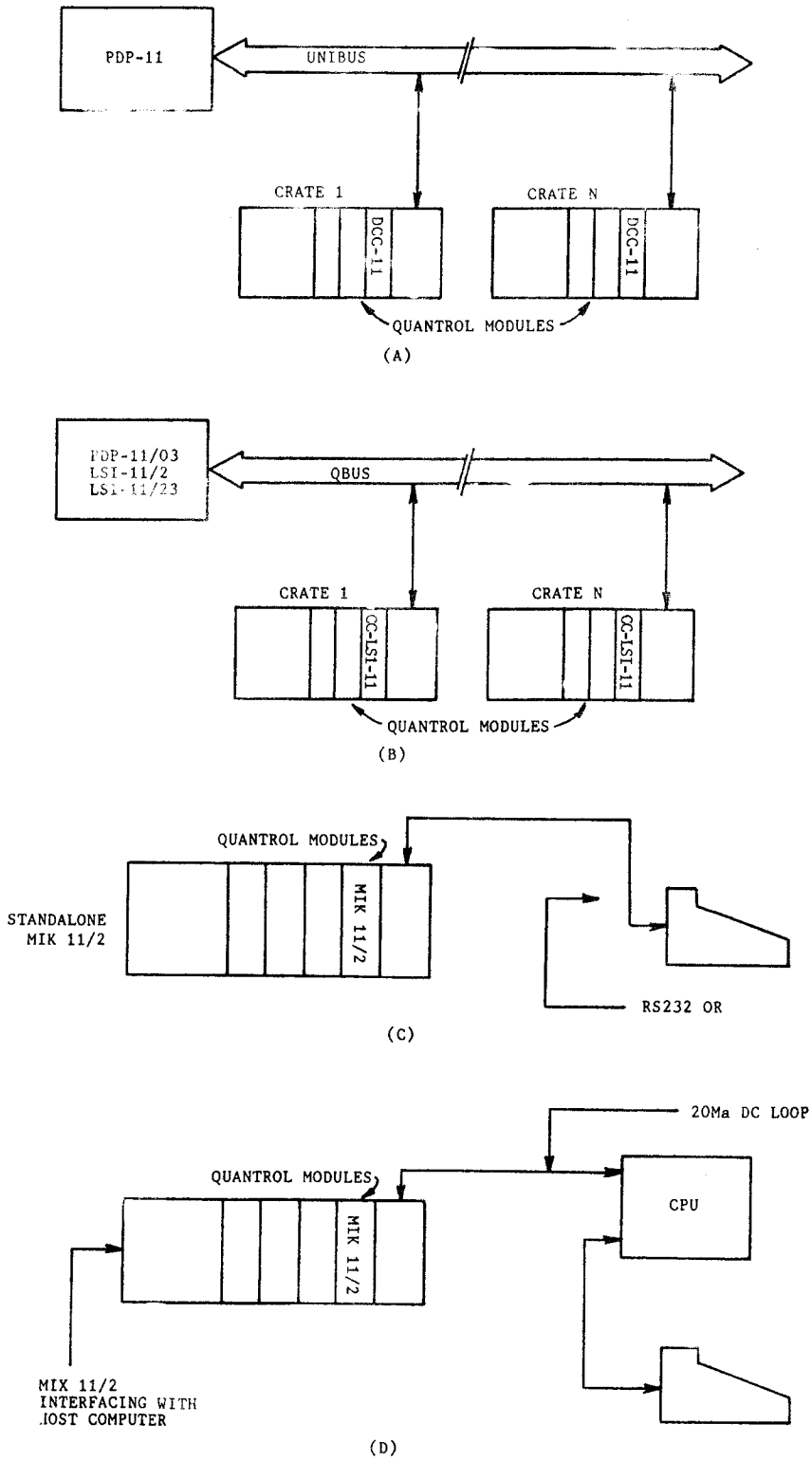

FIGURE 42. QUANTROL AUTOMATED MEASUREMENT CONTROL SYSTEM

j. Compatible equipment: DEC PDP-11, PDP-11/03, LSI-11/2, and LSI-11/23. Also compatible to RS-232-C, IEEE-488, and 20-mA current loop equipment.

k. Software available: Quantrol hardware is controlled by a DEC PDP-11 operating system and Standard Engineering Corporation Dynamik software. (Refer to "Available Data Collection and Reduction Software", Report 3., para. V-1-14.)

l. Environmental conditions:

Temperature:	0 to 50 °C (operating)
	-40 to 70 °C (storage)
Humidity:	0 to 80% RH. noncondensing (operating)
	0 to 95% RH. (storage)
Altitude:	up to 10,000 ft (operating)

m. Application information: Quantrol hardware is currently in use in industrial systems (i.e., refining) and laboratory systems.

n. Comments: Weather-tight enclosures must be provided for hardware.

IV-14-12. Type and description: **Data acquisition system and vibrating wire.**

a. Model: CNF-7, type S central control system

b. Manufacturer: Telemac
2 Rue Auguste Thomas
92 500 Asnieres, France
(marketed by)
Roctest, Inc.
7 Pond Street
Plattsburgh, NY 12901
(Phone) (518) 561-3300

c. Pricing: $14,000.00

d. Operation: Telemac instruments or similar vibrating wire and induction monitoring equipment may use this system. The model CNF-7 has 16 analog input ports for Telemac instruments, thermocouples or analog sensors. The acquisition unit based on the Z80 processor converts the gage input signals to the required physical units of pressure, strain, temperature, etc. Gage factors and type are stored for each instrument in user-modifiable memory. The model CNF-7 is software

programmable for individual instrument type and signal processing.

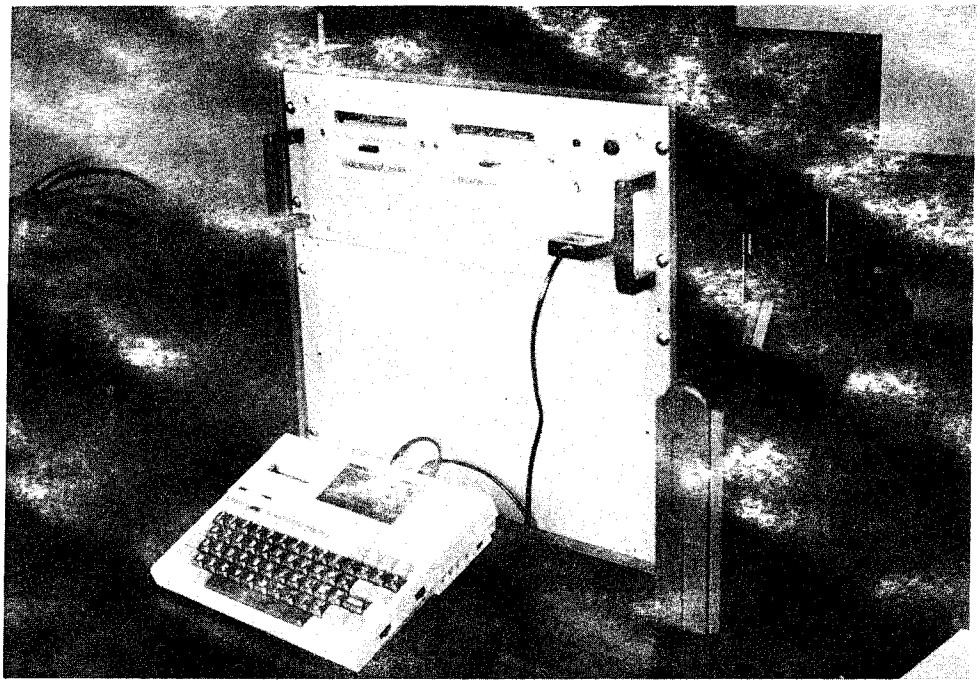

CNF-7 DATA ACQUISITION SYSTEM (PHOTO COURTESY OF TELEMAC)

e. Prerequisites: None.

f. Input specifications: Sixteen analog input ports expandable to 96. Thirty-two extra bits input for digital instruments and on/off instruments.

g. Output specifications: Two EIA RS-232-C serial interfaces; one TTL alarm drive output. Oscilloscope port to display gage signals. Optional: IEEE interface, parallel BCD coded output. Quad analog output to strip chart recorder. Digital output to magnetic tape cartridge recorder to ECMA 34 standard.

h. Interfacing: RS-232-C, Optional IEEE 488, parallel BCD coded output.

i. Power requirements and recommendations: 220 VAC and 12 VDC. Consumption: 3 A @ 5 V, 100 mA @ 12 V, 100 mA @ 15 V.

j. Compatible equipment: EIA RS-232-C serial devices (peripherals). FC-3 DC readout set (para. IV-7-5), MPF1 inclinometer, Nivomatic levelling instrument (para. II-8-2), ST thermometer (para. II-15-8), CL1

pore pressure cell (para. II-10-5), and HCV total pressure cell (para. II-9-5).

k. Software available: Not specified.

l. Environmental conditions: Operating temperature: 0 to 70 °C. Humidity: 70% RH.

m. Application information: Used in civil engineering performance monitoring systems. Water level monitor.

n. Comments: Optional telephone or radio-based remote control. The model CNF-7, type D system is similar to the CNF-7 S, except for the difference in acquisition card and signal processing and measurement by channel.

IV-14-13. **Type and description: Data acquisition modules.** These modules are personal computer compatible input and output modules specifically designed for use in hostile environments. Four different analog input modules measure voltages, strain gages, thermocouples, and RTDs. Other modules support pulse totalizing, digital inputs and outputs, and isolated analog outputs. Each module may be housed in a drip-proof, dust tight, shock and vibration resistant enclosure so it may be located near transducers.

a. Models: PDL-201, 211, 212, 214, 215, 216, 217, and 218

b. Manufacturer: Terra Technology Corporation
3860 148th Ave. N.E.
Redmond, WA 98052
(Phone) (206) 883-7300

c. Pricing: PDL-201, $695.00
211, $995.00
212, $1395.00
214, $995.00
215, $995.00
216, $1395.00
217, $1195.00
218, Not available

d. Operation: The PDL-200 series modules operate under the direct control of a host computer via an RS-232-C communications interface. Each module may be

configured as a board in a sealed plastic case or in a card rack. The sealed plastic case provides a military type connector for the RS-232-C interface and a door for access to the terminal strip where sensor wiring is connected to the module.

There are three possible configurations for a data acquisition system using the PDL-200 series modules. The modules may be used with any RS-232-C-compatible computer, such as the Terra computer 1010 by Terra Technology or IBM personal computer and its compatibles. There are three configurations which are described below. Configuration A uses the three RS-232-C ports of the Terra computer 1010 to interface directly to any three PDL-200 series modules. Configuration B utilizes any RS-232-C-compatible computer (Terra computer 1010 or IBM PC compatible shown) and the PDL-201 multiplexer to interface to any eight PDL-200 series modules. Configuration C uses the three RS-232-C ports of the Terra computer 1010 and three PDL-201 multiplexers to interface to 24 PDL-200 series modules. These configurations may be varied to suit the system needs, such as adding a printer, etc.

The PDL-200 series includes various models each designed to perform a specific function. The table below lists the model numbers and gives a description of the various models function.

MODEL	DESCRIPTION
PDL-201 multiplexer	Multiplexes up to eight modules to a single output
PDL-211 vehicle test module	Designed for in-vehicle field. Performs thermocouple and analog voltage measurements, and pulse totalizing. Sixteen analog channels, two pulse inputs. Cold junction temperature sensing provided.
PDL-212 four-wire analog input module	Provides direct measurement of 100 ohm RTDs, strain gages, and resistance bridges as well as voltage and current inputs. Eight 4-wire channels, each may be excited via a constant current source and shunt resistors may provide a constant voltage source.

PDL-214 four-channel pulse counter	Counts pulse accumulation from flowmeters, frequency transmitters, etc. Overflow indication may provide service interrupt to host computer.

MODEL	DESCRIPTION
PDL-215 digital I/O module	Provides 16 TTL I/O lines and four latched relay outputs. Relay outputs may switch low power loads, i.e., alarms, solenoids.
PDL-216 analog output module	Provides 2 channels of 12-bit resolution current or voltage outputs. Specifies bipolar, unipolar, or current outputs.
PDL-217 strain gage module	Provides eight 4-pole channels with cold junction temperature sensing for strain gage measurement.
PDL-218 isolated analog input module	Provides direct measurement of thermocouples, low-level DC voltages and currents. Sixteen channels with cold junction temperature sensing.

All modules are controlled by the host computer. Transducer data are input to the host computer via an RS-232-C interface. The Terra computer 1010 is designed specifically for use with the PDL-200 series modules. The rugged construction of the 1010 and the PDL-200 series modules provides for a portable data acquisition system that may be transported to transducer locations for taking data. The 1010 outputs control commands to the various modules and receives the transducer data and stores them in an internal bubble memory for later evaluation.

e. Prerequisites: PDL-200 series modules require an RS-232-C-compatible computer for control and data storage. The modules also require an external power supply of 8 to 35 VDC. Power regulation is provided within each module.

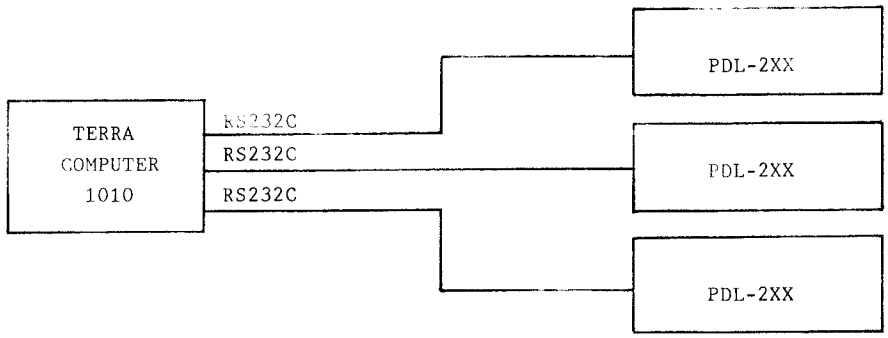

CONFIGURATION A

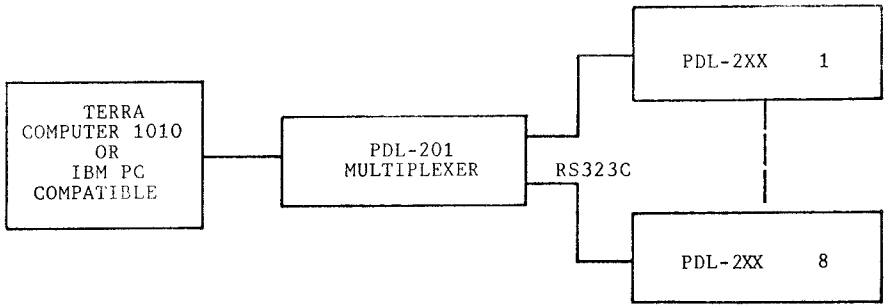

CONFIGURATION B

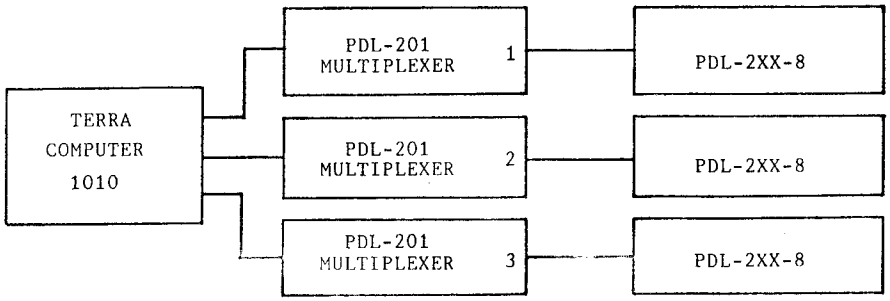

CONFIGURATION C

FIGURE 43. 1010 CONFIGURATION GUIDE

f. Input specifications:
Analog inputs (211, 212, 217, and 218):
Ranges ±100 mV, ±1 V, ±10 V CMV 25 VDC max (except 218, 170 VDC max)
Resolution 1:20,000 full scale (except 212, 1:4096 (12 bits))

Digital inputs (215): Voltage level 1.5 to 20 VDC

Pulse inputs (214): Counts 10^5
Frequency 0 to 5 kHz
Voltage level 1.5 to 20 VDC

g. Output specifications:
Analog outputs (216): Current ±130 mA into 75 ohm maximum
Voltage ±15 VDC at 130 mA

Output to sensors (212 and 217):
Constant current ±80 mA (212)
±100 mA (217)
Constant voltage ±10 VDC (217)

Digital output (215): 5 VDC, 25 mA (internal supply) up to 20 VDC, 100 mA (external supply)

h. Interfacing: RS-232-C.

i. Power requirements and recommendations: PDL-200 series modules require an external supply at 8 to 35 VDC with current up to 140 mA (at 8 VDC).

j. Compatible equipment: Terra computer 1010, IBM PC and PC compatibles, and any RS-232-C-compatible computers.

k. Software available: See Terra computer 1010 (para. IV-2-23).

l. Environmental conditions:
Temperature: -20 to 60 °C (operating)
-40 to 80 °C (storage)
Humidity: 5 to 95% RH. (noncondensing)
Shock: 1 m. drop all sides

m. Application information: The PDL-200 series modules and the Terra computer 1010 form a rugged and portable data acquisition. Compact size and rugged construction allow the system to be transported to remote transducer sites for acquiring data.

n. Comments: None.

IV-14-14. Type and description: **REMAC 3100**. This is a complete supervisory control and data acquisition system designed for remote, in the field applications. The system consists of a Remote Telemetry Unit (RTU), a Master Telemetry Unit (MTU), and optionally a Remote Repeater Unit (RRU). The RTU measures data inputs such as digital, analog, and frequency, and outputs commands to external control units. The MTU can be configured as a stand-alone computer or as an interface device between the RTU and a host computer. The RRU may be installed to extend radio communications over long distances.

a. Model: REMAC 3100

b. Manufacturer: Automated Controls, Inc.
12260 Pennsylvania St.
Denver, CO 80241
(Phone) (800) 624-7739

c. Pricing: RTU with UHF or VHF radio: $2,765.00
System (RTU, MTU, solar panel, antenna, and enclosures): $4,200.00

d. Operation: Each RTU operates as an independent controller. A control computer serves as the data collection point, it is not required to supervise the operation of the RTUs. The RTU measures data from analog, digital, and frequency inputs, and processes the data according to parameters set up by the system software. Commands can be output to external control devices from the RTU as well. An RTU can interface to 16 digital inputs (expandable to 64), 8 digital outputs (expandable to 32), 16 single-ended/8 differential analog inputs (expandable to 48/24), and 6 frequency inputs.

System communications between the RTUs and the central computer are accomplished via a two-way VHF or UHF radio installed as an integral part of the RTU. Other communication options include a combination of radio, telephone, hardline, satellite, and microwave communications channels.

An MTU receives the communications from the RTU. The MTU may function as a stand-alone computer or it

may interface between the RTU and the central computer. Acting as a front-end communications processor, the MTU relieves much of the duties of the central computer, thereby simplifying the installation when interfacing to an existing computer. The MTU is designed using the STD-BUS format allowing easy expansion.

The RTU is used to extend communications distances when required by terrain, radio parameters, or environmental conditions.

A typical system installation is shown in Figure 44. The RTU is located in a six-inch diameter PVC pipe, buried in the ground below the frost line to avoid extreme temperature variations. The tophole enclosure is mounted on top of the PVC pipe above ground level. All interfacing and interconnections are made in the tophole enclosure. Conduit is used to enclose all system wiring to transducers and the communications antenna. A solar panel is used to provide power to the battery that powers the RTU.

Figure 45 shows a system configuration. This configuration uses the RRU and also shows direct communication between the MTU and RTU.

e. Prerequisites: This system may function as a stand-alone system, or it may use a host computer as a central data collection point.

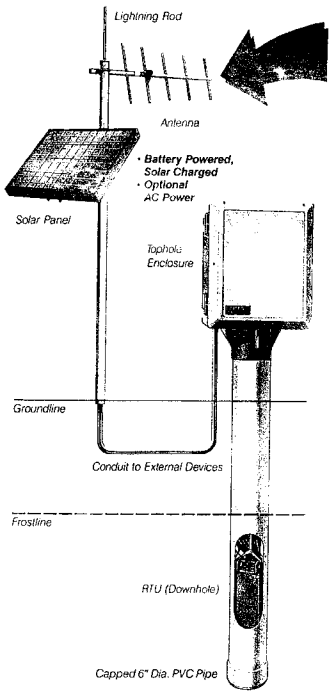

FIGURE 44. REMAC SYSTEM INSTALLATION

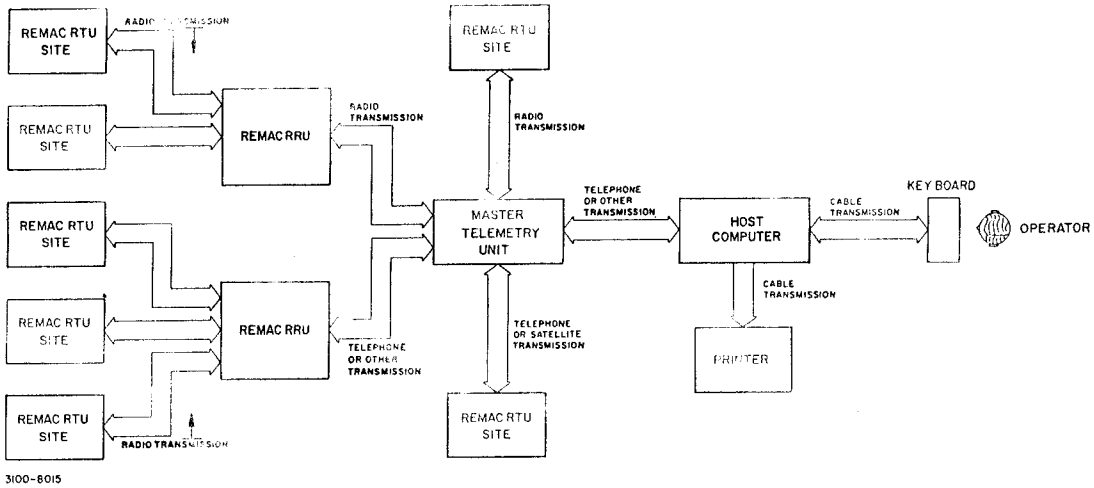

FIGURE 45. REMAC SYSTEM CONFIGURATION

f. Input specifications:

Digital: Contact sensing active low.

Analog: 4-20 mA, 10-50 mA (single-ended)
0-6 kHz @ 20 mV, 0-15 kHz @ 50 mV (differential or frequency)

A/D: 8 bits standard with options for 10 or 12 bits.

g. Output specifications: Digital: Form C relay contacts 5 A at 125 V.

h. Interfacing: Communications are established via VHF or UHF radio bands. Options are available for EHF, telephone, hardline, satellite, and microwave communications, as well as for RS-232-C ports. Modem port operates at 300 baud, half or full duplex or 1200 baud, half duplex. User defined non-standard frequency-shift keyed formats are possible. RS-232-C port operates at 19.6 kbaud maximum with full handshake capabilities.

i. Power requirements and recommendations:

Input voltage from battery: 12 VDC
Input power: 3.8 W (avg. operating)
10.2 W (avg. transmitting)
Battery type: 12 V, 55 AH (higher capacities available)
Solar Charging rate: 2.0 A (avg.) at 1 sun.
AC power with battery backup is optional.

j. Compatible equipment: The REMAC system is designed for use with the IBM PC/XT as the central computer.

k. Software available: RBASIC and RMOS are optionally available software packages. RMOS is used by the RTU to perform data collection and calculations. RBASIC is used by the IBM PC/XT to present data in report form and provide user interface to the RTU.

l. Environmental conditions: Temperature: -40 to 75 ^{o}C. Humidity: 5 to 95% RH. noncondensing.

m. Application information: The REMAC system is very useful in remote site applications where digital, analog, or frequency data is required. The systems radio transmission capabilities and solar panel recharging of batteries allow the remote sites to operate unattended.

n. Comments: Over 5,000 of these systems are in operation from northern Canada to southern Texas. Software is being developed for operation under the Unix system for the AT&T personal computer.

Data Loggers

IV-15-1. **Type and Description. Data logger, Acurex Autodata Ten series.** These data loggers are complete, menu-driven data acquisition systems with full mathematics capabilities (algebraic, logorithmic, exponential, and trigonometric functions). They are capable of monitoring and controlling up to 1000 channels of 2-wire input data, and storing 300 kbytes of data using the internal cassette tape.

a. Model: Autodata Ten/30, Autodata Ten/50

b. Manufacturer: Acurex Corporation, Autodata Division
555 Clyde Ave., P.O. Box 7555
Mountain View, CA 94039
Phone: (415) 964-3200)

c. Pricing: Ten/30 $9,950.00, main frame only
Ten/50 $14,800.00, main frame only

d. Operation: The Autodata Ten series data loggers are menu-driven. Selection of programming steps is achieved by inserting a response into the proper position on the CRT display. This is accomplished by using the front panel key pad on the Ten/30, and the detachable keyboard or front panel function keys on the Ten/50. An internal tape drive allows for convenient program loading and nonvolatile data storage on a DC-100 cartridge. A front panel key lock prevents unauthorized programming or system shutoff.

Autodata Ten series data loggers are capable of monitoring 120 channels (expandable to 1000 channels) of 2-wire, or 60 channels (expandable to 500 channels) of 3- or 5-wire input data. The data may be transmitted to any EIA RS-232-C-compatible peripheral for printout, storage, etc. A mixture of various types of signals may be input to the data loggers via specialized input cards. These cards are capable of accepting analog signals (voltage, current), contact closures, pulse inputs, BCD inputs, and calculated channel values (i.e., resistance). The model 1016 remote scanner (optional) allows input from transducers located up to 5000 feet from the data logger. Each remote scanner provides up to 100 3-wire channels or 200 2-wire channels of input data, while a system can handle up to 10 remote scanners.

Up to three different groups of channels may be programmed to scan at different time intervals. In addition to these intervals, a single continuous scan and up to 24 logic-triggered scans are available. The logic-triggered scans can be triggered by alarm conditions, or by calculated or measured values. Scan rates are also selectable on a channel-by-channel basis. Thirteen channels of data, selected from the scanned channels, may be displayed on the CRT.

These units contain several features to assist in data acquisition and reduction. Auto-zero and auto-cal help to increase accuracy and eliminate manual calibrations. Auto-zero is performed every 10 seconds on the integrating digital voltmeter, and auto-cal provides recalibration to a NBS-traceable reference every 5 minutes. Also provided are linearization of thermocouple types J, K, T, E, R, S, and B, as well as 100-ohm platinum and 10-ohm copper RTDs. To scale a linear transducer raw output to the user's desired units, these data loggers provide up to 20 linear functions of the form $Y = mx + b$, where m and b are user-selectable. Handling a special transducer is achieved by allowing the user to enter his own sixth order polynomial scaling function. Alarm and control applications provide for up to six programmable set points per channel. The alarm and control limits may be mixed and enable contact closures or print messages. The alarm messages are programmable to 12 characters. Averaging is provided either over time or group of channels.

In addition to the features listed previously, the model Ten/50 provides a full-function detachable keyboard, eight front panel function keys, and BASIC programming capabilities. User-developed BASIC programs are inserted at breakpoints within the data logger menu program. When the programming is being executed, the BASIC routine runs in sequence with the standard measurement and control duties.

e. Prerequisites: Any Autodata Ten series data logger along with its transducers may act as a stand-alone data acquisition system. A format-compatible tape readout device is required. Tapes may be read off line to an EIA RS-232-C port or 20-mA current loop. Acurex recommends Quantex series 1000, model 1099-08.

AUTODATA TEN/50 (PHOTO COURTESY OF ACUREX CORP.)

f. Input specifications:

	Voltage	Current
Ranges:	+50 mV	0-1 mA
	+500 mV	4-20 mA
	+5 V	10-50 mA
	+10 V	1-5 mA

Resolution: 60,000 counts

Thermocouples: J, K, T, R, S, E, B

RTDs: 100-ohm platinum
10-ohm copper

Integration period: (1/F) 5

CMR (DC & 50/60 Hz): 170 dB (3- or 5-wire)
130 dB (2-wire)

CMV: 250 V (3- or 5-wire)
100 V (2-wire)

Speed (ch/sec): 10 (60 Hz)
8 (5 Hz)

g. Output specifications:

BCD: 48 full-parallel outputs provide for driving 6-digit BCD displays; 4 channel/card, 12 cards/system.

Analog: Monitored channels may be converted to an analog output of 4-20 mA or 9-10 V under program control. Data must be scaled 0-10 or 0-20 mA. Up to 120 per system.

Contact: 1 A @ 26 VDC, 0.5 A @ 120 VAC. Used to control process equipment. Initiated by alarm conditions, calculated values, etc.

h. Interfacing:

EIA RS-232-C: Up to four independently controllable output ports for communication with computers, terminals, etc. Remote programming is available via any RS-232-C remote output.

Mag tape: Interface to Kennedy 1600 series magnetic tape unit incremental recorder or Kennedy 9832 buffered continuous recorder provides large volume data storage for future computer processing.

Video: 75-ohm connection allows information displayed on the on-board CRT to be simultaneously displayed on an auxiliary monitor up to 100 ft away.

i. Power requirements and recommendations: 115/230 VAC, 50 or 60 Hz (field selectable) draws less than 150 w. Protected power supply guards against voltage sags to 90 VAC, and suppresses line transients and voltage spikes.

j. Compatible equipment: Any EIA RS-232-C-compatible peripherals. Kennedy 1600 series incremental recorder. Kennedy 9832 buffered continuous recorder. Acurex Netpac data acquisition system for remote data acquisition. Quantex model 1099-08 data tape reader.

k. Software available: Ten/30 and Ten/50 Math Pac (standard) allows user to write complex algebraic expressions. A full range of complex functions, such as logorithmic, exponential, and trigonometric functions, as well as simple arithmetic functions, are included. Ten/50 BASIC Pac (standard) allows user to tailor special reports, operator instructions, graphic displays, or customized measurement progams.

l. Environmental conditions:

Temperature: (operating)	0 to 50 °C, w/o tape 10 to 40 °C, w/tape
Temperature: (storage)	-20 to 60 °C, w/o tape
Humidity: (operating)	0 to 90%, RH. noncondensing, w/0 tape; 20 to 80% R, w/tape
Humidity: (storage)	0 to 90%, noncondensing, w/0 tape
Operating altitude:	0 to 10,000 ft

m. Application information: Autodata Ten series data loggers are applicable where monitoring, alarming, and controlling a large number of transducers are required.

n. Comments: Autodata Ten series data loggers are user-friendly and operating instructions are easy to follow. A wide variety of options is available allowing for tailoring a specific system or adding to an existing system. Acurex provides customer service, start-up training, and application engineering support.

IV-15-2. **Type and description: Data logger, portable, programmable.**

a. Model: CR21

b. Manufacturer: Campbell Scientific, Inc.
P.O. Box 551, 815 W. 1800 N.
Logan, Utah 84321
(Phone) (801) 753-2342

c. Pricing: $2000.00, with EIA RS-232-C port

d. Operation: The model CR21 inputs data from a variety of sensors, processes the information, and stores the processed data in memory to be read later using a dial-up telephone line, cassette recorder, and storage module. It contains a microcomputer, signal conditioning for nine separate sensors, and internal memory capability for storing up to 608 processed data points. Seven of nine available input channels accept analog voltages in two program-controlled ranges: -0.2 to +2.5 or -2 to +25 mV. A 2-volt DC excitation for DC resistance measurements may be switched on under program control during the sensor scan cycle.

CR21 DATA LOGGER (PHOTO COURTESY OF CAMPBELL SCIENTIFIC, INC.)

In addition to the handling volts and millivolts, input channels 5, 6, and 7 can read resistance probes excited by the 680-Hz, 4-volt AC excitation supply. Inputs 8 and 9 are pulse-counting channels. These are reset each time they are read.

For each reading, the user keys in a processing program number, multiplier, and offset for each of the nine channels. Input conditioning programs in ROM include DC volts, DC millivolts, thermistor linearization, relative humidity sensor linearization, DC resistance, and AC resistance.

The input data are converted to engineering units and stored in nine memory locations for later output to the display or in data processing. The sensor data are processed by user-selected output processing programs.

e. Prerequisites: CR56 printer, C20 cassette interface, optional C2000 network data acquisition microcomputer, CRT terminal, LQ printer or matrix printer, system software.

f. Input specifications: Analog: nine channels, seven analog, and two pulse counting. Of the seven, channels 5, 6, and 7 can read AC resistance. Battery voltage is monitored by an internal channel.
Digital: 2 inputs, 5-V CMOS levels.

g. Output specifications: 4 CMOS for use with custom software.
Resolution: ±5 uV on millivolt range
±1 mV on voltage range

h. Interfacing: EIA RS-232-C (2 channel) port.

i. Power requirements and recommendations: Eight alkaline D cells, 4-6 months depending on ambient temperature and user's individual acquisition needs. Optional CR21L has sealed lead acid battery pack which requires that the AC power be applied continuously.

j. Compatible equipment: Not applicable.

k. Software available: See Part VI-6 of the Software report.

l. Environmental conditions: -25 to +50 °C, 0 to 95% RH (noncondensing).

m. Application information: Meteorology, vehicle performance, temperature, pressure, water flow, and seismic data collection.

n. Comments: The model DC 95 RF modem is used in conjunction with an RF transceiver. RF modem can communicate with any one of 255 other data stations on the same frequency. Model PC 2000 telecommunication option for the IBM PC XT computers provides software and hardware for unattended, automatic interrogation of CSI data loggers over switched telephone lines, RF links, or dedicated lines.

IV-15-3. Type and description: **Data logger, GEMS Terratrac.** This data logger is a stand-alone unit or may be remotely controlled as part of a distributed system. Terratrac is a versatile and reliable system that interfaces to vibrating wire transducers (plucked and auto-resonant types), extensometers, and thermistors, and offers resistive temperature

sensors, analog piezometers, 4-20-mA wire transducers, and strain gages (i.e., Carlson-type instruments).

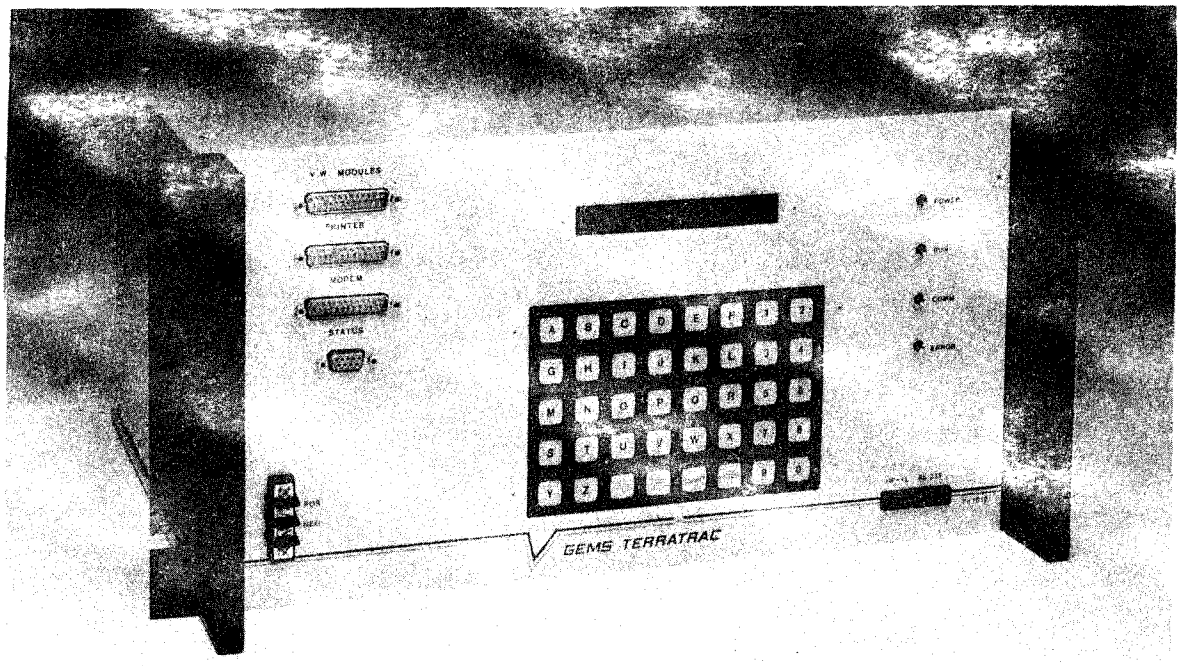

TERRATRAC DATA LOGGER (PHOTO COURTESY OF GEMS)

a. Model: Terratrac

b. Manufacturer: Geotechnical Engineering and Mining Services, Inc.
190 West Rafferty Gardens, Unit 8
Littleton, CO 80120
(Phone) (303) 794-1912

c. Pricing: #3,386.00 (with 16 input channels)

d. Operation: The Terratrac is a menu-driven, fully programmable data logger with a full alphanumeric display and keyboard. Menu-driven prompts ease the tasks of scheduling the readings, examining the logged data, and controlling the operation.

Each unit has the capability to monitor ten vibrating wire sensors and 32 other analog instruments. The addition of mulitplexing signal conditioning modules increases the capacity to 132 vibrating wire sensors and 96 analog instruments. A module is also available for the Carlson-type strain-gages allowing up to 20 inputs, as well as a pressure transducer module.

The Terratrac may be controlled remotely through one of the two RS-232-C ports or through the HP-IL port. These ports allow easy communications with all other GEMS equipment, as well as other RS-232-C-compatible equipment or Hewlett-Packard HP-IL compatible equipment (i.e., HP 41CV calculator or HP 85 computer). Data gathered on site may be transmitted to the project office or headquarters via common telephone line, dedicated communication line, radio telemetry, or satellite.

On board memory devices provide for nonvolatile storage of 2000 readings, and are expandable to store up to 4000 readings. A real-time clock provides time-stamping of data as well as scheduling of data collection times.

e. Prerequisites: The Terratrac may operate as a stand-alone unit, but also may be used with RS-232-C- or HP-IL-compatible computers or calculators.

f. Input specifications:

Vibrating wire:	10 inputs standard expandable to 132 inputs or 66 auto-resonant inputs
Extensometer/thermistor:	8 inputs standard expandable to 64 analog sensor inputs (pressure sensor, load cell, etc.)
Strain gage:	4 inputs standard (with excitation) expandable to 32
Carlson strain gage:	expandable to 20 inputs

g. Output specifications: Not available.

h. Interfacing: RS-232-C or HP-IL.

i. Power requirements and recommendations: A 12-VDC internal battery with a 120 VAC recharger or optional solar panel recharger provides power for the Terratrac. An optional battery back is required for storage of 4000 data readings.

j. Compatible equipment: The Terratrac is compatible with any RS-232-C or HP-IL equipment. Compatible GEMS equipment includes internal modems (Bell 103 or 212 compatible) and data telemetry equipment.

k. Software available: IDBS-8000. (Refer to "Available Data Collection and Reduction Software", Report 3., para. V-1-18.)

l. Environmental conditions:
-10 to 55 °C (operating)
-40 to 55 °C (quiescent)
0 to 95% RH (noncondensing)

m. Application information: The Terratrac data logger has a wide variety of applications, including harsh and remote field locations usually associated with civil engineering and mining projects.

n. Comments: None.

IV-15-4. Type and description: Data logger, Fluke 2280B. This is a menu-driven data acquisition unit capable of complex mathematical functions (algebraic, trigonometric, logorithmic, etc.), and also capable of monitoring 20 channels (expandable to 1500 points). This unit has a 40-character display, an alphanumeric printer, and optional DC-100 cartridge data tape storage.

a. Model: 2280B

b. Manufacturer: John Fluke Mfg. Co., Inc.
P.O. Box C9090
Everett, WA 98206
(Phone) (206) 347-6100

c. Pricing: $7,000.00 to $15,000.00, depending on options

d. Operation: The model 2280B is programmed by responding to a series of English-prompted menus. Responses are entered via the front panel keypad. The optional data storage system (option 214) uses a DC-100 cartridge data tape allowing nonvolatile storage of data or programs. A front panel key lock prevents unauthorized access to the data logger controls.

A mixture of various types of signals may be input to the data logger via specialized input modules. These modules are capable of accepting inputs of AC voltage, DC voltage and current, thermocouple, BCD, contact closures, RTDs, 1/4-, 1/2-, and full-bridge strain gages, and frequency. Data may also be directly output to Port A, Port B, or DC-100 tape. Ports A and B are two interface slots that may contain either RS-

232-C (option 341) or IEEE-488 (option 342) interfaces. The DC-100 data tape may be read using the tape reader (accessory A22-301) and output to any EIA RS-232-C-compatible device (i.e., computer, printer).

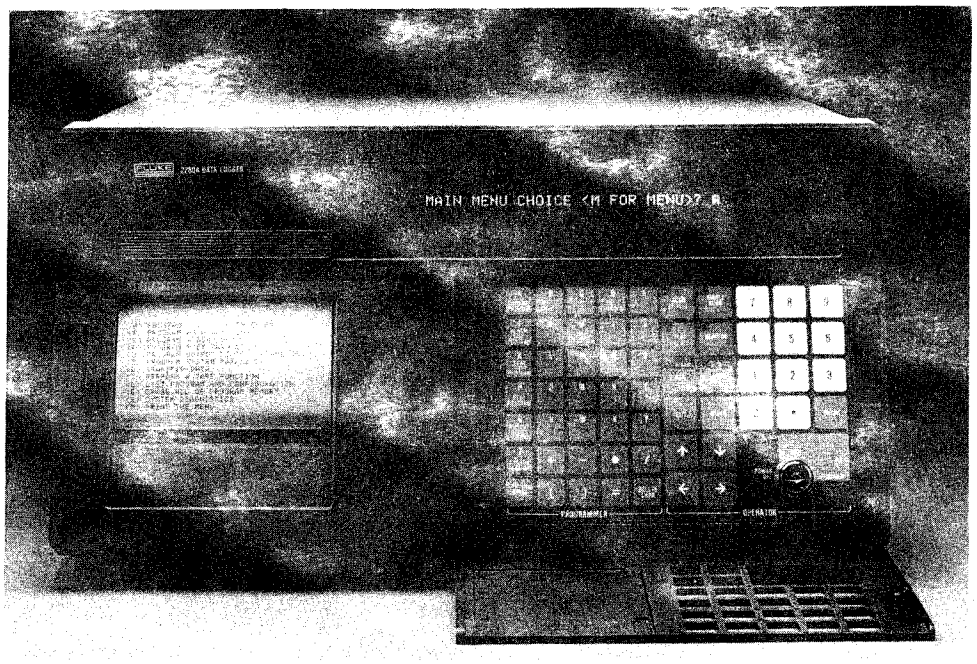

2280B DATA LOGGER (PHOTO COURTESY OF JOHN FLUKE MFG. CO.)

A variety of mathematical functions is available on the model 2280B. Standard functions are addition, subtraction, multiplication, division, and parentheses. Linearization of thermocouples J,K,T,E,R,S,N,B,W-SRE vs. W-26RE, and J,T (DIN), as well as 100-ohm platinum and 10-ohm copper RTDs are also standard. An optional advanced mathematics package (option 211) provides expanded mathematics capabilities. This package supports algebraic, trigonometric, logorithmic, exponential, standard deviation, maximum and minimum values, interpolation, and logical functions. The advanced mathematics option also increases throughput and system scanning speed.

The model 2280B executes up to ten independent prioritized scan groups. A scan group is a set of instructions that describes how the data logger scans, processes, and records information. Each scan group contains an independent list of channels to be scanned. The channels may be listed in any order, and are recorded in the same sequence they are listed. Scan groups may be triggered in the following ways: Time

Interval - adjustable from 1 sec to 24 hr; Continuous - group automatically retriggers itself; Discrete - at a given time; External - via a switch, contacts, etc.; On Demand - via an alarm or requested through the front panel; and Scan Once - via front panel. When a scan is initiated, the time, date, and a 40-character user-defined label are recorded to label the scan data.

Alarm capabilities are also provided on the model 2280B data logger. Four high/low limits are available for each channel, and each limit may cause a user-defined message describing the alarm condition to be recorded. The message may also be displayed on the 40-character display by pressing "ALARM ACK" on the front panel.

e. Prerequisites: The model 2280B can act as a stand-alone data acquisition system or be teamed with EIA RS-232-C or IEEE-488-compatible devices. The optional DC-100 data tape requires a tape reader. The tape reader may be purchased as accessory A22-301.

f. Input specifications:

	Range	Resolution
DC volts:	±64 mV	1 uV
	±512 mV	10 uV
	±8 V	100 uV
	±64 V	1 mV
DC current:	0-250 mA	100 uA
AC volts:	5-250 V	0.1 V
Resistance:	64 ohm max	1 Mohm
	512 ohm max	10Mohms
RTDs:	100-ohm platinum 10-ohm copper	
Thermocouples:	J,K,T,E,R,S,B,N, C,JDIN,TDIN	
Frequency:	400 kHz (max)	

g. Output specifications:

Digital:	100 mA
Analog:	-5 V to +5 V
	0 V to 10 V
	4 mA to 20 mA

h. Interfacing: EIA RS-232-C or IEEE-488 provides two ports of either type.

i. Power requirements and recommendations: 100 V, 120 V, 220 V, 240 V ± 10% at 50 or 60 Hz; or 10.5 to 15.0 VDC, 120 w max, 75 w nominal. The model 2280B is equipped for automatic switchover to an external 12-VDC power supply in the event of line power failure. Switching does not affect operation of the data logger. When the model 2280B is operating on line power, the external 12-VDC battery is automatically trickle charged.

j. Compatible equipment: Any EIA RS-232-C or IEEE-488 compatible equipment (i.e., computers, printers).

k. Software available: Fluke has developed a data acquisition software package (model S-2280; price $295.00) for the model 2280B that runs on the IBM PC. The system uses the model 2280B under IBM PC control. This product was released during the fourth quarter of 1985.

l. Environmental conditions: Temperature: 0 to 50 deg C operating and -25 to 60 deg C nonoperating. Humidity: 40 to 95% (noncondensing). Altitude: 3000 m operating, 12,000 m nonoperating.

m. Application information: The model 2280B is compact enough (8.75 X 17.00 X 26.05 in.) to be used as a portable unit. Using an external 12-VDC battery allows this unit to be transported to remote sites where transducers are located. Data may be taken and stored on the optional DC-100 tape cartridge, and output to a printer or computer at a later time.

n. Comments: None.

IV-15-5. Type and description: **Data acquisition system, pneumatic piezometer, GEMS.** This is a stand-alone unit that uses low-power CMOS electronics, and brass scanning and sampling valves. The equipment controls the nitrogen flow and valving to monitor all types and makes of pneumatic sensors. The system is capable of operating unattended for long periods of time in harsh environments.

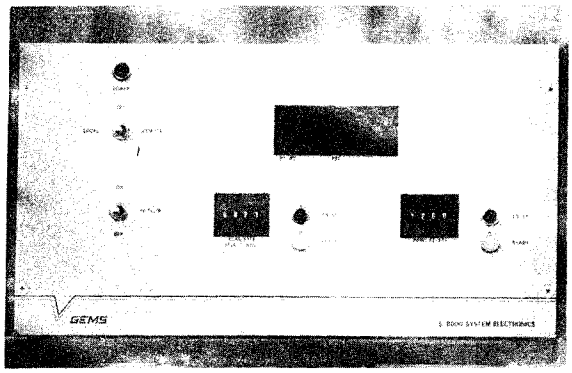

PDA-840 SERIES CONTROLLER (PHOTO COURTESY OF GEMS)

a. Model: PDA-840 series

b. Manufacturer: Geotechnical Engineering and Mining Service, Inc.
190 West Rafferty Gardens, Unit 8
Littleton, CO 80120
(303) 794-1912

c. Pricing: Controller is $7,658.00 and the pneumatic input is $2,992.00.

d. Operation: Each scan by the PDA-840 consists of opening the pneumatic line, establishing nitrogen flow, taking a pressure reading, closing the line, and opening the next line to be read. The system software can identify open/broken lines as well as clogged lines. Damaged lines cause an error message to be generated, and the damaged line is dropped from subsequent scans.

The PDA-840 system is menu-driven. Menu-driven prompts make it easy to change the scanning schedule and retrieve the logged readings. There is no special programming because all commands consist of simple entries in response to prompting questions. The Hewlett-Packard 75 hand-held computer is used as an interrogator and operator's terminal via the HP-IL interface provided on the PDA-840. The PDA-840 also

has a 40-character full alphanumeric keyboard with a 16-character LED display and two RS-232-C communications ports.

Data gathered on-site may be transmitted to a central location over a telephone line, a dedicated communication line, by radio telemetry, or by satellite. The PDA-840 is compatible with the GEMS remote UHF radio link providing for telemetry. These communications options allow configuration of a versatile and cost efficient data acquisition system. Data may flow directly from the on-site location to an engineer without any intermediate data handling.

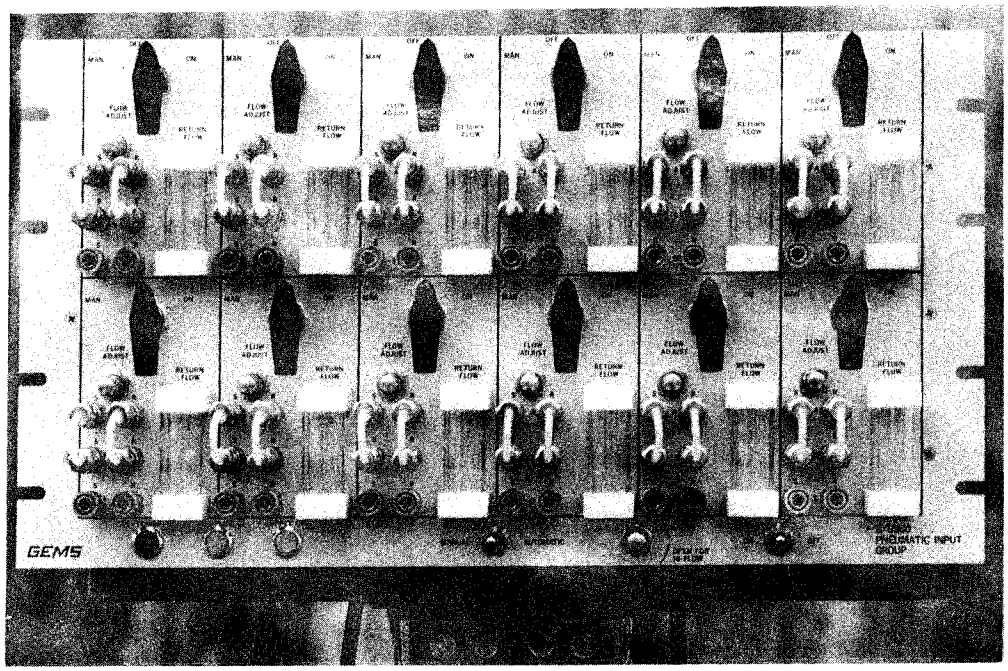

PDA-840 SERIES PNEUMATIC INPUT (PHOTO COURTESY OF GEMS)

e. Prerequisites: The PDA-840 may operate as a complete stand-alone system.

f. Input specifications: Flow rates: 2cc/min to 500cc/min. 200 psi working pressure at -10 ^{o}C to 2000 psi at 55 ^{o}C.

g. Output specifications: Not available.

h. Interfacing: Two RS-232-C ports, one HP-IL port.

i. Power requirements and recommendations: 12 VDC battery, rechargeable from 120 VAC or optional solar panel.

j. Compatible equipment: GEMS GOES satellite and UHF radio links, Hewlett-Packard HP 75 hand-held computer.

k. Software available: GEMS can provide custom software to interface with any minicomputer or mainframe.

l. Environmental conditions: Temperature: -20 to 55 °C (operating), -40 to 55 °C (quiescent). Humidity: 95% RH. (noncondensing).

m. Application information: GEMS PDA series data acquisition systems are used in dam monitoring and pumping station monitoring systems. Dam applications include mine tailing dams and concrete dams.

n. Comments: The PDA-840 system is recommended for use in retrofitting applications only. This recommendation is attributed to the problems and poor reliability of pneumatic valves.

Analog Multiplexers

IV-16-1. Type and description: Scanner, multiplexer. The Hewlett-Packard model 3495A multiplexer scanner switches analog input signals to an appropriate measuring device, i.e., voltmeter. With the additional feature of controlling external devices via relay actuator closures, this unit is well suited for data acquisition and control applications.

a. Model: HP 3495A

b. Manufacturer: Hewlett-Packard
P.O. Box 10301
Palo Alto, CA 94303-0890
Phone: (415) 857-8000

c. Pricing: $2200.00 to $10,000.00, depending upon options selected

d. Operations: The HP 3495A multiplexer may be used for sequential or random scanning, that is controlled by any IEEE-488-compatible controller. Any combination of four relay assemblies may be used per scanner mainframe. A Need of more than four relay assemblies will require additional scanner mainframes. Available relay assemblies include: ten-channel low thermal relay assembly (option 001), ten-channel relay actuator (option 002), nine-channel reference assembly with thermocouple compensation (option 003), twenty-channel low thermal relay assembly (option 004), and nineteen-channel reference assembly with thermocouple compensation (option 005). A high-speed controller board is also optional (option 100). Maximum channel capacity is 80, and the thermocouple compensation options allow direct connections to thermocouples. Switching times are 10 msec maximum or 1 msec maximum using the optional high-speed controller.

e. Prerequisites: Control is achieved by any IEEE-488-compatible computer.

f. Input specifications:

Option	Vmax	Amax	Thermocouple offset	Isolation
001	230 V peak	200 mA	<2 uV	>1010 ohms
003	42 V peak	200 mA	<2 uV	>107 ohms
004	42 V peak	40 mA	<1 uV	>107 ohms
005	42 V peak	40 mA	<1 uV	>107 ohms

g. Output specifications: Option 002 ratings: maximum contact voltage = 100 V rms. Maximum contact current = 2 A rms.

h. Interfacing: IEEE-488.

i. Power requirements and recommendations: 100/120/220/240 V + 5%, -10%, 48 to 66 Hz.

j. Compatible equipment: IEEE-488-compatible computers.

k. Software available: Not applicable.

l. Environmental conditions:
Temperature: 0 to 55 °C
Humidity: 0 to 95% RH. @ 0 to 40 °C

m. Application information: Typically used for multiplexing low level DC voltages and resistances such as outputs of thermocouples, thermistors, strain gages, and various other transducers.

n. Comments: None.

IV-16-2. **Type and description: Multiplexer, Keithley 706.** The Keithley model 706 is a multiplexer unit that is capable of scanning channels, operating as a matrix, or setting any combination of relay closures. This unit is IEEE-488 compatible and has an optional interfacing and software package for the IBM PC XT.

a. Model: 706

b. Manufacturer: Keithley Instruments, Inc.
28775 Aurora Road
Cleveland, OH 44139
(Phone) (216) 248-0400

c. Pricing: Mainframe, $1995.00
Modules, $450.00 to $1195.00
IEEE-488 interface, $595.00
Software, $250.00

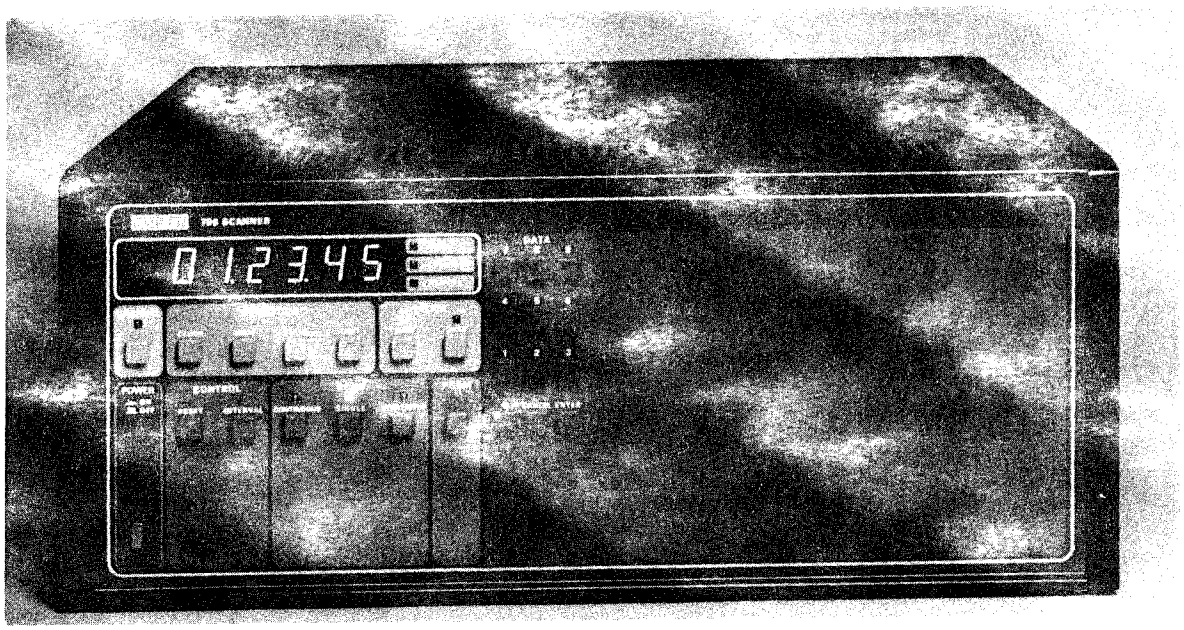

706 SCANNER (PHOTO COURTESY OF KEITHLEY INSTRUMENTS, INC.)

d. Operation: The model 706 has a capacity for 10 switching cards which allows up to 100 channels of 2-pole switching or 200 matrix crosspoints. The matrix memory stores up to 75 sets of complex relay closures, and recalls any one by selecting the memory location or in sequence through the step scan control. Standard features include hardware triggers, programmable intervals and delays, bench or system controls, and IEEE-488 interface. The model 706 may function as a controller of the IEEE-488 bus and control up to four slave units on one IEEE address.

The selection of 10 switching cards covers a broad range of applications including low voltage (1 uV), low current (1 pA), thermocouple, RF to 500 MHz, 5-A current, 1000V switching, as well as general purpose signal and matrix switching.

General purpose switching is accomplished by using the model 7052 5 x 5 matrix card. The flexibility of matrix switching allows connection of any input channel to any output channel, singularly or

in combination. This card is ideal for complex measurement device switching.

A ten-channel scanner card, model 7056, provides relay switching of 1- and 2- pole channels. The card provides 10 channels of 2-pole inputs or 20 channels of 1-pole inputs. Any of the inputs may be switched to the card output.

The model 7057A card provides inputs for 9 thermocouples or other transducers. This card may be used with any thermocouple; types B, E, J, K, R, S, and T have linearization factors provided in the manual. Any combination of thermocouple types may be used.

The low current scanner card, model 7058, switches any one of ten input signals to the output or any one input to ten outputs. This card uses triaxial connectors to keep offset errors at a minimum (under 1 pA).

For low-level transducer switching, the model 7059 is designed to reduce thermal voltage error and ensure high isolation between inputs. This module switches any one of ten inputs to the output or one input to ten outputs. A 20-channel card, model 7064, is also available.

The IEEE-488 interface may be used to connect the model 706 to an IBM PC via the model 8573 interface card. The interface is made up of two parts: an interface board and the handler software. The interface board plugs into any expansion slot on the IBM PC. Data may be read from transducers, and multiplexed and read into the IBM PC via DMA or programmed I/O. The software handler provides the controls needed to support the IEEE-488 bus.

e. Prerequisites: The model 706 may perform as a stand-alone multiplexer or operate with the IBM PC.

f. Input specifications:

Model 7052:	200 V (max), 200 mA (max)
Model 7056:	150 V (max), 250 mA (max)
Model 7057:	Thermocouples B, E, J, K, R, S, and T
Model 7058:	100 V (max), 100 mA (max)
Model 7059:	200 V (max), 100 mA (max)
Model 7065:	40 V (max), 100 mA (max)

g. Output specifications:

Model 7058:	100 V (max), 100 mA (max)
Model 7059:	200 V (max), 100 mA (max)

h. Interfacing: IEEE-488.

i. Power requirements and recommendations: Stand-alone: rechargeable 3.6 V battery; IBM PC: draws 500 mA @ +5 V from PC.

j. Compatible equipment: IBM PC XT and compatibles.

k. Software available: Model 8573 software is the handler for the IEEE-488 interface.

l. Environmental conditions:

Temperature:	0 to 50 °C (operating)
Humidity:	0 to 80% RH. (operating)

m. Application information: The model 706 may be used to multiplex banks of transducers to reduce data acquisition time. Various transducers may be connected to the model 706, such as RTDs, strain gages, thermocouples, etc.

n. Comments: None.

Signal Conditioners

IV-17-1. Type and description: Transmitter, temperature. This is used to convert millivolt signals from thermocouples to process current or voltage level outputs.

a. Model: 7200SC series, Scientific Columbus
50ET4000, Fischer & Porter
54-8114, Love Controls
ED-1-T1-3B-6B-0-N, Burling
E93 series, Foxboro
TX-52-T1, Omega

b. Manufacturer: Scientific Columbus
1900 Arlingate Lane
Columbus, OH 43228
(Phone) (614) 274-7160

Fischer & Porter
125 E. County Line Rd.
Warminster, PA 18974
(Phone) (215) 674-6000

Love Controls Corp.
1475 S. Wheeling Road
Wheeling, ILL 60090
(Phone) (312) 541-3232

Burling Instr. Co.
P.O. Box 298
16 River Road
Chatham, NJ 07928
(Phone) (201) 635-9481

Foxboro Company
100 Neponset Ave.
Foxboro, MA 02035
(Phone) (617) 543-8750

Omega Engineering, Inc.
1 Omega Dr., Box 4047
Stamford, CT 06907
(Phone) (203) 359-1660

c. Pricing: Scientific Columbus 2-8mV $555; 8-30mV $470
Fischer & Porter $395.00
Love Controls 54-series, $405.00,
Burling Instr. $183.00
Foxboro $420 (non-isolated); $560 (isolated)
Omega TX-52-T1, $255.00,

d. Operation: The transmitter offers amplification, conversion to conventional process control outputs, and cold junction compensation. The thermocouple wiring is connected to a screw terminal block on the back. Scientific, Love, and Burling transmitters are plug-in units, so that repairs may be made without disturbing the wiring. All units can be provided with optional alarm or control relays. The outputs of the Scientific series are field-selectable. Love Controls series provides only one factory-installed output which the user must specify. Burling's transmitters provide only the 4-20 mA and 0-10 VDC outputs. The cold junction compensation corrects for changes in ambient temperatures.

e. Prerequisites: None.

f. Input specifications: Standard J, K, T, R, S, and E thermocouples (Love Controls and Scientific). T, J, K thermocouples and RTDs (Omega and Burling). Input impedance: 50-k ohm min. (Scientific) 300-k ohm (Love).

g. Output specifications:
Output current: 1-5 mA, 4-20 mA, 10-50 k ohm (Scientific)
Output load: 6 k ohm, 0-1.5 k ohm, 0-600 ohm
Output voltage: 0-10 VDC
Accuracy: ±0.1% over 10 span mV
(Omega) Output current: 4-20 mA
Load impedance: Not available
(Love) Output Current: 1-5 mA, 4-20 mA, 10-50 mA
Load impedance: 5 k ohm, 1 k ohm, 500 ohms, respectively
Output voltage: 0-5 VDC into 5 k ohms
(Burling) Output current: 4-20 mA
Output voltage: 0-10 VDC

h. Interfacing: These transmitters are designed for use with process current or voltage receivers.

i. Power requirements and recommendations: Field-selectable 120/240 VAC, 60 Hz. Omega uses output for power input.

j. Compatible equipment: Data loggers with any of the following type inputs:

0-5 VDC
0-10 VDC
1-5 mA
4-20 mA
10-50 mA

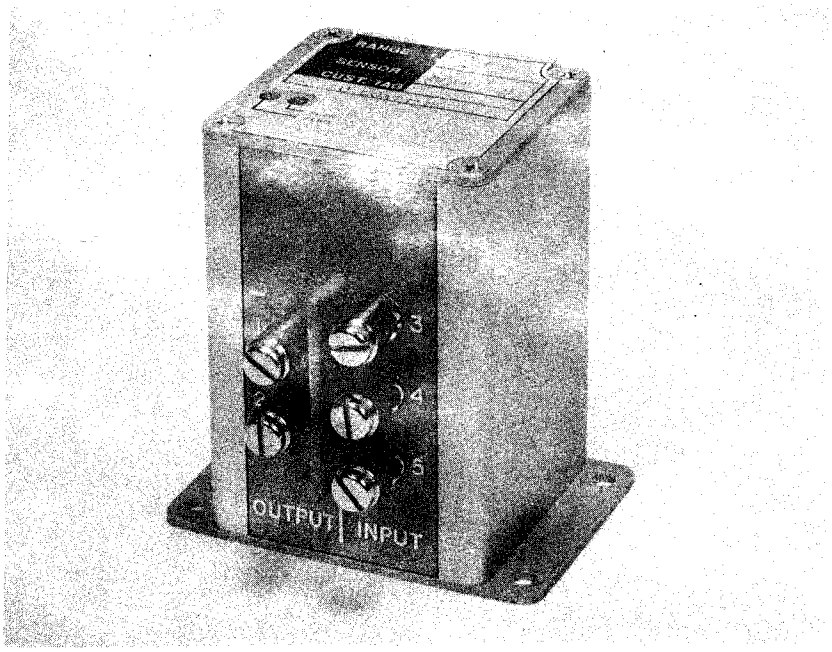

E93 SERIES TEMPERATURE TRANSMITTER (PHOTO COURTESY OF FOXBORO)

k. Software available: Not applicable.

l. Environmental conditions:
Temperature Range: 0-140 °F
Humidity: 0-70% RH. normal, 0-90% RH. extreme
Physical specifications:

(Scientific)	86.5 mm x 177.8 mm x 182.6 mm
(Love)	100 mm x 100 mm x 155.5 mm
(Burling)	111.25 mm x 11.25 mm x 162 mm
(Omega)	31.75 mm x 82.55 mm x 101.6 mm

m. Application information: All units must be placed in an appropriate enclosure (NEMA 4). The Burling transmitter has an optional NEMA 1 enclosure.

n. Comments: Some of the options available on some models are: input/output isolation, input/output grounded or floating, built-in alarms, and other enclosures.

IV-17-2. **Type and description: Signal conditioner, flowmeter.** Magnetic pickoff compatible input.

a. Models: ACC-7B, ACC-17B, ACC-27

b. Manufacturer: Hoffer Flow Controls, Inc.
149 Highway 36, P.O. Box 130
Port Monmouth, NJ 07758
(Phone) (201) 787-1997

c. Pricing: ACC-7B, $125.00; ACC-17B, $200.00; ACC-27, $150.00; base prices

d. Operation: A small voltage from a magnetic pickoff coil is applied to the input of the signal conditioner. The output is a pulse with optional TTL/CMOS or open collector.

e. Prerequisites: An ACC-1 remote preamplifier may be used to boost the signal from a magnetic pickup coil with a gain from 0-50.

f. Input specifications: Not available, but compatible with Hoffer products and other brands that have magnetic pickoff output instruments.

g. Output specifications: TTL/CMOS and open collector levels.

h. Interfacing: May be connected directly to data acquisition equipment that converts TTL level pulse trains to binary data for display or data storage. Optionally, a signal converter (Hoffer ACC-18, ACC-28 frequency to current/voltage, respectively) may be inserted between the signal conditioner and the data acquisition equipment.

i. Power requirements and recommendations: ACC-7B (5-35 VDC), ACC-17B (115/230 VAC)

j. Compatible equipment: Hoffer HP Series flowmeters. (Refer to para. II-17-3).

k. Software available: Not applicable.

l. Environmental conditions: 0-70 °C ambient temperature ranges.

m. Application information: For use with magnetic pickoff output instruments.

n. Comments: Other signal conditioners and converters for temperature and pressure are available from Hoffer Flow Controls, Inc.

IV-17-3. Type and description: Transducer conditioner, strain gage. The model TM-1613 provides individual on-board power with 2- to 12-V adjustment and Wagner ground to improve common mode rejection. Mounts in a 19-inch equipment rack and provides easy back panel access to input screw terminals. Built-in calibration and bridge completion resistors are accessible via the top cover.

a. Model: TM-1613

b. Manufacturer: Imperial Instruments
(distributed by)
Transducer Techniques
27715 Jefferson Avenue, Suite 113D
Rancho, CA 92390
(Phone) (714) 676-3965

c. Pricing: $1,800.00 (10 channel)

d. Operation: Provides excitation voltage and bridge completion resistors for strain, force deflection, pressure, etc.

e. Prerequisites: None.

f. Input specifications: 8 or 10 channel. 1/4-, 1/2-, full-bridge completion. 120 - 10,000 ohms.

g. Output specifications: 8 or 10 channel. 2 to 12 VDC excitation voltage.

h. Interfacing: Not available.

i. Power requirements and recommendations: 115 VAC, 50-400 Hz; 50 w.

j. Compatible equipment: Data loggers and data acquisition systems which have voltage inputs, but no hardware to support strain gage type transducers.

k. Software available: Not applicable.

l. Environmental conditions: Operating temperature: 0 to 50 °C.

m. Application information: Designed to provide low cost signal conditioning for data acquisition systems.

n. Comments: Most I/O specifications of signal conditioners are standard.

IV-17-4. **Type and description: Signal converter for resistance transmitter.** Used to convert the resistance change into a standard current signal.

a. Model: 90.515-F21

b. Manufacturer: JUMO Process Control, Inc.
410 Garibaldi Ave.
Lodi, NJ 07644
(Phone) (201) 779-7744

c. Pricing: $170.00

d. Operation: The input signal of the signal converter is the 3-wire output (0-100 ohm) of hydro transducers and hygro-thermo transducers. The resistance value of the resistance transmitter is converted to a proportional 20-mA current signal. Indicators, recorders, and controllers with a suitable input circuit may be connected to the converter for direct processing of the signal.

e. Prerequisites: Not applicable.

f. Input specifications: Resistance range: 0-100-ohm linear.

g. Output specifications: Proportional DC current, 4 to 20 mA burden, 500 ohms.

h. Interfacing: Compatible with process current receivers used in automated data acquisition equipment.

i. Power requirements and recommendations: 220 VAC ±10%, 50 Hz.

j. Compatible equipment: Same as interfacing.

k. Software available: Not applicable.

l. Environmental conditions: Ambient temperature range: 0 to 50 °C.

m. Application information: May be used with JUMO humidity resistance transmitters, models 90.515-F03, -F13, -F18.

n. Comments: Output current of 4 to 20 mA option should be ordered.

IV-17-5. Type and description: **Signal conditioner, LVDT.** The IEM/CAS-025I is a line-powered instrument that provides the excitation, amplification, demodulation, and DC power to operate an LVDT-type transducer and deliver a 4-20 mA output current. It also features 100% zero suppression, which permits the entire operating range of an LVDT-type transducer to be used.

a. Model: IEM/CAS-025I

b. Manufacturer: Schaevitz Engineering
P.O. Box 505
Camden, NJ 08101
(Phone) (609) 662-8000

c. Pricing: $955.00

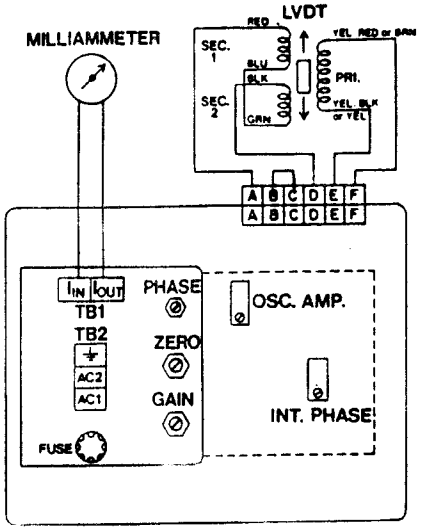

FIGURE 46. WIRING CONFIGURATION FOR LVDT

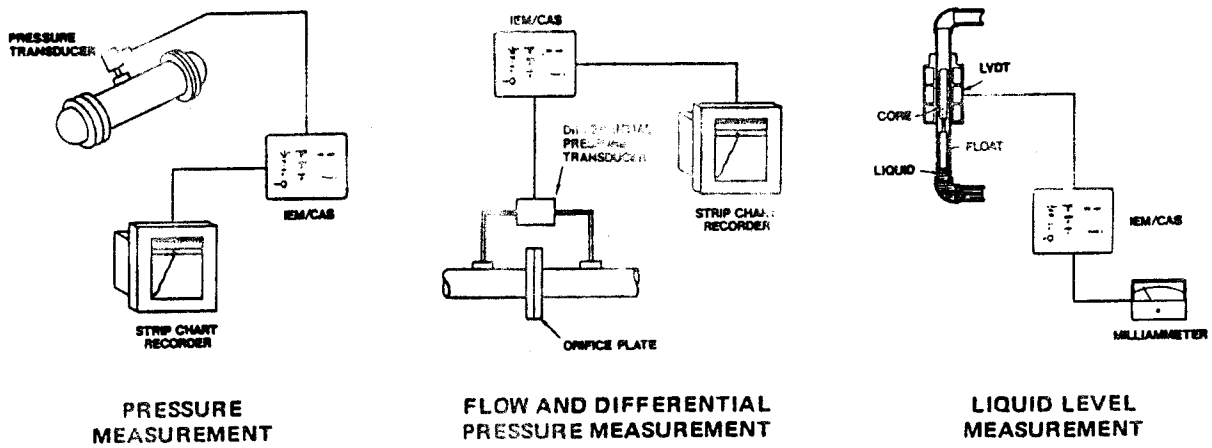

FIGURE 47. TYPICAL APPLICATIONS FOR LVDT

d. Operation: The IEM/CAS signal conditioner is housed in a heavy duty NEMA 12 enclosure to protect it from dust, dirt, water, and other contaminants. Power and output connections are made through conduit ports in the enclosure, while the LVDT connections are made through an environmentally sealed bayonet-type connector. A typical wiring configuration is shown on the preceding page.

The IEM/CAS provides AC excitation and signal amplification for an LVDT transducer and converts the LVDT output into a 4 to 20 mA DC current that may be logged or used to drive a strip chart recorder or ammeter. This unit features 100% zero suppression, allowing use of the full operating range of the LVDT.

e. Prerequisites: Transducer and associated cabling.

f. Input specifications: Accepts input from a LVDT type transducer.

g. Output specifications:

Current:	4 to 20 mA
Loop resistance:	0 to 500 ohms
Transducer excitation:	2.5 kHz

h. Interfacing: Not applicable.

i. Power requirements and recommendations: 115 VAC, 50 to 400 Hz.

j. Compatible equipment: LVDT transducers.

k. Software available: Not applicable.

l. Environmental conditions: Temperature 0 to 50 °C.

m. Application information: The IEM/CAS may be used with an LVDT transducer to measure flow, pressure, liquid levels, and displacements.

n. Comments: None.

IV-17-6. Type and description: Detectors, resistance temperature (RTDs).

a. Model: 7300 SC series

b. Manufacturer: Scientific Columbus, Inc.
1900 Arlingate Lane
Columbus, OH 43228
(Phone) (614) 274-7160

c. Pricing: 7300SC-AA, 25 ohms and up, $445.00
7300SC-AA, 3 to 25 ohms, $614.00

d. Operation: A transmitter measures the change in resistance and converts the resistance change to a standard output current, i.e., 1-5 mA, 4-20 mA, and 10-50 mA DC, that is field-selectable and compatible with current process receivers. The output being proportional to temperature.

e. Prerequisites: Requires appropriate RTD for a particular model.

f. Input specifications: 10 to 10,000 ohms. Ranges from -50 to +1000 °F.; N < 3 mA, P < 5 mA, C < 50 mA sensor current.

g. Output specifications: 1-5 mA, 4-20 mA, 10-50 mA or optionally 0-10 VDC. Accuracy is dependent on range, but no greater than 1 °F for N, 1.5 °F for P, and 2 °F for C.

h. Interfacing: Current process receivers.

i. Power requirements and recommendations: 117 V ±10%, 50-60 Hz, 6 w (typ), DC optional.

j. Environmental conditions: 0-140 °F. Must be mounted in a watertight enclosure.

k. Physical specifications:

Dimensions:	182.8 X 86.5 mm
Weight:	2.72 kg

l. Reliability: Not available.

m. Application information: Optional alarms.

n. Comments: None.

IV-17-7. **Type and description:** Amplifier, high gain.. This a low noise amplifier designed specifically for seismological and geophysical applications. It features state-of-the-art integrated circuits and solid state components throughout for high reliability and minimum power consumption.

a. Model: AS-110

b. Manufacturer: Sprengnether Instruments, Inc.
4567 Swan Avenue
St. Louis, MO 63110
(Phone) (314) 535-1682

c. Pricing: $455.00

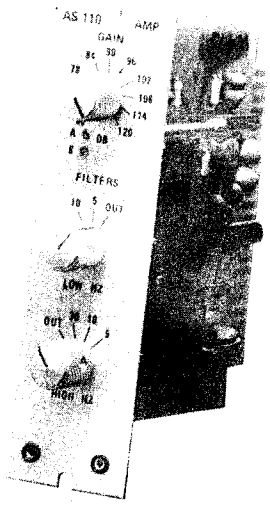

AS-110 HIGH GAIN AMPLIFIER (PHOTO COURTESY OF SPRENGNETHER)

d. Operation: The seismic signal from a geophone may be amplified up to one million times in a gain range of 60 to 120 dB in 6-dB steps. Built-in low and high-cut filters with 12-dB/octave slopes provide a wide selection of response characteristics or noise reduction.

The low noise, 60-dB DC preamp followed by a variable gain and band-pass amplifier section provides a unique combination of performance and versatility in a single package.

e. Prerequisites: Use with geophone transducers and similar inductive pickup transducers. Must use Sprengnether PTS-3, PTS-6, or PTS-9 field signal conditioning systems. See Seismic Instrumentation, paragraph III-14-2 for system description.

f. Input specifications:
Impedance: 1000 k ohms; typical transduction input 7.02 V/in./sec.

g. Output specifications:
±10 V; voltage gain, 60 dB to 120 dB in 6-dB steps.
Frequency response: 0.2 to 100 Hz
Filter characteristics: 12 dB/octave, 6-dB points as follows: low cut 0.2(out), 5, 10 Hz high cut 5, 10, 30, 100(out) Hz load current 10 mA maximum, nominal

h. Interfacing: The high-level output of this card requires a data acquisition system that can handle high- level signals. Also the AS-110 may be used with the Sprengnether TC-10 telemetry VCO. (See Telemetry transmission devices, para. IV-19-4).

i. Power requirements and recommendations: Power: ±10 to ±15 VDC @ 15 mA. This power is supplied by batteries in the Sprengnether PTS-3, PTS-6, or PTS-9 field signal conditioning systems.

j. Compatible equipment: See para. e. above.

k. Software available: Not applicable.

l. Environmental conditions:
Operating temperature: -30 to 60 °C
Storage temperature: -40 to 85 °C
Humidity: 95% RH (noncondensing)

m. Application information: Specifically for seismic event signals, but may be used with other magnetic pickup transducers.

n. Comments: See comments in para. II-12-4 of Seismic Instrumentation regarding Sprengnether seismic recorder systems.

Hardwire Transmission Devices

IV-18-1. Type and description: Modem, short haul. This short haul modem operates asynchronously over full-duplex 4-wire circuits at speeds of up to 19.2 kbaud for distances of over one mile. At 110 baud, the distance increases to 18 miles depending on operating conditions and the type of line used. This unit is designed to work with DTE devices and extend RS-232-C communications and eliminate the bulk and cost of RS-232-C cable.

a. Model: S-ME 720, and S-ME 725

b. Manufacturer: Black Box Corporation
P.O. Box 12800
Pittsburgh, PA 15421
(Phone) (412) 746-5500

c. Pricing: $85.00

d. Operation: No external controls. Model number S-ME720 has male connector (25 pin), and model number S-ME725 has female connector.

e. Prerequisites: Two asynchronous devices with RS-232-C DTE ports.

f. Input specifications: RS-232-C standard and twisted pair wire.

g. Output specifications: Same as input specifications.

h. Interfacing: DBM 25 (available in plug or socket) RS-232-C connector and two twisted pair wires.

i. Power requirements and recommendations: Powered from device RS-232-C port.

j. Compatible equipment: Any devices with DTE asynchronous RS-232-C ports.

k. Software available: Not applicable.

l. Environmental conditions: 0 to 50 °C. 0 to 95% RH. (noncondensing).

m. Application information: Used to extend RS-232-C communications between DTE asynchronous ports.

n. Comments: Several other short haul modems are available from Black Box for DTE to DCE communications, self-powered units with 110 VAC supplies, synchronous links, line drivers with ranges up to 19.5 miles at 1200 baud, and other features.

IV-18-2. **Type and description: Interface, hardwire transmission, HP model 39301A.** The HP model 39301A RS-232-C/V.24 to fiber-optic multiplexer concentrates data from up to 16 computer peripheral devices onto two fiber-optic cables that can transmit the data to a computer 1000 meters away. Terminals, printer/plotters, or data acquisition units may be connected to a host computer with only one pair of these models, 39301A. All 16 data channels are capable of simultaneously transmitting data at a 19.2 kbaud rate or any other lower asynchronous protocol. The use of fiber optics as the transmission medium provides electrical isolation between the computer and the remote devices and also offers immunity from electromagnetic interference such as lightning strikes or noisy electric motors.

a. Model: HP39301A

b. Manufacturer: Hewlett-Packard, OPTO Electronics Div.
640 Page Mill Road
Palo Alto, CA 94304
(Phone) (415) 857-1501

c. Pricing: $2,500.00; cable is $1.75 /ft.

d. Operation: The HP 39301A allows up to 16 computer peripherals to communicate with a host computer via a fiber-optic link. The HP39301A works in pairs, one concentrates the data from the peripheral devices onto the fiber-optic link, while the other separates the data and routes them to the correct port of the host computer. The multiplexer makes maximum use of transmission bandwidth and works much more efficiently than a conventional communications link. Each 39301A multiplexer has eight RS-232-C ports. Each connector has both the primary and secondary data channels

available. This provides for a variety of possible configurations which include: sixteen independent asynchronous channels, eight independent asynchronous channels with handshake control lines, or eight independent synchronous channels with clocks supplied by the peripheral device.

Each primary or secondary data channel may operate any asynchronous protocol up to 19.2 kbaud. Each channel may be used independently with different protocols and data rates without adjustments to the multiplexers. This is possible because the 39301A operates as a time-division multiplexer, sampling each of the 16 data channels at a 200-kHz rate. These sampled data are serialized and transmitted in real time at a rate of 7 Mbaud over an HFBR-3000 series fiber-optic cable connected to the companion 39301A. The serial data are then reconverted to 16 parallel channels and distributed to the respective primary or secondary data channels.

e. Prerequisites: The Hewlett-Packard HFBR-3000 series fiber-optic cable is required to complete the fiber-optic link.

f. Input specifications:

Bit error rate = one error in 10^9 bits
Pulse width distortion = $\pm$6usec max
Range = 1000 meters

g. Output specifications: Same as input specifications.

h. Interfacing: Multiplexer conforms to the EIA standard RS-232-C/V.24.

i. Power requirements and recommendations: 120 VAC at 60 Hz.

j. Compatible equipment: Computer and peripherals that communicate via the RS-232-C/V.24 data format.

k. Software available: Not applicable.

l. Environmental conditions: Storage temperature: -40 to 75 ^{o}C. Operating temperature: 0 to 55 ^{o}C. Humidity: 95% RH.

m. Application information: The model 39301A is useful when peripherals such as data acquisition units, or data terminals are located at a distance of under 1000 meters, but still essentially far away from the host

computer. The multiplexers allow up to 16 of these devices to communicate over a fiber-optic cable eliminating the need for a separate line for each device.

n. Comments: None.

IV-18-3. **Type and description: Modem device, hardwire transmission, intelligent, 110/300/1200 bps.** The Metrabyte MOD-MB 110/300/1200 bps intelligent modem is a complete communications package for IBM PC XT and compatibles. All hardware, software, and accessories needed for installation and use are included in this package. The software included programs the IBM PC XT to function as an intelligent, menu-driven, communications terminal. Using the ten special function keys of the computer, the user may transmit or receive programs or data files over the telephone lines. He can also auto dial voice or data calls from a 60-name telephone directory, send and receive TWX and telexes, and access and log on to publicly accessed data bases such as the Dow Jones News/Retrieval.

a. Model: MOD-MB,110/300/1200 bps intelligent modem

b. Manufacturer: Metrabyte
254 Tosca Drive
Stoughton, MA 02072
(Phone) (617) 344-1990

c. Pricing: $345.00

d. Operation: To install the MOD-MB, the user must plug it into any of the IBM PC XT expansion slots and then connect it to the telephone line with the telephone cable provided. The user may then use the MOD-MB SOFTWARE included with the package to operate the MOD-MB. This software lets the user command the modem from the special function keypad of the computer. In addition, the MOD-MB operates with almost any other communication program, such as CROSSTALK XVI by Microstuf, Inc. It accepts 14 different serial commands, such as DIAL, ANSWER, and END to automatically dial, answer, and hang up calls. The MOD-MB also lets the user select communication

parameters such as speed, parity, and the use of the push-button or rotary type of phones. The MOD-MB may be optioned to operate manually from an exclusion-key type data phone connected to the modem and the telephone line. This data phone facilitates switching of the phone line between the data phone and the modem and lets the user use the same telephone line for voice communication as well as data communication.

e. Prerequisites: An IBM PC XT with minimum 64 k of memory, one disk drive, an 80-column display and PC-DOS 1.1 or 2.0.

f. Input specifications:

Compatibility:	Bell 121A-1200 bps Bell 100 Series - 110/300 bps
Data Rate:	1200 bps character-asynchronous +1%, -2.5%; 110 or 300 ±2.5% asynchronous
Operation:	2-wire full duplex

g. Output specifications: Same as input specifications.

h. Interfacing: The MOD-MB can communicate with any other modem using the standard Bell 212A - 1200 bps protocol or the Bell 100 series - 110/300 bps protocol.

i. Power requirements and recommendations: Power supplied by the computer.

j. Compatible equipment: The IBM PC XT and any other modem using the standard Bell 212A - 1200 bps protocol or the Bell 100 series - 110/300 protocol.

k. Software available: The MOD-MB comes with software provided by Metrabyte, but also operates with many other communication programs such as CROSSTALK XVI from Microstuf, Inc (Refer to "Available Data Collection and Reduction Software", Report 3. para. V-4-2).

l. Environmental conditions: Ambient temperature: 40 to 120 °F. Humidity: 20 to 90% RH. noncondensing at 75 °F. Altitude to 10,000 ft max.

m. Application information: The MOD-MB is used to give the IBM PC XT the capability to transmit and receive files over the telephone lines, send and receive TWX

and telex, auto-dial voice or data calls, and log on to publicly accessed data bases such as the Dow Jones News/Retrieval.

n. Comments: None.

IV-18-4. Type and description: **Transmission devices, hardwire.** The Moore Industries models MVT, PTT, RBT, SGT, and TCT are 4-wire transmitters that convert the output of popular types of sensors to any standard process current or voltage output. The MVT is used with sensors whose full-scale output is less than 300 mV. The PTT is used with sensors that use the wiper of a potentiometer as the data signal. The RBT is used with any 2-, 3-, or 4-wire RTD. The SGT is used with sensors that use a resistive strain gage as the data signal. The TCT is used with type E, J, K, R, S and T ISA rated thermocouples. All models feature complete electrical isolation of the input, output, and power supply along with high input impedences (typically above 10 megaohms). All models are available in a variety of housings which include a standard housing, a printed circuit board plug-in for high density applications, and an explosion-proof housing for harsh environmental applications.

a. Model: MVT, PTT, RBT, SGT, and TCT

b. Manufacturer: Moore Industries
16650 Schoenborn Street
Sepulveda, CA 91343
(Phone) (818) 894-7111

c. Pricing: MVT: $430.00
PTT: $410.00
RBT: $435.00
SGT: $445.00
TCT: $440.00
All models in explosion-proof housing

d. Operation: All models may be specified to output either three ranges of current outputs which include 1-5 mA, 4-20 mA and 10-50 mA, or a voltage output range of 1-5 VDC. Each model has a zero adjustment that allows the user to compensate for small voltage offsets

on the input and also have a span adjustment that allows the user to set the full-scale value of the output to correlate with the expected full-scale value of the input. The PTT, RBT, and the SGT provide gage excitation. The RBT has lead length compensation and the TCT is available with linear compensation of the specified type of thermocouple. To operate these devices, the user merely has to connect the gage to the input, set the span and zero adjustments to the desired settings, and connect the measuring device to the output.

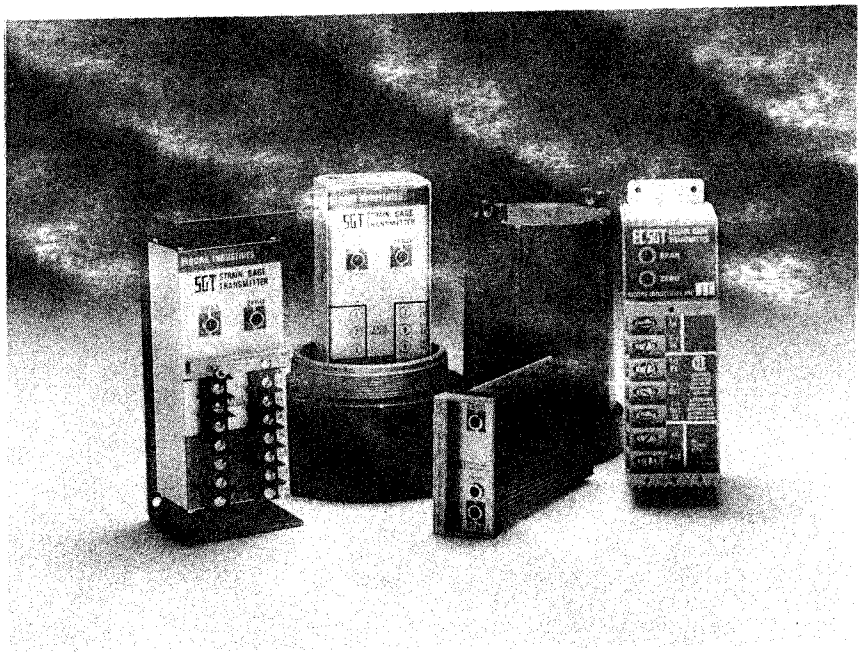

SGT STRAIN GAGE TRANSMITTER (PHOTO COURTESY OF MOORE INDUSTRIES)

e. Prerequisites: A voltage or current measuring device.

f. Input specifications:

Model MVT Input ranges: 0-5 through 10 mV
0-10 through 20 mV
0-20 through 40 mV
0-40 through 80 mV
0-80 through 160 mV
0-160 through 320 mV

Model PTT: Input - Potentiometer, standard 3-wire 0-100-ohm through 0-10,000-ohm range.

Model RBT: Resistance bulb sensor: copper, nickel, or platinum, 2-, 3-, or 4-wire type. Sensor current = 1 mA, maximum.

Input ranges:	0-5 through 10-ohm change
	0-10 through 20- "
	0-20 through 40- "
	0-40 through 80- "
	0-80 through 160- "
	0-160 through 320- "
	0-320 through 640- "

Model SGT: Input - Strain gage; standard 350-ohm bridge or transducer with a gage factor of from 1 to 3 mV/V.

Model TCT: Input - Thermocouple - All standard ISA types.

g. Output specifications:

Current:	1-5 mA	into	0-4800-ohm	load	
	4-20 "	"	0-1200- "	"	
	10-50 "	"	0-480- "	"	

Voltage: 1-5 VDC standard into 20-k ohm, minimum

Ripple: 10 mV P/P at maximum span and maximum load resistance.

Load Effect: ±0.01% of span from 0 to maximum load resistance (current output).

Frequency response: 5 Hz (3-dB point).

h. Interfacing: These devices are designed to interface standard types of transducers to data collecting instruments that handle standard process current and voltage outputs, such as 4-20 mA current loop.

i. Power requirements and recommendations:

Voltage options include: 24 VDC, 45 VDC, or 117 VAC at 60 Hz

Consumption: 5 W. nominal

j. Compatible equipment: Standard transducers and data collecting instruments that handle standard process current and voltage outputs.

k. Software available: Not applicable.

l. Environmental conditions: Operating temperature: -29 to 82 deg C.

m. Application information: These devices are used to interface standard transducers, such as strain gages, thermocouples, potentiometers, and RTDs to data collecting instruments that accept standard process current and voltage outputs such as 4-20 mA current loop.

n. Comments: None.

IV-18-5. Type and description: Modem, hardwire transmission device, fiber optic. The OPTELECOM model 4121 is a full duplex fiber-optic modem. A pair of these modems plus the interconnecting cable provides high-speed, error-free data communication between data terminals, computers, and other common data communication equipment. This fiber-optic modem provides asynchronous serial data communication at 100 kbaud up to one kilometer over OPTELECOM standard dual fiber-optic cables. Pairs of these modems may be used as repeaters to obtain longer distances.

a. Model: 4121

b. Manufacturer: OPTelecom
15940 Luanne Drive
Gaithersburg, MD 20877
(Phone) (301) 840-2121

c. Pricing: $160.00

d. Operation: The transmit section of these modems converts standard RS-232-C data signals to optical pulses for transmission over all dielectric fiber-optic cables. In the receiver section, the process is reversed. The model 4121 also provides the commonly used handshake responses used by most data communication equipment. Three status lights provide a visual check that power is ON and that data are being transmitted and/or received. These modems are available in both the DB25P (male) version and the DB25S (female) version. DC power may be supplied by

either the Optelecom model 4110 PS power supply or by the host system via the DP25 connector.

e. Prerequisites: Data communication equipment that uses the RS-232-C data format.

f. Input specifications: Signal power of 2 uW is required.

g. Output specifications: Wavelength = 820 mm. Signal power = 40 uW into QK cable and 10 uW into GK cable.

h. Interfacing: The model 4121 is used to interface data communication equipment that uses RS-232-C over long distances.

i. Power requirements and recommendations: 11.5 to 13 VDC at 95 mA.

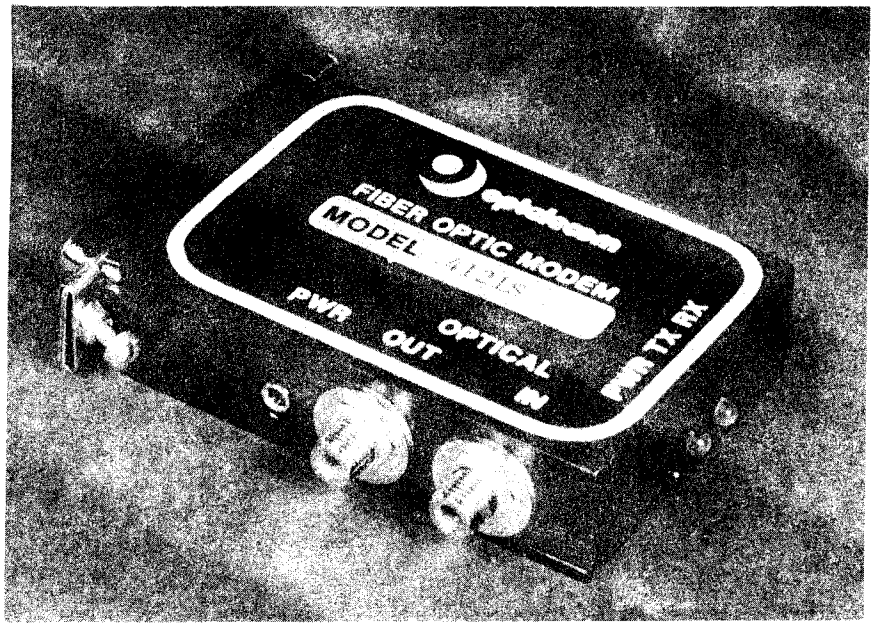

4121 FIBER OPTIC MODEM (PHOTO COURTESY OF OPTELECOM)

j. Compatible equipment: Any data communication equipment using the RS-232-C data format.

k. Software available: Not applicable.

l. Environmental conditions: Operating temperature: -20 to 50 °C. Humidity: 0 to 90% RH.

m. Application information: The model 4121 fiber-optic modem can provides high-speed, error-free communication over long distances using a single cable between any device using the RS-232-C data format. This provides a reliable link between remote data acquisition units or terminals to a host computer located some distance away.

n. Comments: None.

IV-18-6. Type and description: **Modem.** The model P-212ST modem is used for intraoffice and long distance data communication. It links computers to terminals, and computers to other computers over dial-up telephone lines. The model P-212ST modem is compatible with other modems that emulate the Bell 103, 212A, or the Hayes smart modem. It connects to standard single-line and multiline telephone systems and offers full duplex serial asynchronous data transmission. This modem is a desk top unit that features automatic dialing/answering, but also permits manual dialing/answering.

a. Model: P-212ST

b. Manufacturer: Prentice Corporation
266 Caspian Drive
Sunnyvale, CA 94088-3544
(Phone) (408) 734-9810

c. Pricing: $325.00

d. Operation: Modems are used in pairs to provide long distance serial asynchronous communications between computers and peripherals . Each modem is connected to the RS-232-C port of a computer, printer, multiplexer, terminal or other peripheral. The modems are connected to each other through a dial-up telephone line. One modem receives information on its RS-232-C port and converts it into a form that is transmittable over a phone line. The other modem decodes the information, and sends it to the receiving peripheral through its RS-232-C port. The P-212ST modem has dual data rates of either 300 baud or 1200 baud. It is compatible with major communications software packages.

e. Prerequisite: A standard communication system consisting of: a computer with an EIA RS-232-C port and supporting communication software, a dial-up telephone line, and another compatible modem.

f. Input specifications:

Modem compatibility:	Bell 103 and 212A Hayes Smart modem
Operation:	Serial, asynchronous
Modes:	Full duplex
Parity:	Mark, space, odd, even, none (auto sensed)
Data rate:	0-300 baud, 1200 baud
CHARACTER FORMAT	
Data mode:	1200 baud: 10-bit characters, including 1 start & 1 stop bits, 11-bit char. including 1 start and 2 stop bits 0-300-baud modem transparent to character format.
Command mode:	110, 150, 300, or 1200 baud 9-, 10-, or 11-bit character lgth, including 1 start and 1, 1 1/2, or 2 stop bits

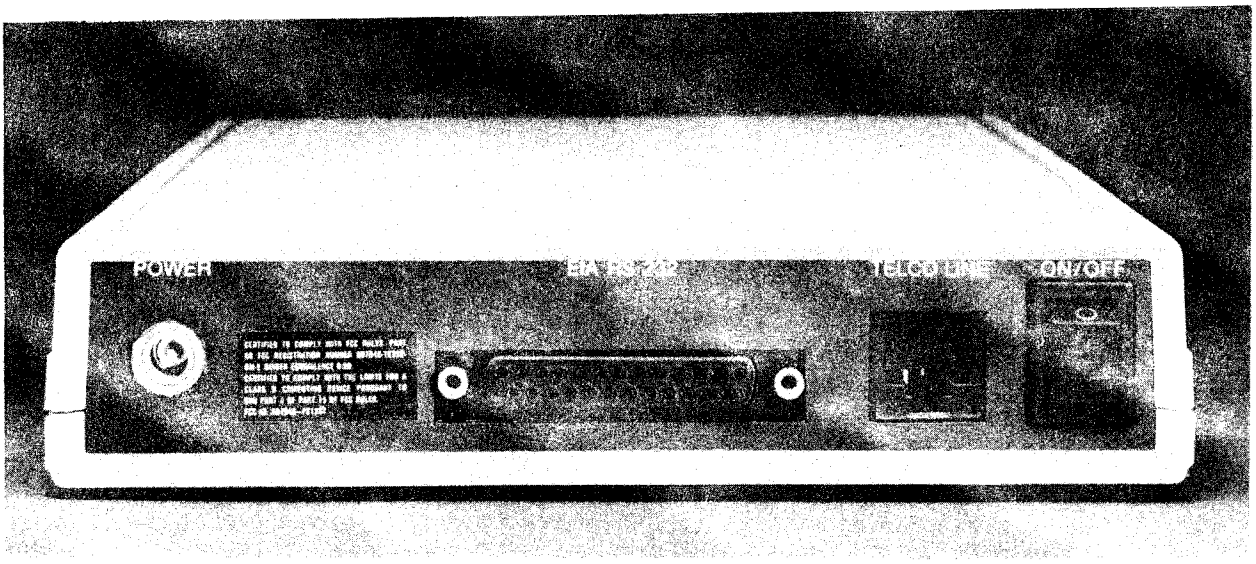

P-212ST MODEM (PHOTO COURTESY OF PRENTICE CORP.)

g. Output specifications: Same as input specifications.

h. Interfacing: The model P-212ST interfaces to computers and peripherals via an EIA RS-232-C port.

i. Power requirements and recommendations: 90 to 132 VAC, 60 Hz, 3 watts (power supply). 15 VDC, 200 mA (modem).

j. Compatible equipment: This modem is compatible with Bell 103, 212A and Hayes Smart modem products.

k. Software available: Not applicable.

l. Environmental conditions:

Temperature: (operating)	0 - 50 °C
Humidity: (operating)	90% RH.
Temperature: (storage)	-20 - 70 °C
Humidity: (storage)	90% RH. (noncondensing)

m. Application information: The model P-212ST modem is used to link computers to peripherals, or computers to other computers over dial-up telephone lines.

n. Comments: None.

IV-18-7. **Type and description: Transmission device, hardware.** The CTS-420 position transmitter system is a 2-wire current loop position transmission system especially suited for position indication. Linear position sensors are available in six different ranges covering 0-0.25 inch to 0-10 in. All models provide 4-20 mA output into 2-wire current loops. The instrument features a long operating life, a rugged construction, and a wide operating temperature range which makes it especially suited for applications in remote harsh environments.

a. Model: CTS-420

b. Manufacturer: Schaevitz Engineering
U.S. Route 130 and Union Avenue
Pennsauken, NJ 08110
(Phone) (609) 662-8000

c. Pricing: $550.00 to $950.00, depending upon range of sensor

d. Operation: The Schaevitz CTS-420 position transmitter consists of a matched package of differential transformer position sensors and the electronics to provide a 4-20 mA current output. The LVDT linear position sensor in the CTS-420 system is hermetically sealed and uses a noncontacting movable core, so nothing exists to mechanically wear out. The electronic portion of the model CTS-420 is contained on a 3-in. x 5-in. circuit board for installation by the user. The zero and span adjustment controls and all external connections are mounted on the board. The electronic module may be located up to 25 ft away from the sensor. A splashproof casing is optionally available.

e. Prerequisites: A 4-20 mA current process control input on the user data acquisition system.

f. Input specifications:
Displacement Range:

Optional:	0 to .25 in.
	0 to 0.5 in.
	0 to 1 in.
	0 to 2 in.
	0 to 4 in.
	0 to 10 in.

g. Output specifications:

Output:	4 to 20 mA
Linearity:	0.3% of full-scale for 0.25- through 1-in. model
	0.5% of full-scale for 2- through 10-in. model
Stability:	0.05% of full-scale

h. Interfacing: The CTS-420 position transmitter system may be interfaced to any device capable of measuring a 4-20 mA current output.

i. Power requirements and recommendations: Supply voltage: 10 to 36 VDC

j. Compatible equipment: A 4-20 mA current output is an industry standard. Most manufacturers of data loggers offer interfaces to handle those types of devices. A wide selection may be used with this device.

k. Software available. Not applicable.

l. Environmental conditions:
Operating temperature: 40 to +200 °F
Thermal coefficient of sensitivity: ± 0.02%/°F, maximum.

m. Application information: This device is especially suited for monitoring changes in displacement in remote, harsh environments. Its standard 4-20 mA output allows it to be operated at a great distance from the measuring device.

n. Comments: None.

Telemetry Transmission Devices

IV-19-1. Type and description: **Transceiver, telemetry transmission, remote UHF.** The remote UHF transceiver is a data telemetry option that may interface directly with any GEMS data acquisition unit, such as the TerraTrac data logger (para. IV-15-3). Typical applications involve several radio links transmitting data from different types of instrumentation where cable installation are not feasible. The data may be transmitted to one central station where they may be entered into and operated upon by a computer.

a. Model: RU-1330

b. Manufacturer: Geotechnical Engineering and Mining Services, Inc. (GEMS)
190 West Rafferty Gardens, Unit 8
Littleton, Colorado 80120
(Phone) (303) 794-1912

c. Pricing: $1020.00

d. Operation: The remote UHF transceiver provides a radio link between any GEMS data acquisition system and a central processing station. This radio link transmits up to 25 miles depending upon the terrain; best performance occurs in line-of-sight conditions. Smart relay stations are available to relay data from several transmitting monitors for retransmission to the central location. In rugged terrain, this smart relay station is used to transmit around otherwise impeding land features.

e. Prerequisites: A GEMS data acquisition unit and a computer with an EIA RS-232 data port.

f. Input specifications:

Frequency band - UHF	400-470 MHz
Frequency stability	±0.0007%
Sensitivity (12 dB Sinad)	0.35 mV
Intermodulation	-60 dB
Selectivity (EIA Sinad)	-70 dB
Maximum data rate	1200 baud

g. Output specifications:

Frequency band - UHF	400-470 MHz
Frequency stability	±.0005%
RF power output	1 to 4 W
Spurious and harmonics	-50 dB
Duty cycle	Continuous
Maximum data rate	1200 baud

h. Interfacing: The remote UHF transceiver is designed to connect the output of a GEMS data acquisition unit to the EIA RS-232-C port of a computer.

i. Power requirements and recommendations: 12 VDC

j. Compatible equipment: Any GEMS data acquisition unit such as the TerraTrac data logger or the piezometer data acquisition unit.

k. Software available: IDBS-8000 (refer to "Available Data Collection and Reduction Software", Report 3., para. V-1-18).

l. Environmental conditions:

Operating Temperature:	-10 to 50 °C
Storage Temperature:	-40 to 55 °C
Humidity:	0 to 95% RH noncondensing

m. Application information: Typical applications include several radio links transmitting data from different types of instrumentation located in areas where trenching and cable installation are not feasible.

n. Comments: None

IV-19-2. Type and description: **Satellite, telemetry transmission, GOES.** GOES, an option for the GEMS data acquisition units, which is also an acronym for the geostationary operational environmental satellites may interface directly with any of GEMS data acquisition units such as the TerraTrac data logger (para. IV-15-3). This system allows data collected from instruments at one location to be transmitted via satellite to a data reduction center at another location. Therefore, one central processing facility may quickly access the data provided

by the instrumentation at any remote facility that is connected to this system.

a. Model: GOES

b. Manufacturer: Geotechnical Engineering and Mining Services, Inc. (GEMS)
190 West Rafferty Gardens, Unit 8
Littleton, Colorado 80120
(Phone) (303) 794-1912

c. Pricing: $3840.00 includes antenna and surge protection

d. Operation: The GEMS GOES satellite data telemetry option provides a data link via satellite between any GEMS data acquisition system and a central processing station. Two GOES provide a data link that may be accessed essentially by all of the western hemisphere, excluding polar regions. Private firms and government agencies may be contracted to control and receive the data. The data are then relayed to a computer where they may be analyzed.

e. Prerequisites: A GEMS data acquisition unit and a data receiving station.

f. Input specifications: Not applicable.

g. Output specifications:

Frequency Range	401.7010-402 MHz
Channel Spacing	1.500 kHz
Domestic GOES DCS Channels	1-199
International GOES DCS Channels	200-266

h. Interfacing: The GOES data telemetry option is designed to connect the output of a GEMS data acquisition unit to a computer via a satellite link.

i. Power requirements and recommendations:

Input voltage range	+10.5 to +15.0 VDC
Input current, main power input	
Quiescent mode	20 mA
Standby mode	600 mA
Transmit mode	(12.5 VDC in)
Power output 2 W	1.5 amp
Power output 10 W	3.1 amp

j. Compatible equipment: Any GEMS data acquisition unit such as the TerraTrac data logger (para. IV-15-3) or the piezometer data acquisition unit (para. IV-15-5).

k. Software available: Not applicable.

l. Environmental conditions:

Operating temperature:	-40 to +55 °C
Storage temperature:	-55 to +80 °C
Relative humidity:	0-95% RH. (noncondensing)

m. Application information: Typical applications include providing a data link between the instrumentation of a remote facility and a central processing station when conventional hardwire transmission systems are undesirable.

n. Comments: The U. S. Army COE presently operates two ground-based receiving stations from the GOES.

IV-19-3. Type and description: **Transmission device, telemetry.** This RF modem device uses long range radio transmission to transfer data between computers or data channels. The unit is essentially a full- or half-duplex modem that transmits by radio instead of telephone lines. The model 1200 is EIA RS-232-C compatible with a data transmission rate of 1200 baud. All that is required for operation is a 120 VAC or battery power source and a data signal source. This unit allows data to be collected at remote locations and transferred to a host computer, via the EIA RS-232-C data format, without the need of running cables or telephone lines to the remote area. The unit may also be used as a repeater for applications where the distance is too great for the transmission range of just one device.

a. Model: RDS 1200

b. Manufacturer: Repco, Incorporated
2421 N. Orange Blossom Trail
Orlando, FL 32804
(Phone) (305) 843-8484

c. Pricing: Half duplex - $1528.00
Full duplex - $1900.00

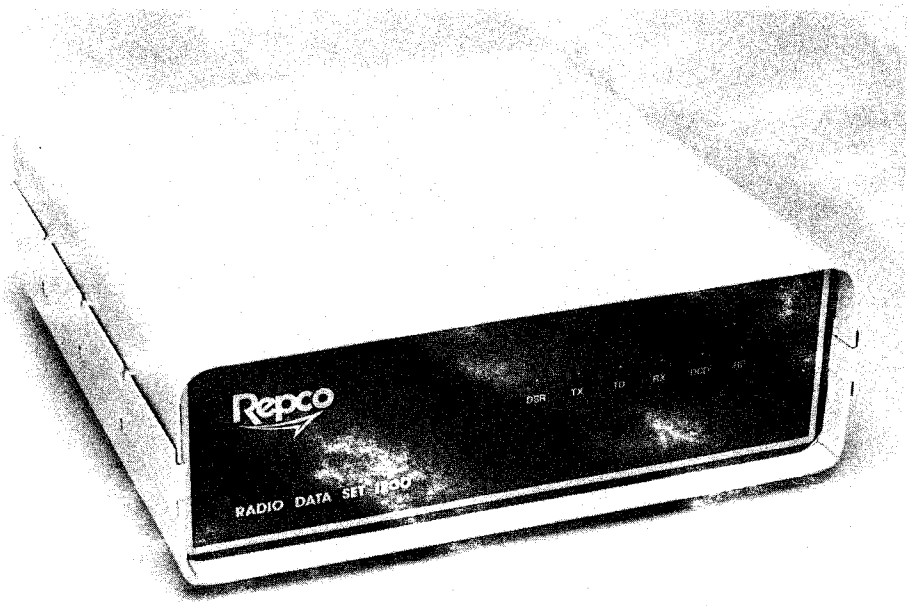

RDS 1200 RADIO DATA SET (PHOTO COURTESY OF REPCO, INC.)

d. Operation: The model RDS 1200 telemetry device is used in pairs. One unit is connected to the EIA RS-232-C port of a computer while the other is connected to the EIA RS-232-C port of the peripheral. Wireless data communication between the peripheral and computer is thus achieved. The model 1200 unit uses a 1- to 2-watt transmitter and uses a process known as frequency shift keying to code the digital data. The unit may be powered by 120 VAC or a 12-VDC battery. It may also be used as a repeater for applications where the transmitting distance is out of range of just one unit.

e. Prerequisites: Computer and peripherals with EIA RS-232-C compatibility.

f. Input specifications:

Receiver:

Sensitivity:	107 dBm (1.0 uV) for BER> 1x103 over the voltage and temperature range.
Typically:	115 dBm @ 150-174 MHz 113 dBm @ 450-475 MHz 112 dBm @ 928-960 MHz
Decoder type:	PLL FSK demodulator

	Carrier attack time:	<10 msec
	Turnaround time: (Xmit/receive)	10 msec, maximum
*	Compliances:	FCC part 15, EIA RS-316B. and RS-232-C as applicable.

g. Output specifications:

Transmitter:

Power output:	2 W 100% duty cycle for AC power(1 W minimum for 12.0 VDC battery backup)
Frequency stability:	+5 ppm 150-174 MHz +5 ppm 450-475 MHz +5 ppm 928-960 MHz +1.5 ppm 928-960 MHz with high stability option.
RF spectrum:	1200 baud, one zero pattern at data input.
Modulation type:	FSK
Harmonic distortion:	5% maximum
FSK tone amplitude balance:	<0.5 dBm between mark and space

h. Interfacing: EIA RS-232-C bit serial data format.

i. Power requirements and recommendations:

Voltage:	120/240 VAC or 12 VDC battery

j. Compatible equipment: All computers and peripherals that use the standard EIA RS-232-C data format.

k. Software available: Not applicable.

l. Environmental conditions:

Temperature: (operating)	-30 to 60 °C
Temperature: (storage)	-40 to 75 °C

m. Application information: The RDS telemetry device is useful for applications where a remote data-taking device needs to communicate with a host computer, but is located where cable cannot be easily run. This device connects the peripheral and the computer via FM radio channels. The model 1200 may also be used as a repeater.

n. Comments: None.

IV-19-4. Type and description: **Transmitter, RF, FM(20F3)** emission for telemetry use RF receiver, dual conversion.

a. Model: TX-200, transmitter; RX-200, receiver

b. Manufacturer: Sprengnether Instruments, Inc.
4150 Laclede Avenue
St. Louis, MO 63108
(Phone) (314) 535-1682

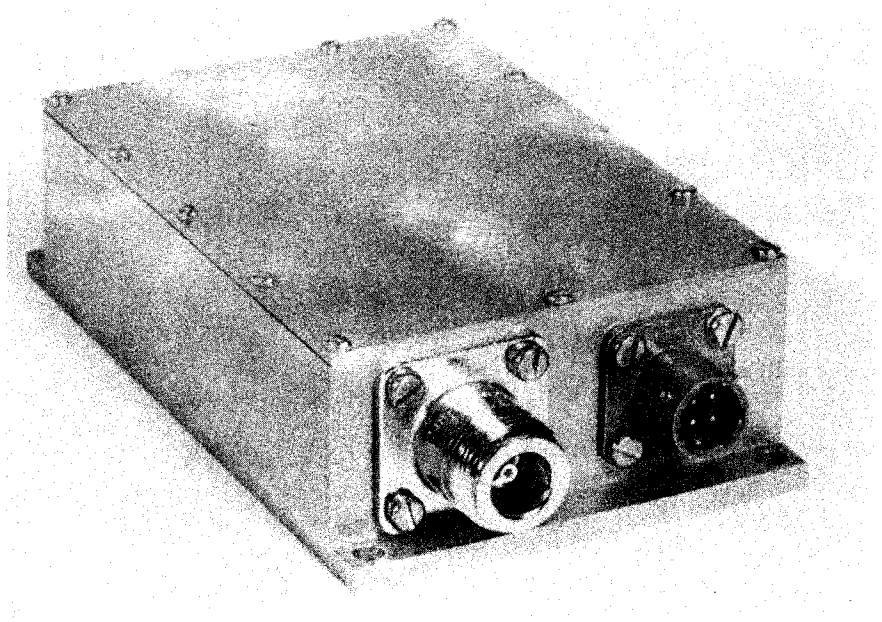

RX-200/TX-200 RF TRANSMITTER (PHOTO COURTESY OF SPRENGNETHER)

c. Pricing: $750.00, TX-200; $750.00, RX-200

d. Operation: The signal output from a telemetry VCO or discriminator is applied to the TX-200 transmitter. A 1.0-V RMS produces a ±1-kHz deviation or 100% modulated RF output. The output of the transmitter is applied to a specially designed FM antenna with a bandwidth of approximately 150-460 MHz, and a gain of 9 dB.

The receiver may use the same type of antenna as the transmitter. The receiver output is applied to the digital event recorder. A typical Sprengnether system includes a TC-10 and/or TC-20 and/or TC-30 connected to

the TX-200. See paragraph IV-19-5 for description of these components. The RX-200 receiver may be connected to the DR200 seismic recorder described in paragraph II-12-4.

e. Prerequisites: Requires model 5YA antenna or equivalent.

f. Input specifications:
(Transmitter) Modulation: ±5 kHz limited for 100% @ 1 kHz(1.0 V RMS)
Bandwidth: 300 Hz-3 kHz bandwidth, 0.2-1% max
Distortion: @1 kHz, 0.2% @2/3 deviation
Impedance: 100 k ohm (receiver)
Sensitivity: 25 dB S+N/N @1 uV typical; 10 dB S+N/N @0.5 uV minimum (5-kHz deviation)

g. Output specifications: (Transmitter)
Power: 27 dB (500 mW) maximum factory preset
Impedance: 600 ohms, Frequency: 150-460 MHz crystal-controlled (receiver)
Selectivity: 25 dB S+N/N@+30 kHz(600-ohm audio output)
80 dB @ ±40 kHz
Frequency: 150 MHz-460 MHz crystal controlled

h. Interfacing: The transmitter must be interfaced to signal conditioners with appropriate gain limits and frequency bandwidths. The receiver may be connected to any data acquisition system. The receiver is directly compatible with Sprengnether model DR-200 digital event recorder. These are high level voltage signals.

i. Power requirements and recommendations: Transmitter: 10-15 VDC @50 mA for 100 mW RF output receiver: 10-15 VDC @22-25 mA max. Both have reverse polarity protection and internal regulation.

j. Compatible equipment: Not applicable.

k. Software available: Not applicable.

l. Environmental conditions:
Temperature: -30 to +60 °C
Relative humidity: 90%, RH. moisture and dust proof

m. Application information: The TX-200 and RX-200 may be used not only with seismic data systems, but may be used as a stand-alone data collection unit from remote areas.

n. Comments: Optional solar panel power systems may be provided.

IV-19-5. Type and description: Telemetry, voltage controlled oscillator (VCO). These are low cost, low power, high quality and versatile audio frequency telemetry components. Available in standard constant bandwidth channels.

a. Model: TC-10

b. Manufacturer: Sprengnether Instruments, Inc.
4567 Swan Avenue
St. Louis, MO 63110
(Phone) (314) 535-1682

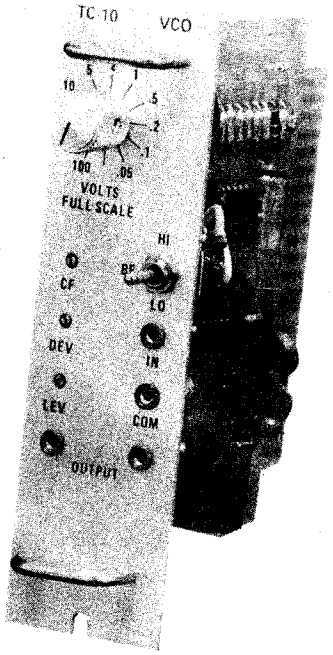

TC-10 TELEMETRY VCO (PHOTO COURTESY OF SPRENGNETHER INST.)

c. Pricing: $417.00

d. Operation: Eleven sensitive ranges, from 50 mV to 100 V full-scale deviation, are selectable on the front panel to facilitate system gain adjustments or multi-gain operations. Upper and lower and edge deviations may be affected from a front panel switch for ease in system setup and servicing. Center frequency, deviation, and output level may be monitored and

adjusted from the front panel. Output is transformer coupled for flexible installation.

e. Prerequisites: DR-200 seismic recorder, (Refer to paragraph II-12-4).

f. Input specifications: Bandwidth channels from 340 to 3060 Hz with ±125-Hz deviation. (340, 680, 1020, 1360, 1700, 2040, 2380, 2720, 3060) Other channels and deviations available. When used with the companion TC-20 discriminator, 60 dB dynamic range (peak measurement) is achieved in the 0-10-Hz bandwidth.

g. Output specifications: Nominal 1 V rms into 600-ohm adjustable ±6 dB, transformer coupled.

h. Interfacing: Matches the Sprengnether AS-110 amplifier in size and connector configuration. Also adapts to the TC-20 and TX-200 transmitters.

i. Power requirements and recommendations:
±10 to ±15 VDC @ 15 mA
Sprengnether signal conditioning systems are battery operated.

j. Compatible equipment: TC-30 telemetry multiplexer for multiplexing up to 9 different FM carriers on one data line. Also TC20 and AS110.

k. Software available: Not applicable.

l. Environmental conditions: Temperature: -30 to 60 °C Humidity: 95% RH.

m. Application information: The TC-10 VCO represents state-of-the-art in circuit design, user convenience, and low price, satisfying virtually all requirements for high quality audio frequency FM telemetry.

n. Comments: The TC-10 VCO satisfies requirements for FM geophysical data telemetry in the frequency range DC to 50 Hz by telephone, land line, or by radio link.

IV-19-6. Type and description: **Telemetry device, remote computer series.** This device is a functional module series of microcomputers, input/output, and communication peripherals for use in remote environments. The series is physically,

electrically, and functionally modular in design, providing a flexible method for configuring and expanding a system to fit the user's requirements. The telemetry modules which are suitable include the following:

Satellite - GOES; ARGOS
Radio - UHF; VHF
Telephone - Leased line; dial up; direct cable

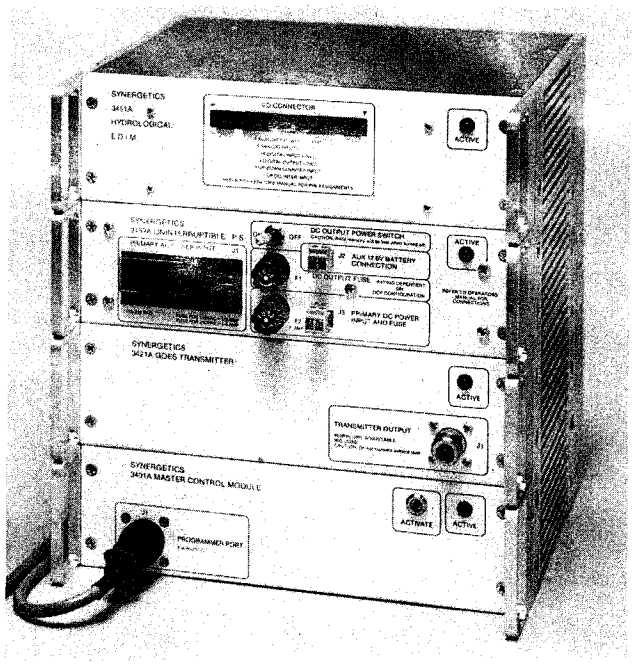

3400 SERIES REMOTE CONTROLLER (PHOTO COURTESY OF SYNERGETICS)

a. Model: 3400 remote computer series:

3401A master control module
3421A 10-watt GOES transmitter
3426A 40-watt GOES transmitter
3422A direct-connect telephone modem module
3423A radio communication module (VHF or UHF)
3425A private-line telephone modem module
3427A ARGOS transmitter
3451A sensor interface module
3452A general purpose input/output module
3453A applications module
3489A uninterruptible power supply
Model - environmental enclosure (NEMA 4 and 12 available)
3419B programming terminal

b. Manufacturer: Synergetics International, Inc.
P.O. Box E, 6330 Gunpark Drive
Boulder, CO 80306
(Phone) (303) 530-2020

c. Pricing: 3401A, $873.00
3421A, $1940.00
3426A, $2425.00
3422A, $1000.00
3423A, $800.00
3425A, $900.00
3427A, $1200.00
3451A, $679.00
3452A, $1000.00
3453A, $500.00
3489A, $387.00
Environmental enclosure, $200.00
3419B, $1290.00

d. Operation: The 3401A master control module is a self-contained, general purpose computer and is the core module for all 3400 series configurations. This unit functions on a stand-alone basis, or as a central controller and processor in conjunction with 3400 series I/O and communication modules. Features include the S-FORTH operating system, expandable PROM/RAM memory, a programmable calendar/alarm clock, and S-34 controller port, and an RS-232-C operator port. The S-34 bus is similar to the IEEE-488 instrument bus, but is implemented with low power CMOS technology. The S-34 bus is used as the general purpose intermodule communications standard to link all modules together under control of the master control module. The master control module may be programmed using a remote terminal or locally using the RS-232-C port.

The program controls the data acquisition and the data transmission. It also enables the user to transmit processed data rather than raw sensor outputs. English language commands with extensive data checking routines reduce programming and setup time. The master control module may be user-programmed to convert raw sensor data into engineering units at the time data are collected, make changes in data collection and transmission times based on content of data collected (in random-reporting modes), condense data using a wide range of mathematical calculations, time-tag data, transmit data in a flexible format, and much more.

The model 3451A module available features eight analog input channels, sixteen digital input lines, four digital output lines, one up/down counter, one up counter, and one switched auxilliary power output.

The model 3452A module available features 32 programmable inputs. The inputs may be programmed to function as single-ended analog channels, differential analog channels, digital inputs, or frequency. Any sequence of inputs may be programmed. Two reference voltage outputs are available, 1.25 VDC and 5.00 VDC. Four frequency inputs, eight controller outputs, and one up counter.

The model 3421A GOES is user-programmable to transmit on any of the 266 GOES channels in any mode (self-timed, random reporting, interrogated, or alert). Both short and long preamble formats are selectable. Status outputs are provided for continuous monitoring of forward and reflected power output, lock status, channel selected, synthesizer on, power amplifier on, and failsafe protected power. All clock timing, manchester encoding, and modulation is performed by the 3421A. Output power is adjustable from 2 to 12 watts and is stabilized over all supply voltage, antenna VSWR and environmental conditions by an active regulator. The model 3426A output is 40 W.

The model 3422A direct connect modem is FCC type-certified for connection to the switched telephone network. Three options are available: 300 baud (Bell 103 type), 1200 baud (Bell 202 type), and 300/1200 baud, selectable under program control. All three options feature auto-answer, auto-originate, and selectable character length, parity and number of stop bits. Lightning/surge protection circuitry is also standard.

The model 3425A private line modem is similar to the 3422A, but features a 4-wire, transformer-coupled interface. This modem is suitable for use with leased telephone lines, private microwave links, commercial satellite links and UHF/VHF radio links.

The model 3489A uninterruptible power system (UPS) includes a built-in 8-amp-hr/12.6 V sealed lead-acid battery, high efficiency switching regulator, and a unique temperature compensated charger to maintain peak capacity under all temperature and charge conditions. The system may be operated from 117-V or 230-V utility power, or 16-32 VDC (from solar panels, wind generators, etc.). The internal capacity of the

3489A is suitable for operating a system up to two months without external power. Additional external battery capacity, up to 80 amp-hr total, also can be added at the field site, to extend uninterrupted service for heavy loads.

The model 3423A radio communications module provides point-to-point radio communication of digitally encoded data. A universal interface between the S-34 bus and a FCC approved commercial radio or transceiver, either VHF or UHF. FCC frequency allocations, output power limitations, and other requirements determine the RF characteristics of the 3423A for a particular application.

e. Prerequisites: None.

f. Input specifications:

3451A sensor interface module:

8 analog input channels (0-5 VDC, differential)
16 digital input lines, 0-5 V, 0-7.5 V, or 0-12 V
1 up/down counter channel
1 up counter channel

3452A general purpose input/output module

32 programmable inputs
- 32 single-ended analog channels
- 16 differential analog channels
- AC voltage inputs
- DC voltage inputs
- ±0-100 mV
- ±0-5 V
- Frequency (up to 60 kHz)
- 32 digital input, 0-5 V, 0-7.5 V, or 0-12 V
- 4 frequency input
- 1 up counter

g. Output specifications:

3451A sensor interface module

4 digital output control lines, 0-5 V,0-7.5 V or 0-12 V
1 switched auxilliary power output, 12 VDC at 500 mA

3452A general purpose input/output module

8 digital output control lines, 0-5 V,0-7.5 V or 0-12 V
2 reference voltage outputs, 1.25 VDC and 5.00 VDC

h. Interfacing: RS-232-C bit serial data format.

i. Power requirements and recommendations: Voltage = 117 VAC or 230 VAC or 16-32 VDC, unregulated. Optional uninterrupted power system model 3489A allows continuous operation, up to two months without external power (depending on load).

j. Compatible equipment: The Army Corp of Engineers currently operates two GOES direct readout ground stations for receiving transmissions from the GOES satellite. These stations may be used for any additional channels added to the GOES system.

k. Software available: S-FORTH programming language.

l. Environmental conditions: Operating temperature: -40 to 55 °C. Packaging: System available in NEMA 4 or NEMA 12 packages.

m. Application information: This system is recommended for remote, harsh environments where cabling or access by personnel is not practical. The analog inputs do not provide much signal conditioning and may not be appropriate for some sensors. The system may be used as a telemetry system by using a data logger as a front-end and having the RS-232-C output tied into the modem module.

n. Comments: None.

IV-19-7. Type and description: **Telemetry transmission device.** The Weather Measure WEATHERTronics model 1760 data link radio transceiver is a radio telemetry system that is suited for use in remote areas where wire or phone line installation would be impractical. Each unit is a self-contained transceiver, consisting of a transmitter, a receiver, and a frequency shift keying (FSK) converter. The FSK converter and the transceiver act together as a wireless modem. This allows devices that

communicate via a serial data protocol, such as EIA standard RS-232-C, to communicate with each other without a cable or phone line connections.

a. Model: 1760

b. Manufacturer: Weather Measure WEATHERTronics
Division of QUALIMETRICS, Inc.
P.O. Box 41039
Sacramento, CA 95841
(Phone) (916) 481-7565

c. Pricing: Model 1760-A: $2,415.00
Model 1760-B: $1,950.00

d. Operation: The data link radio transceiver is designed to be used in pairs. These radios accept the serial data output, such as RS-232-C, of computers and their peripherals. The transceiver FSK converter converts the incoming digital signal into an FSK signal, which is then modulated to an RF signal for transmission. At the receiver end, the RF signal is demodulated to FSK and then reconverted to a digital signal for output. A selection of frequencies is available, allowing VHF-to-UHF operation. Each radio system must be configured specifically for the application regarding operating frequency, transmitting power output, and antenna type. Sales engineers are available for assistance. Also, an FCC license for radio operation must be obtained by the user.

e. Prerequisites: Appropriate antenna must be chosen for each application.

f. Input specifications:
Input format: Serial, NRZITTL
Input levels:
V low: 0.5 to 0.0 VDC
V high: 2.4 to 5 VDC
I high: 40 uA max. sink
Carrier frequency: 2100 Hz mark, 1300 Hz space
Baud rate: 1200 standard; 300 optional

g. Output specifications:

Ranges: 150-174 MHz, 450-470 MHz, or 928-960 MHz
Power output: 1.0 to 2.0 w, adjustable
Bandwidth: ±7.5 kHz
Output format: Serial, NRZITTL, positive logic

Output levels:

V low:	0.5 to 0.0 VDC
I low:	5 mA max. sink
V high:	5.2 to 2.4 VDC
I high:	700 uA source

h. Interfacing: The model 1760 data link radio transceiver is designed to be interfaced with computers and peripherals that use a serial data code to communicate with each other.

i. Power requirements and recommendations: Input voltage: 12.5 VDC ±10%. Transmitter current drain: 50 mA max. at 1.0 W.

j. Compatible equipment: Any computer, data acquisition unit, or computer peripheral that communicates using the RS-232-C serial protocol at a baud rate of 1200 or 300 may be used with this system.

k. Software available: Not applicable.

l. Environmental conditions: Operating temperature: -30 to 60 °C. Model 1760-A comes in a NEMA 4 rated outdoor enclosure.

m. Application information: The data link radio transceiver is suited for applications where a remote data acquisition unit needs to communicate with a host computer via RS-232-C and wire or phone lines are impractical or impossible. A pair of these transceivers may be used as wireless modems to establish a data link between these devices. The model 1760-B is a 19-in. rack mountable unit.

n. Comments: None.

Environmental Enclosures

IV-20-1. Type and description: Enclosure, hazardous location. These enclosures are watertight, explosion-proof, dust, and ignition proof.

a. Model: EJB series

b. Manufacturer: Crouse-Hinds
P.O. Box 4999
Syracuse, NY 13221
(Phone) (315) 477-7000

c. Pricing: $282.00 to $5,577.00, depending upon size

d. Operation: Not applicable.

e. Prerequisites: Not applicable.

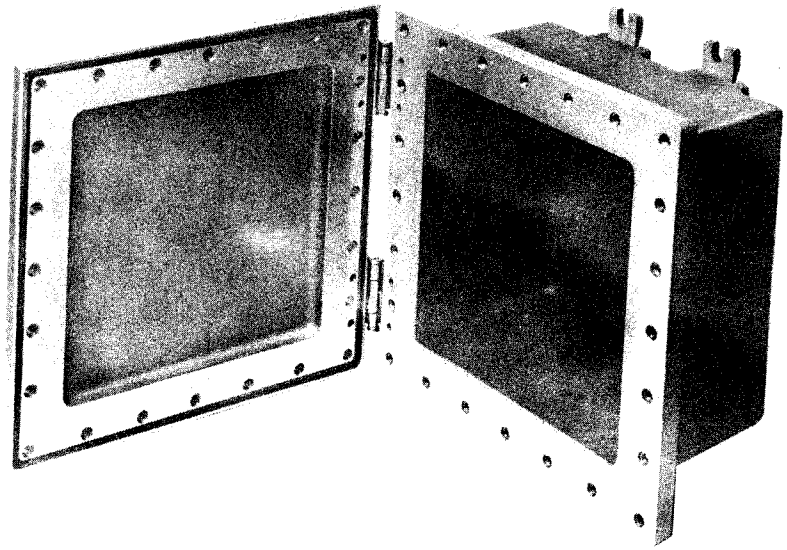

EJB SERIES ENCLOSURE (PHOTO COURTESY OF CROUSE-HINDS)

f. Input specifications: Not applicable.

g. Output specifications: Not applicable.

h. Interfacing: Not applicable.

i. Power requirements and recommendations: Not applicable.

j. Compatible equipment: Not applicable.

k. Software available: Not applicable.

l. Environmental conditions: NEMA 4/7/9 rating.

m. Application information: For hazardous locations. Sizes range from 6 X 4 X 4 in. to 38 X 18 X 10 in.

n. Comments: Other series available with glass windows, different mountings, etc.

IV-20-2. Type and description: **Rack enclosure, free standing, NEMA type 4.** These electronic enclosures are designed to accept EIA RS-310-C standard 19-in. rack mountable equipment. Optional swing-out panels and relay rack angles must be ordered separately.

a. Model: A-72H3124FS, rack 72-inch X 31-inch
A-72SP30F3, full swing-out panel
A-72RP24F5, relay rack angles

b. Manufacturer: Hoffman Engineering
9th and Tyler Street
Anoka, Minnesota 55303
(Phone) (612) 421-2240

c. Pricing: A-72H3124FS, $606.77 each
A-72SP30F3, $119.83 each
A-72RP24F5, $ 31.07 each

d. Operation: Not applicable.

e. Prerequisites: Not applicable.

f. Input specifications: Not applicable.

g. Output specifications: Not applicable.

h. Interfacing: Not applicable.

i. Power requirements and recommendations: Not applicable.

j. Compatible equipment: Instrumentation or data loggers requiring 19-inch rack mountable enclosure.

k. Software available: Not applicable.

l. Environmental conditions: NEMA type 4, watertight and dust tight, indoor and outdoor.

m. Application information: Enclosures are intended for use indoors or outdoors to protect the enclosed equipment against splashing water, seepage of water, falling or hose-directed water, and severe external condensation.

n. Comments: The rack enclosure must be modified by the user to allow access for power and cabling. The relay rack angles specified are intended to be mounted on the swing out panel to allow access to the rear of the equipment. This modification may be done by the factory on request. This company manufactures a wide range of other enclosures suited to the applications of the Army Corp of Engineers.

IV-20-3. **Type and description: Enclosure, electrical.** These enclosures for electrical equipment are available with a broad line of accessories for mounting, connections, etc.

a. Model: AE 10XX, AE11XX, AE12XX, and AE 13XX series.

b. Manufacturer: Rittal Corporation
1900 East Leffel Lane, P.O. Box 1284
Springfield, OH 45505
(Phone) (800) 637-4425

c. Pricing: $62.50 to $599.15, depending upon size and construction

d. Operation: Not applicable.

e. Prerequisites: Not applicable.

f. Input specifications: Not applicable.

g. Output specifications: Not applicable.

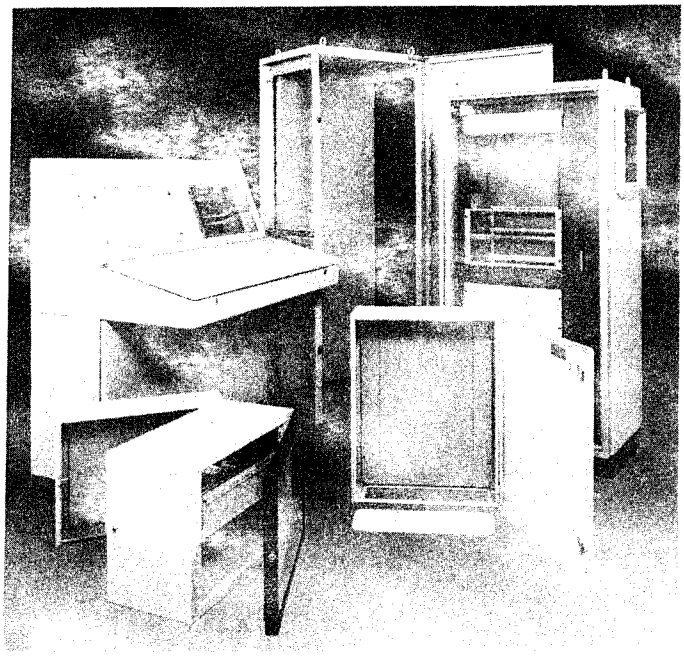

ELECTRICAL EQUIPMENT ENCLOSURES
(PHOTO COURTESY OF RITTAL CORP.)

h. Interfacing: Not applicable.

i. Power requirements and recommendations: Not applicable.

j. Compatible equipment: Not applicable.

k. Software available: Not applicable.

l. Environmental conditions: IP 55/NEMA 4/12/13 rating.

m. Application information: Good choice for exterior use. Sizes range from 11.8 X 7.8 X 6.1 in. to 39.3 X 31.5 X 11.8 in.

n. Comments: None.

IV-20-4. Type and description: **Enclosure, rack.** These enclosures feature see-through doors, swing out 19-in. racks, swing out chassis for ease of maintenance, and a broad line of accessories for connection, mounting, etc.

a. Model: EL 19XX series

b. Manufacturer: Rittal Corporation
1900 East Leffel Lane, P.O. Box 1284
Springfield, OH 45505
(Phone) (800) 637-4425

c. Pricing: $237.05 to $415.07, depending upon size

d. Operation: Not applicable.

e. Prerequisites: Not applicable.

f. Input specifications: Not applicable.

g. Output specifications: Not applicable.

h. Interfacing: Not applicable.

i. Power requirements and recommendations: Not applicable.

j. Compatible equipment: Not applicable.

k. Software available: Not applicable.

l. Environmental conditions: IP 55/NEMA 12/13 rating.

m. Application information: The transparent doors make these enclosures a good choice for applications using equipment with displays or indicators which need protection and visibility. Sizes range from 7.8 X 23.6 X 15.7 in. to 29.9 X 23.6 X 15.7 in.

n. Comments: Not ideal for exterior use.

IV-20-5. Type and description: **Enclosure, junction box.** These electrical enclosures are for smaller devices and connections and come with a broad line of accessories for installation and connection.

a. Model: KL 15XX series

b. Manufacturer: Rittal Corporation
1900 East Leffel Lane, P.O Box 1284
Springfield, OH 45505
(Phone) (800) 637-4425

c. Pricing: $19.30 to $78.47, depending upon size

d. Operation: Not applicable.

e. Prerequisites: Not applicable.

f. Input specifications: Not applicable.

g. Output specifications: Not applicable.

h. Interfacing: Not applicable.

i. Power requirements and recommendations: Not applicable.

j. Compatible equipment: Not applicable.

k. Software available: Not applicable.

l. Environmental conditions: 14 models: IP65/NEMA 4 rating
12 models: IP55/NEMA 4 rating

m. Application information: Sizes range from 5.9 X 5.9 X 4.7 in. to 15.7 X 31.5 X 4.7 in.

n. Comments: Good choice for connection to test points and small devices.

IV-20-6. Type and description: **Enclosure, fiberglass.** Corrosion proof enclosures for harsh environments. These enclosures for electronic and electrical equipment have several accessories for connection, weatherproofing, and mounting.

a. Model: KS14XX series

b. Manufacturer: Rittal Corporation
1900 East Leffel Lane, P.O Box 1284
Springfield, OH 45505
(Phone) (800) 637-4425

c. Pricing: From $67.26 to $488.84, depending on size

d. Operation: Not applicable.

e. Prerequisites: Not applicable.

f. Input specifications: Not applicable.

g. Output specifications: Not applicable.

h. Interfacing: Not applicable.

i. Power requirements and recommendations: Not applicable.

j. Compatible equipment: Not applicable.

k. Software available: Not applicable.

l. Environmental conditions: Dust proof, moisture proof, corrosion proof. Temperature range: -30 to 150 °C. Rated: IP 55/NEMA 4X.

m. Application information: Sizes range from 11.8 X 9.8 X 5.5 in. to 39.3 X 29.5 X 11.8 in.

n. Comments: Limited rear access.

Power Units

IV-21-1. Type and description: **Panel, solar, electric generator.** The M-series of single crystal silicon solar cells provides a highly efficient source of electrical power from direct or diffused sunlight. A family of modules give to the user the options for total power, voltage, and current. The modules are suited for applications requiring power for remote data acquisition and telemetry instrumentation systems.

a. Models: M25
M55
M65
M75
M81
M82
M85
M86
G-100

b. Manufacturer: ARCO Solar, Inc.
P.O. Box 2105
Chatsworth, CA 91313

Represented by:
Atlantic Solar Power, Inc.
6455 Washington Blvd.
Baltimore, MD 21227
(Phone) (301) 796-8094

c. Pricing:

M25	$220.00
M55	$424.00
M65	$336.00
M75	$376.00
M81	$80.00
M82	$115.00
M85	$460.00
M86	$150.00
G-100	$61.20

d. Operation: These solar modules use high efficiency, single crystal silicon cells which are laminated to tempered glass using ethylene vinyl acetate (EVA). Both the cells and glass are anti-reflective coated for improved efficiency. The laminated package is supported by a metal frame. The wiring method provided for each module does not require the use of special

cable assemblies. Models M25, M65, and G-100 are self-regulating modules designed for direct battery connection. They are self-regulating when used to charge batteries of the proper capacity because their electrical characteristics are an excellent match to the charging requirements of a lead acid battery. The model M85 is a portable panel which folds up for easy carrying in a canvas pouch. Models M55 and M75 are well suited for battery charging in warmer climates, where a higher voltage is necessary to fully charge the batteries. A voltage regulator may be required at lower temperatures to keep from overcharging the battery.

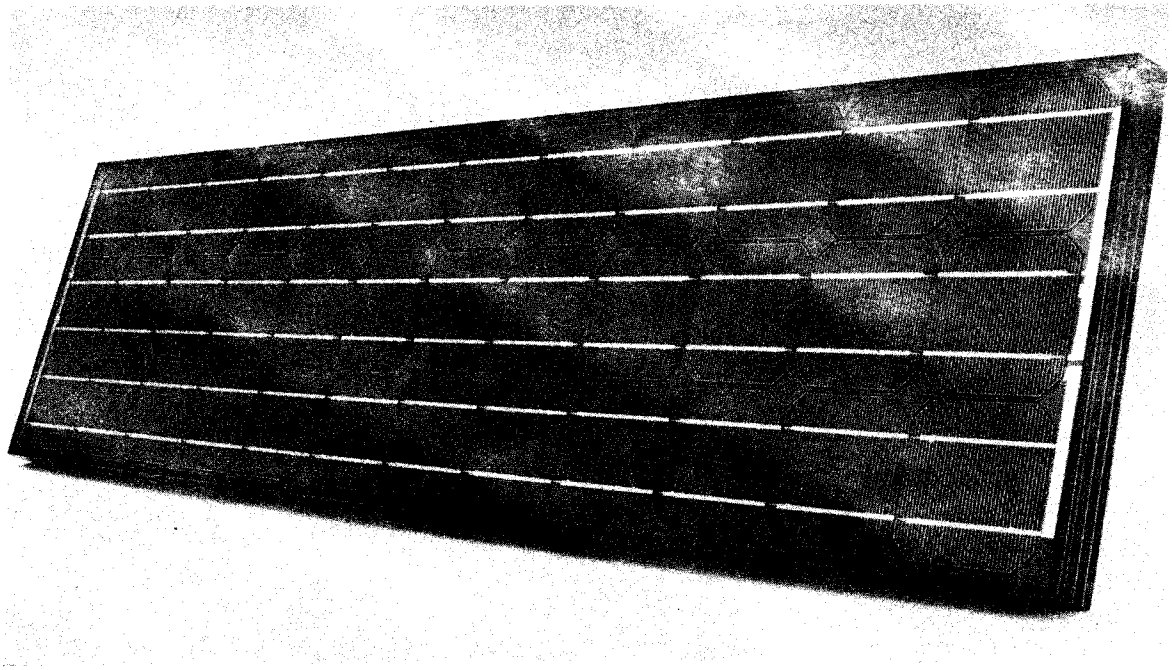

M55 SOLAR ELECTRIC MODULE (PHOTO COURTESY OF ARCO SOLAR, INC.)

e. Prerequisites: Mounting hardware.

f. Input specifications: Produces power at 1/10 of normal noon sunlight.

g. Output specifications:

MODEL NO.	VOLTAGE, CURRENT	MAX. POWER (WATTS)	DIMENSION (in.) and WEIGHT (lb)
M 35	14.6 V, 1.50 amp	22 w	22.4 x 13 x 1.34in. weight not given
M 55	17.4 V, 3.05 amp	53 w	13 x 50.9 x1.34in. 12.8 lb
M 65	14.5 V, 2.90 amp	42 w	13 x 42.6 x 1.34in. 10.8 lb
M 75	16.0 V, 2.94 amp	47 w	13 x 48 x 1.34in. 12.1 lb
M 81	16.0 V, .47 amp	7.5 w	12 x 14 x 1.5in. 3.75 lb
M 82	15.9 V, .46 amp	7.0 w	14.25x11.23x.29in. 1.6 lb
M 85 (12v)	16.8 V, .64 amp	10.8 w	5 x 9.5 x 2.75in. Folded
M 85 (24v)	33.6 V, .32 amp	10.8 w	9 x 33.5 x 0.25in. Deployed (2.75 lbs)
M 86	16.3 V, .60 amp	9.7 w	12 x 14 x 1.5in. 3.75 lb
G-100	14.5 V, .350 amp	5.0 w	13.7x13.1x0.5in. 3.52 lb

h. Interfacing: Not applicable.

i. Power requirements and recommendations: Not applicable.

j. Compatible equipment: DC-powered telemetry and instrumentation systems.

k. Software available: Not applicable.

l. Environmental conditions: Cells are protected from dirt, moisture, and impact by a special low-iron, anti-reflective, tempered glass front. The solar circuit is laminated between the glass front and a durable, multi-layered, polymer back sheet for superior moisture resistance. Operating temperature range is -40 to 90 ^{o}C. Operating humidity range is 0 to 100% RH.

m. Application information: The M series of solar panels may be used to supply DC power to remotely located equipment. The company that represents ARCO solar panels, Atlantic Solar Power, Inc., has many options which aid in the application of these panels. Examples of these options are: cable assemblies, fuseholders, diodes, panel mounting structures, charge controllers, meters, alarms, and batteries.

n. Comments: None.

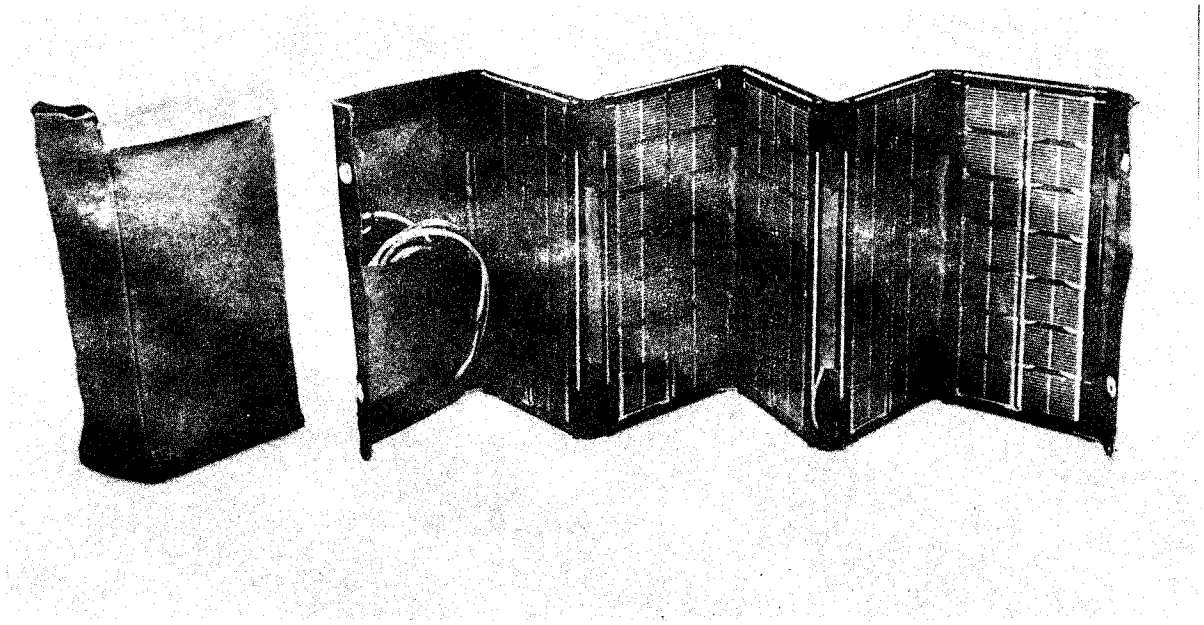

M85 SOLAR ELECTRIC CHARGING UNIT (PHOTO COURTESY OF ARCO)

IV-21-2. Type and description: **Power supply, uninterruptible.** The ISOREG ISOGUARD UPS power supply is an uninterruptible power system specifically designed to protect computer systems from momentary power outages or voltage sags that can shut down a computer. When the voltage is within a specified zone, the ISOGUARD acts as a conditioner to guard against power line noises that may cause errors to occur in a computer. If power fails or sags out of the specified zone, the batteries that are constantly being charged by the raw power, begin to supply the additional power needed to maintain a clean

and adequate voltage supply to the computer. For complete power failure, the ISOGUARD can supply full power for at least 10 min, or more if the user desires.

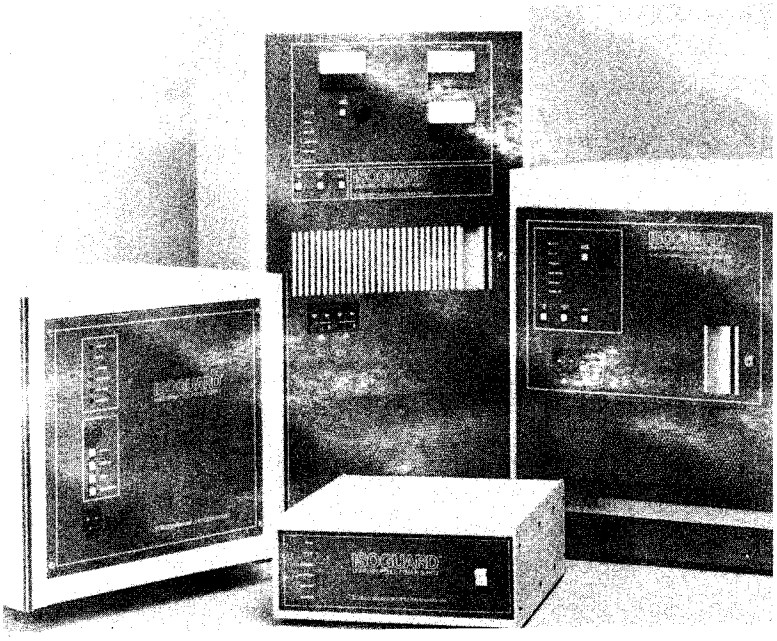

ISOGUARD UPS (PHOTO COURTESY OF ISOREG CORP.)

a. Model: ISOGUARD

b. Manufacturer: ISOREG Corporation
410 Grant Road
Littleton, MA 01460
(Phone) (617) 486-9483

c. Pricing: $1,933.00, 500-VA unit
$3,568.00, 1-kVA unit
$5,390.00, 2-kVA unit
$7,382.00, 3-kVA unit

d. Operation: The ISOREG ISOGUARD is a continuous on-line UPS which means no switching takes place during the transfer from commercial power to battery power. Alternating current from the electric company is rectified into DC. The DC current is fed to a battery, which is continuously charged by this DC, and to a DC/AC inverter. The inverter converts the DC into a clean alternating current signal that is used for computer power. When the input power fails, the DC that maintains the inverter is instantly obtained from

the batteries without any switching or circuit interruption. When power returns, the DC from the rectifier takes over the job and maintains the inverter while also recharging the batteries. The ISOGUARD UPS comes with built-in battery packs that can provide full output power for 10 to 15 min. Since most power outages last only a few seconds, this is sufficient for most applications. For applications where 10 min. is not enough, supplemental battery packs may be connected to significantly lengthen battery operation. ISOGUARD UPSs are equipped with an audible and visible alarm that first alerts the user to the loss of line power and then to the pending loss of battery power two minutes before exhaustion of the battery. Also, a remote alarm interface and a relay for starting a remote generator are offered as options available with the ISOGUARD.

e. Prerequisites: None.

f. Input specifications: Voltage (optional) 220 VAC
120 VAC
208 VAC

g. Output specifications: Power (optional) 500 VA
1 kVA
2 kVA
3 kVA
5 kVA
10 kVA

Voltage (optional) 220 VAC
120 VAC
208 VAC

h. Interfacing: Not applicable.

i. Power requirements and recommendations: Same as input specifications.

j. Compatible equipment: Not applicable.

k. Software available: Not applicable.

l. Environmental conditions:
Temperature range: -20 to 40 ^{o}C.

m. Application information: The ISOGUARD UPS is used to supply steady AC power to computer systems that are highly sensitive to power line fluctuations and to supply emergency power for a short time if primary power fails.

n. Comments: None.

IV-21-3. Type and description: Conditioner, power. The ISOREG computer power conditioner combines the functions of an isolation transformer and a voltage stabilizer to supply clean, noise-free power to a computer system. Raw utility power is too subject to electrical noise, voltage spikes, voltage sags, voltage surges, and brownouts. These anomalies cause severe and frequent computer malfunctions and data errors. The ISOREG is designed to shield the computer power from these occurences and provide the computer with a clean, nonfluctuating voltage.

a. Model: ISOREG

b. Manufacturer: ISOREG Corporation
410 Great Road
Littleton, MA 01460
(Phone) (617) 486-9483

c. Pricing:

125 VA:	$268.00
250 VA:	$321.00
375 VA:	$409.00
750 VA:	$565.00
1250 VA:	$729.00
2500 VA:	$1224.00
5000 VA:	$2041.00
7500 VA:	$2624.00
10,000 VA:	$3556.00

d. Operation: The ISOREG computer power conditioner uses an isolation transformer to filter out spikes and noise on the raw power line. It can filter out a spike that briefly reaches 1000 V; the voltage stabilizer protects the computer from longer lasting fluctuations of the input power such as sags, surges, or brownouts. The ISOREG stabilizer protects the computer from a sustained 40% drop in voltage to a sustained 100% surge. Also, the ISOREG supplies clean power even when a power outage of one cycle occurs. Such brief outages are frequent and account for the majority of computer interference.

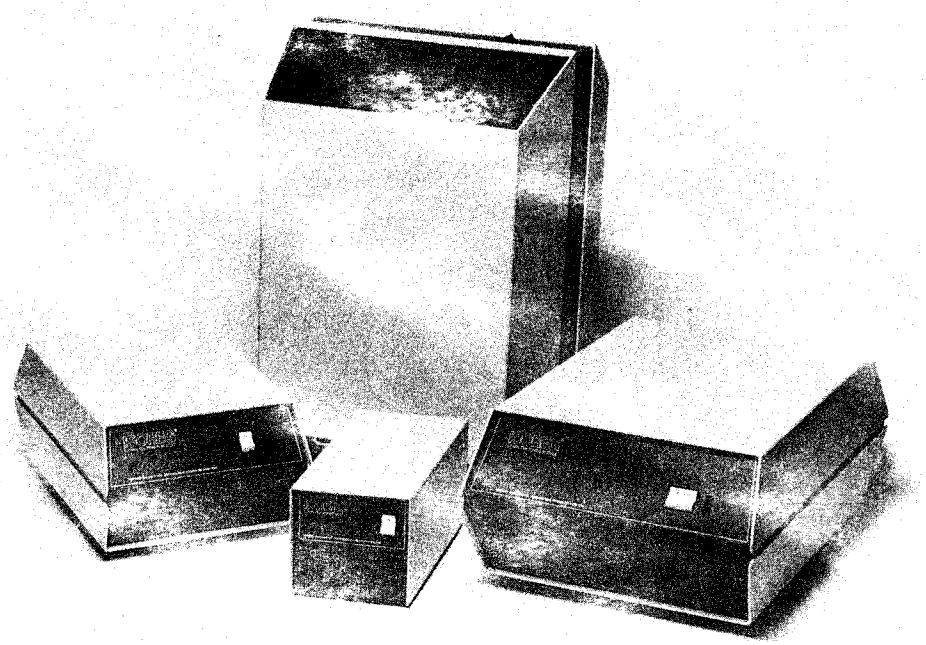

POWER CONDITIONER (PHOTO COURTESY OF ISOREG CORP.)

e. Prerequisites: None

f. Input specifications:
Voltage options include: 120, 220, 480 VAC

g. Output specifications:
Voltage options include: 120, 220, 480 VAC
Power options include: 125 VA, 250 VA, 375 VA, 750 VA, 1,250 VA, 2,500 VA, 5,000 VA, 7,500 VA, 10,000 VA

h. Interfacing: Not applicable.

i. Power requirements and recommendations:
Voltage options include: 120, 220, 480 VAC

j. Compatible equipment: Not applicable.

k. Software available: Not applicable.

l. Environmental conditions:
Operating temperature: -20 to 40 ^{o}C

m. Application information: The ISOREG computer power conditioner is designed to protect computers against noise spikes, sags, surges, brownouts, and momentary power outages (half cycle dropouts).

n. Comments: None.

IV-21-4. **Type and description: Generator, thermoelectric.** The RPG series of ovonic thermoelectric generators is a rugged source of DC power; the series is designed for use in remote and hazardous locations. Various models are available with power ratings from 1 watt to 22 watts.

a. Model: RPG-1 series and RPG-2 series

b. Manufacturer: OVONIC Thermo Electric Co.
1864 Northwood
Troy, MI 48084
(Phone) (313) 362-3140

c. Pricing: All models approximately $83.00 / w. Voltage limiter A5A2E010 is $75.00.

d. Operation: The thermoelectric generators use a flameless catalytic bed as a heat source. The heat is converted to electricity by an ovonic process. The generators will use either natural gas or propane/butane gas as a fuel. Standard electronic ignition provides hazardless start-up with an optional restart capability.

The voltage output will be determined by the load resistance. For the application of charging batteries, a voltage limiter A5A2E010 is required to limit the charging voltage.

The generator is maintenance free, and can be left unattended for months at a time as long as sufficient fuel is supplied.

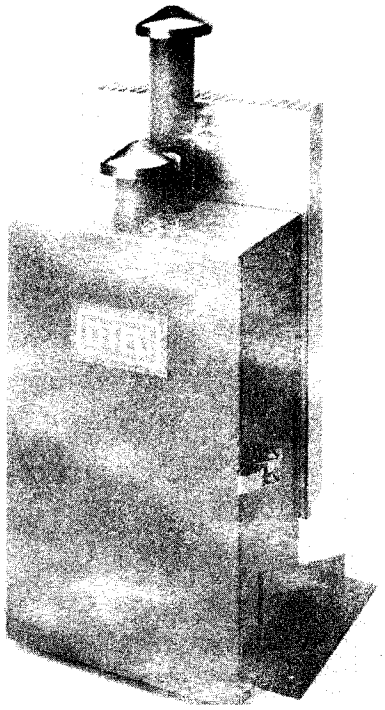

RPG-1 SERIES (PHOTO COURTESY OF OVONIC THERMOELECTRIC CO.)

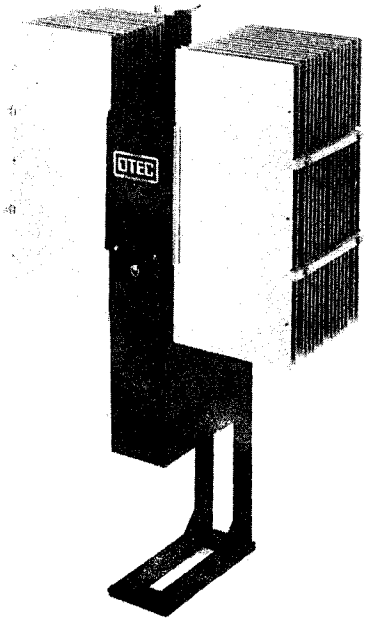

RPG-2 SERIES (PHOTO COURTESY OF OVONIC THERMOELECTRIC CO.)

e. Prerequisites: Installment in a well ventilated area.

f. Input specifications: Refer to output specifications (fuel consumption).

g. Output specifications:

MODEL	ELECTRICAL SPECIFICATIONS Nominal Output	Matched Load (V)	(A)	Output (W)
RPG-101-12	1.2W@12V	12	.10	1.2
RPG-108-6	8W@6V	7	1.35	9.5
RPG-106-12	6W@12V	8	1.35	10.8
RPG-110-12	10W@12V	9	1.35	12.2
RPG-212-12	12W@12V	12	1.13	13.5
RPG-218-12	18W@12V	14	1.40	19.6
RPG-220-12	20W@12V	17	1.40	23.8
RPG-214-24	14W@24V	24	0.58	14.0
RPG-222-24	22W@24V	24	0.92	22.0

MODEL	FUEL CONSUMPTION Natural Gas (ft^3/hr)	Propane/Butane (ft^3/hr)	(lb/hr)
RPG-101-12	1.0	.43	.05
RPG-108-6	2.0	.85	.10
RPG-106-12	2.5	1.10	.13
RPG-110-12	3.5	1.50	.18
RPG-212-12	3.5	1.3	.16
RPG-218-12	5.0	3.1	.27
RPG-220-12	5.2	3.2	.29
RPG-214-24	5.2	3.2	.29
RPG-222-24	6.5	4.0	.36

MODEL	DIMENSIONS AND WEIGHT H (in)	W (in)	D (in)	Weight (lbs)
RPG-101-12	24	10	8	30
RPG-108-6	24	10	12	40
RPG-106-12	24	10	12	40
RPG-110-12	24	10	12	40
RPG-212-12	28	21	9	60
RPG-218-12	28	21	9	60
RPG-220-12	28	21	9	60
RPG-214-24	28	21	9	60
RPG-222-24	28	21	9	60

h. Interfacing: Not applicable.

i. Power requirements and recommendations: Not applicable.

j. Compatible equipment: DC-powered telemetry and instrumentation systems.

k. Software available: Not applicable.

l. Environmental conditions: Designed to operate in harsh environments, ranging from arid desert to the extreme

cold of the Arctic. There are no wind, snow, or rain limitations. It can be installed outdoors without additional protection.

m. Application information: This thermoelectric generator can be used to supply DC power to remote data acquisition and telemetry systems. One advantage of this generator over solar powered generators is the constant source of power that does not vary with the sun. The batteries used with the thermoelectric generator can be much smaller than those used with a solar generator, due to the fact that they are being charged constantly rather than only when the sun's radiation is at a certain level.

n. Comments: One of these generators has been installed at a remote dam in an Oregon city. It is in use with more than satisfactory results.

IV-21-5. Type and description: **Panel, solar, photovoltaic module.** The SX-series of photovoltaic solar panel modules consists of semicrystalline silicon solar cells connected in various configurations dependent upon the voltage and current requirements. The modules are suited for applications requiring power for remote telemetry instrumentation systems.

a. Model: SX-5
SX-10
SX-20

b. Manufacturer: Solarex Corporation
1335 Piccard Drive
Rockville, Maryland 20850
(Phone) (301) 948-0202

c. Pricing: $128.00, SX-5
$188.00, SX-10
$285.00, SX-20

d. Operation: These solar panels may be connected to operate in either of two modes. The first mode delivers power to systems using 6 V rechargeable batteries. The second mode delivers power to systems using 12 V rechargeable batteries. The mode is selected by positioning jumper leads on the appropriate terminals in the module junction box.

The cell strings are laminated between sheets of ethylene vinyl acetate and a sheet of 1/8-in tempered low-iron glass. The glass is self-cleaning in most climates, retains its excellent transmissivity indefinitely, and is extremely resistant to mechanical stress, including impact of hail up to 1 in. diameter at terminal velocity (52 mph). The temperature coefficient of expansion is well-matched to the cells; this matching ensures excellent service even in climates with severe daily temperature ranges.

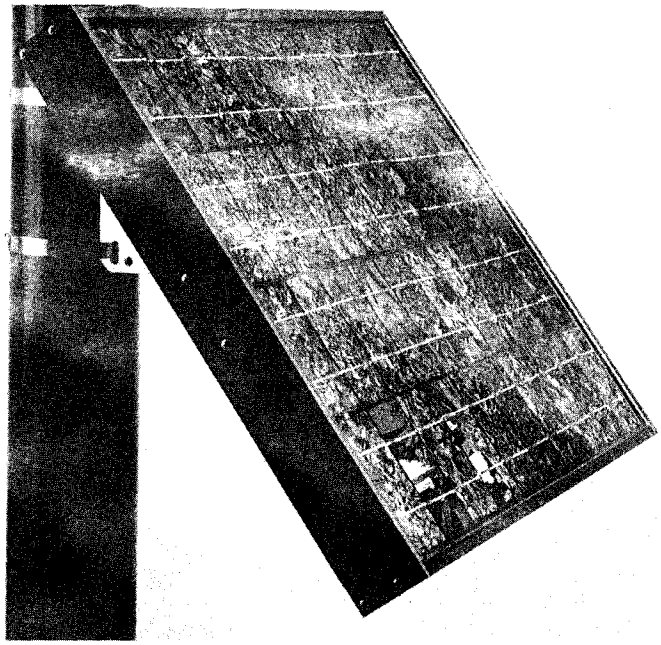

SX SERIES SOLAR PANEL (PHOTO COURTESY OF SOLAREX CORP.)

e. Prerequisites: Mounting hardware and wiring.

f. Input specifications: Not applicable.

g. Output specifications:

Model SX-5:

	12-volt	6-volt
Peak power	5 W	5 W
Peak voltage	17 V	8.5 V
Peak current	294 mA	588 mA
Temp.coefficient of power	-0.4%/°C	-0.4%/°C

Model SX-10:

	12-volt	6-volt
Peak power	11.5 W	11.5 W
Peak voltage	18 V	9 V
Peak current	0.64 A	1.28 A
Temp. coefficient of power	-0.4%/°C	-0.4%/°C

Model SX-20:

	12-volt	6-volt
Peak power	23 W	23 W
Peak voltage	18 V	9 V
Peak current	1.28 A	2.56 A
Temp. coefficient of power	-0.4%/°C	-0.4%/°C

h. Interfacing: Not applicable.

i. Power requirements and recommendations: Not applicable.

j. Compatible equipment: DC-powered telemetry and instrumentation systems.

k. Software available: Not applicable.

l. Environmental conditions:
Temperature: -40 to 85 °C
Humidity: up to 85% RH

m. Application information: The SX series of solar panels may be used to supply DC power to remotely located equipment.

n. Comments: None.

IV-21-6. **Type and description: Conditioner, power.** The Topaz LINE 1 power conditioners are designed to provide computer systems with a clean, regulated power supply environments needed to operate correctly. These power conditioners provide protection against electrical noise and also against consistently high or low line voltage. The LINE 1 also provides a feature known as "peak current" power that aids computers which use nonlinear power supplies that do not draw current evenly throughout the full cycle of the AC power.

a. Model: LINE 1

b. Manufacturer: TOPAZ
9150 Topaz Way
San Diego, CA 92123-1164
(Phone) (619) 279-0831

c. Pricing: $335.00, 250-VA unit
$470.00, 500-VA unit
$565.00, 750-VA unit
$710.00, 1-kVA unit
$850.00, 1-kVA unit
$1,085.00, 2-kVA unit

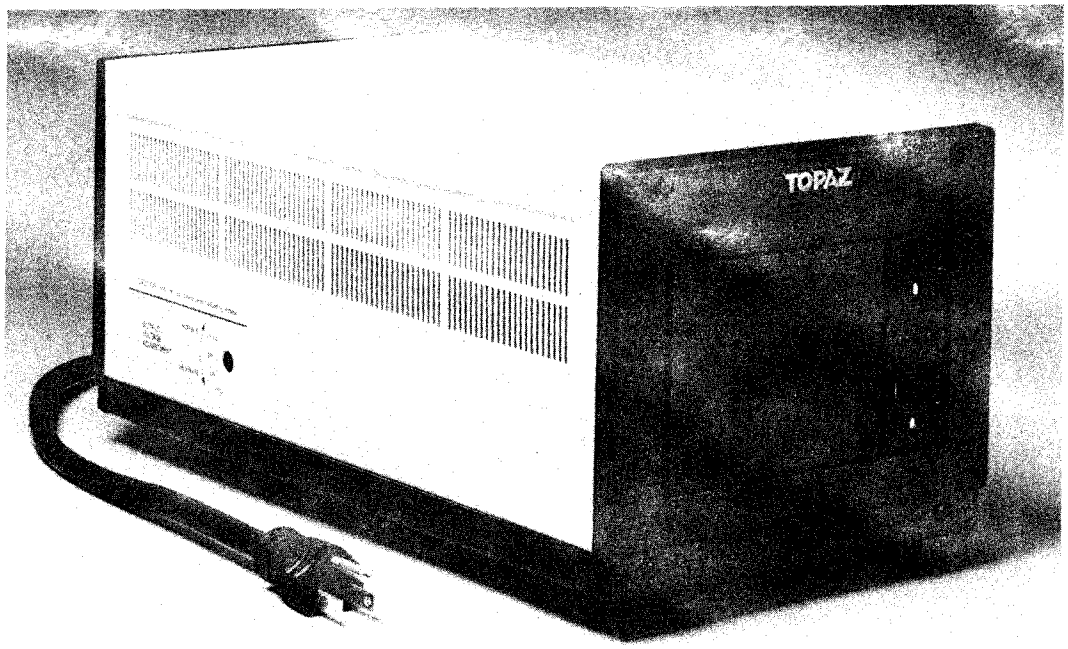

POWER CONDITIONER (PHOTO COURTESY OF TOPAZ)

d. Operation: Spurious electrical noise disturbances on the AC line originate from such sources as utility network switching, load switching and lightning. Computers in this type of noisy environment may suffer numerous problems such as computing errors, printing errors, and improper data transfer. The LINE 1 power conditioners combine a dual T-section line filter, an electrostatically shielded transformer, and a two-stage surge suppression network that provides adequate protection against noise spikes and surges of up to 6,000 volts. In some areas, the line voltage is consistently high or consistently low. The LINE 1 enables the user to boost the input voltage by either 5

or 7.5% or to lower it by 5%. These adjustments are made simply by turning a switch. Many of todays computer systems employ nonlinear switched mode power supplies. These power supplies can distort the waveform of the computer power. Instead of drawing current evenly, they draw sudden surges of current that tend to cause a "flat topping" effect on the sinusoidal waveform of the power. The LINE 1 power conditioners provide a feature known as peak current power that allows the voltage waveform of the power to remain undisturbed by these current surges.

e. Prerequisites: None.

f. Input specifications: Voltage: 120 VAC

g. Output specifications: Voltage: 120 VAC
Power: (options) 250 VA, 500 VA, 750 VA, 1 kVA, 2 kVA

h. Interfacing: Not applicable.

i. Power requirements and recommendations: 120 VAC at 60 Hz.

j. Compatible equipment: Not applicable.

k. Software available: Not applicable.

l. Environmental conditions:
Operating temperature: 0 to 50 °C

m. Application information: The Topaz LINE 1 power conditioners are designed to protect against noise spikes, sags, surges, and brownouts.

n. Comments: None.

IV-21-7. Type and description: Power supply, uninterruptible. The PowerMaker Micro uninterruptible power supply (UPS) is a system specifically designed to protect mini- or microcomputer systems from split-second power outage or a sudden voltage dip that may shut down a computer system for hours. When the commercial power is within computer tolerance, the PowerMaker UPS acts as a filter to protect equipment against power line noise, one of the major causes of computer errors. If the

commercial power fails or dips below tolerance, the UPS begins supplying steady, noise-free power to the computer within a half cycle of the line voltage. When commercial power returns to normal, the unit automatically switches the computer back to the power line.

a. Model: PowerMaker Micro

b. Manufacturer: Topaz
9192 Topaz Way
San Diego, CA 92123-1165
(Phone) (619) 279-0831

c. Pricing: $1085.00 for the highest powered unit

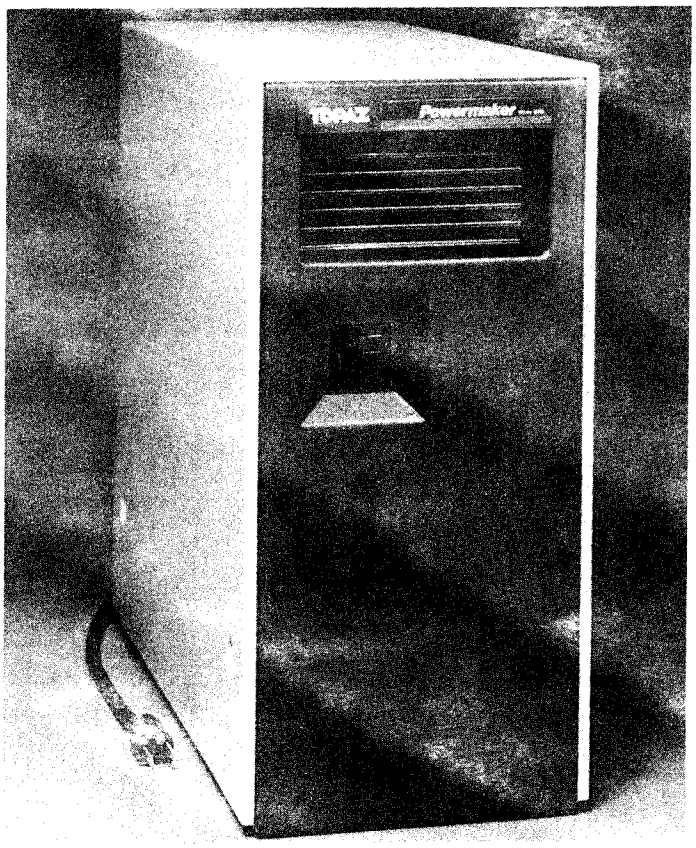

UPS (PHOTO COURTESY OF TOPAZ)

d. Operation: Since most power fluctuations are very brief (generally less than a second), the switching between the PowerMaker Micro UPS power and commercial power generally goes unnoticed. But, during prolonged brownouts or outages, the unit emits a beeping tone to

alert the user that it is supplying power to the system. The PowerMaker UPS may be equipped with a status monitor which sends a logic signal to the protected computer system when primary power fails. This signal may be used to initiate a system shutdown or to alert the user by printing a warning message on the computer viewing screen. The PowerMaker UPS uses maintenance-free lead acid batteries. The unit may be fitted with enough battery capability to sustain full load power for either 9, 12, or 35 min. A battery sensor prevents the batteries from discharging beyond their capacity to be recharged. The unit also features overload and short circuit protection

e. Prerequisites: None.

f. Input specifications:

Voltage options:	120 VAC, 60 Hz
	220 VAC, 50 Hz
	240 VAC, 50 Hz

g. Output specifications:

Power options:	400 VA
	800 VA
	1000 VA
Voltage options:	120 VAC, 60 Hz
	220 VAC, 50 Hz
	240 VAC, 50 Hz

h. Interfacing: Not applicable.

i. Power requirements and recommendations:

Voltage options:	120 VAC at 60 Hz
	220 VAC at 50 Hz
	240 VAC at 50 Hz

j. Compatible equipment: Not applicable.

k. Software available: Not applicable.

l. Environmental conditions:

Operating temp: 0 to 40 °C
Operating humidity: 0 to 95% RH. noncondensing

m. Application information: The PowerMaker Micro UPS is used to supply steady power to mini- and microcomputer systems that are highly sensitive to power line fluctuations and to supply emergency power for a short time, if primary power fails.

n. Comments: None.

Calibrators

IV-22-1. Type and description: **Calibrators for RTDs, thermocouples, ohms, milliamps and millivolts.** These calibrators may be used to measure and simulate the previously listed parameters. The units are hand-held and may be used on the bench or in the field. Independent, simultaneous zero and span functions eliminate repetitive readjustments of settings on instruments being calibrated.

a. Model: 474 - RTDs, ohms and milliamps
477 - thermocouples, millivolts and milliamps

b. Manufacturer: Doric Scientific Division
3883 Ruffing Rd
San Diego, CA 92123
(Phone) (619) 565-4415

c. Pricing: $895.00, model 474
$795.00, model 477

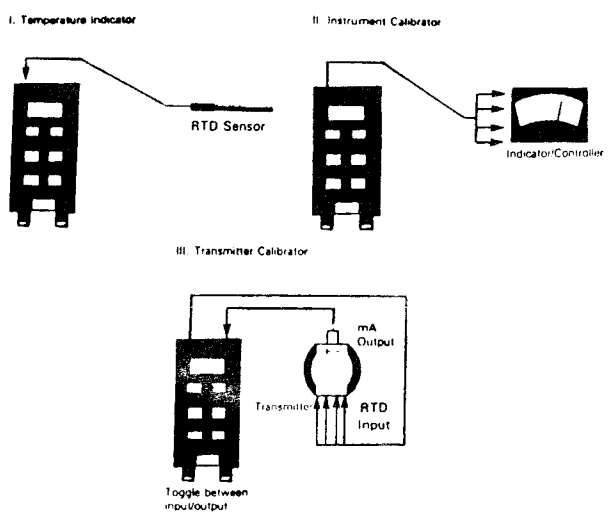

FIGURE 48. MODEL 474 CONFIGURATIONS

d. Operation: The Doric models 474 and 477 are hand-held calibrators designed for use in the field. The model 474 is used to calibrate and simulate three RTD types (PT.385, PT.392, and CU1052) as well as ohms and milliamps. The model 477 is used to calibrate and simulate three types of thermocouples (J, K, and T) as well as millivolts and milliamps.

The model 474 has three operating configurations: it can read a sensor, simulate a sensor for calibrating instrumentation, and calibrate a transmitter. Calibrating a transmitter is performed by simultaneously measuring the output current of the transmitter, while simulating the RTD input to the transmitter. Figure 49 shows these configurations. Readings are directly in °C or °F with selectable resolution of 1.0° or 0.1°. A liquid crystal display (LCD) provides the readouts and includes a minus sign, low battery, and over/under range indications.

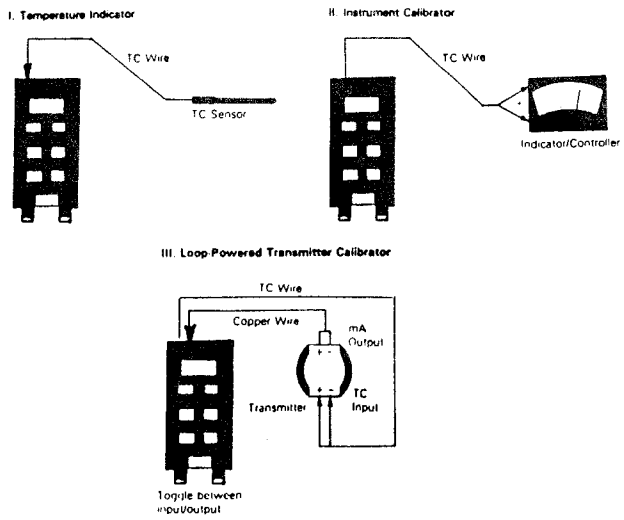

FIGURE 49. MODEL 477 CONFIGURATIONS

The model 477 has the same operating configurations as the model 474. The configurations for the 477 are shown in Figure 49. Readings are in °C or °F (no conversion required by operator) with selectable resolutions of 1.0° or 0.1°. A single LCD is used for all input and output readings. Also provided on the LCD are a minus sign, open sensor, and

low battery indicators. The standard thermocouple connector provides cold junction compensation.

e. Prerequisites: None.

f. Input specifications:

Model 474: 100-ohm platinum RTDs (.385 and .392)
10-ohm copper RTD

Ranges: 2 to 399 ohms (0.1-ohm resolution)
2 to 1000 ohms (1-ohm resolution)
0 to 39mA (0.01-mA resolution)
0 to 399mV (0.01-mV resolution)

Model 477: Thermocouple types J, K, and T
Ranges - -37 to +111 mV (100-uV resolution)
-9 to +27 mV (10-uV resolution)
0 to 27-mA (10-uA resolution)

g. Output specifications:

Model 474: Current 172 uA for temperature ranges
55 uA for 0.1-ohm range
5.5 uA for 1.0-ohm range

Model 477: Current 150 mA (maximum)

h. Interfacing: Not applicable.

i. Power requirements and recommendations: Both modules operate off 9-V transistor batteries.

j. Compatible equipment: Not applicable.

k. Software available: Not applicable.

l. Environmental conditions: Environmental values are applicable to both models.

Temperature: -20 to 55 °C (operating)
-30 to 60 °C (storage)

Humidity: 0 to 90% RH. (noncondensing)

m. Application information: These units may be used for either in-field or on-bench calibration of instrumentation.

n. Comments: Both units are hand-held and constructed of strong acrylic. They are extremely durable making them well suited for portable field use.

IV-22-2. Type and description: Standard, calibration, DC voltage and current. This model has three voltage ranges and two current ranges and may be used to calibrate digital voltmeters, A/D converters, and logging systems, as well as simulating thermocouples, strain gages, and other transducers. Front panel controls are used to select range and polarity, local or remote control. Remote control is accomplished via an optional IEEE-488 interface.

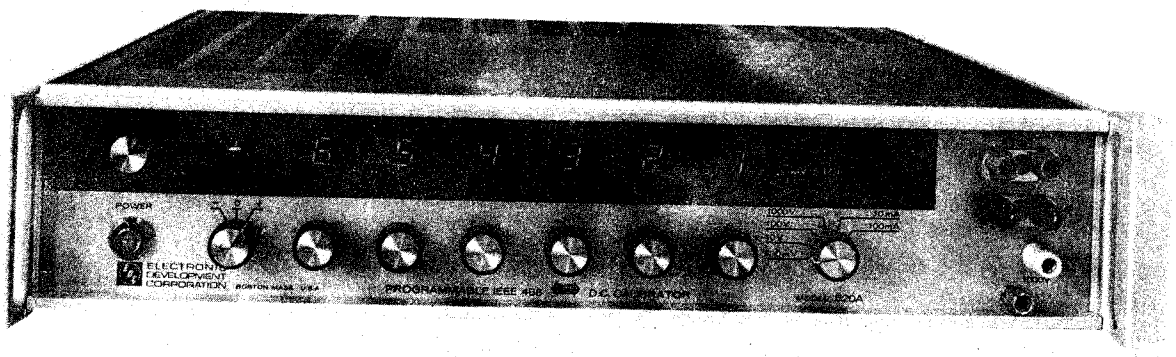

520A CALIBRATOR (PHOTO COURTESY OF ELECTRONIC DEVELOPMENT CORP)

a. Model: 520A

b. Manufacturer: Electronic Development Corp.
11 Hamlin St.
Boston, MA 02127
(Phone) (617) 268-9696

c. Pricing: $2650.00

d. Operation: The EDC 520A has three voltage and two current ranges. Ranges are selected by a front panel switch. The desired output voltage or current is dialed-in on the front panel by six rotary switches. The output is available on front panel terminals and a rear panel connector. This unit also provides a polarity switch for selecting polarity and zero reference.

Remote operation is available via an optional IEEE-488 bus. The front panel LOCAL/REMOTE switch is placed in REMOTE. Commands are passed to the 520A in an eight-byte format. The command bytes are broken down as follows: one for polarity, six for voltage or current value represented in binary coded decimal, and one for range.

Transducers may be simulated by setting the appropriate output through the front panel switches and connecting the 520A outputs to the inputs of the instrument being calibrated. Output levels may be set remotely as described in preceding paragraphs.

e. Prerequisites: The 520A may operate as a stand-alone calibration unit, or it may operate as part of an IEEE-488 system controlled by an IEEE-488 compatible computer.

f. Input specifications: Not applicable.

g. Output specifications:

Voltage:	Ranges	100 mV, 10 V, and 100 V
	Resolution	100 nV, 10 uV, and 100 uV
Current:	Ranges	10 mA and 100 mA
	Resolution	10 nA and 100 nA

h. Interfacing: IEEE-488 (optional).

i. Power requirements and recommendations: 115 or 220 VAC at 50 or 60 Hz.

j. Compatible equipment: IEEE-488 compatible computers and equipment.

k. Software available: Not applicable.

l. Environmental conditions:

Temperature:	10 to 50 ^{o}C (operating)
Humidity:	0 to 90% RH. noncondensing

m. Application information: The 520A may be used to calibrate digital voltmeters, A/D converters, and logging system, and simulate thermocouples, strain gages, and other transducers.

n. Comments: None

IV-22-3. **Type and description: Generator, pulse.** The HP 811A pulse generator combines pulse/function generation in a single unit. This unit is capable of outputting sine, triangle, ramp, square, and pulse waveforms. Frequency of the output waveform is selectable between 1 Hz to 20 MHz.

a. Model: HP 8111A

b. Manufacturer: Hewlett-Packard
P.O. Box 10301
Palo Alto, CA 94303-0890
Phone: (415) 857-8000

c. Pricing: $1965.00
$370.00, for burst option

d. Operation: The HP 8111A is a function generator capable of outputting various waveforms at frequencies ranging from 1 Hz to 20 MHz. It may be used for calibration and testing of frequency inputs on various pieces of equipment.

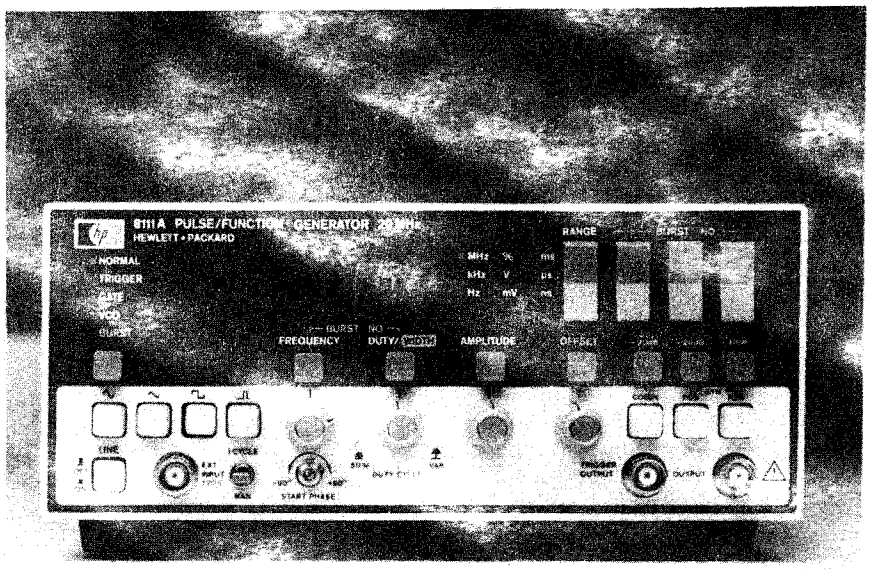

MODEL 8111A (PHOTO COURTESY OF HEWLETT-PACKARD)

The type of output waveform is selected using four front panel push-button switches. Possible output waveforms include sine, triangle, ramp, and square. The desired output amplitude and frequency are selected using front panel switches. The output connector is located on the front panel as well.

Also, waveforms may be output as a pulse with pulse width ranging from 25 nsec to 100 msec. An optional burst function allows the generation of a precise number of waveforms.

e. Prerequisites: Cables to connect the output of the function generator to the input of equipment being calibrated.

f. Input specifications: Not applicable.

g. Output specifications:

Frequency range:	1.00 Hz to 20.0 MHz
Pulse width:	25.0 nsec to 100 msec
Amplitude range:	1.60 mV to 16.00 V (peak-to-peak)
Waveforms:	sine, triangle, ramp, square, pulse, and haverfunction

h. Interfacing: Not applicable.

i. Power requirements and recommendations: 100, 120, 220, or 240 VAC, 48 to 440 Hz.

j. Compatible equipment: Not applicable.

k. Software available: Not applicable.

l. Environmental conditions:

Temperature:	-40 to 75 °C (storage)
	0 to 55 °C (operating)
Humidity:	0 to 95% RH.

m. Application information: The HP 8111A may be used to calibrate and test frequency inputs of various equipment.

n. Comments: None.

APPENDIX A

ENCLOSURE NEMA RATINGS

NEMA TYPE 1 - GENERAL PURPOSE INDOOR enclosures are intended for use indoors, primarily to prevent accidental contact of personnel with the enclosed equipment, in areas where unusual service conditions do not exist.

NEMA TYPE 2 - DRIPPROOF INDOOR enclosures are intended for use indoors to protect the enclosed equipment against falling noncorrosive liquids and falling dirt.

NEMA TYPE 3 - DUSTTIGHT, RAINTIGHT AND SLEET-RESISTANT (ICE-RESISTANT) OUTDOOR enclosures are intended for use outdoors to protect the enclosed equipment against wind-blown dust and water.

NEMA TYPE 3R - RAINPROOF AND SLEET-RESISTANT (ICE-RESISTANT) OUTDOOR enclosures are intended for use outdoors to protect the enclosed equipment against rain and are constructed so the accumulation and melting of sleet (ice) does not damage the enclosure and its external mechanisms.

NEMA TYPE 4 - WATERTIGHT AND DUSTTIGHT INDOOR AND OUTDOOR enclosures are intended for use indoors or outdoors to protect the enclosed equipment against splashing water, seepage of water, falling or hose-directed water, and severe external condensation.

NEMA TYPE 4X - WATERTIGHT, DUSTTIGHT AND CORROSION-RESISTANT INDOOR AND OUTDOOR enclosures have the same provisions as Type 4 enclosures and, in addition, are corrosion-resistant.

NEMA TYPE 9, CLASS II, DIVISION 1 GROUP E, FOR OR G - INDOOR HAZARDOUS LOCATIONS AIRBREAK EQUIPMENT enclosures are intended for use indoors in the atmospheres and locations defined as Class II, Division 1, and Group E, F, or G in the "National Electrical Code" to prevent the entrance of explosive amounts of hazardous dust.

NEMA TYPE 12 - INDUSTRIAL USE DUSTTIGHT AND DRIPTIGHT INDOOR enclosures are intended for use indoors to protect the enclosed equipment against fibers, flyings, lint, dust and dirt, and light splashing, seepage, dripping and external condensation of noncorrosive liquids.

NEMA TYPE 13 - OILTIGHT AND DUSTTIGHT INDOOR enclosures are intended for use indoors primarily to house pilot devices such as limit switches, foot switches, pushbuttons, selector switches, pilot lights, etc., and to protect these devices against lint and dust, seepage, external condensation, and spraying of water, oil or coolant.

APPENDIX B

AUTOMATED MEASUREMENT METHODS FOR CARLSON METERS

PURPOSE

This appendix illustrates several methods to make ratio and temperature measurements with Carlson meters using automated data acquisition systems. The methods shown do not preclude computation of calibration factors at the time of installation as described in EM1110-2-4300, paragraphs 2-13 through 2-17. Lead wire resistance computations may not be required if the data acquisition input automatically cancels out the lead resistance.

FOUR-WIRE CARLSON METERS

The four-wire Carlson meters and attached four-conductor cable permit the measuring systems to make automatic subtraction of cable resistance for cable lengths up to 600 feet if all four conductors in the cable are the same wire gage and matched in length.

a. Voltage measurements - Carlson meter measurements may be made by applying a constant current to the Carlson meter and measuring the voltage drop across each coil in the Carlson meter. The current source must be low (i.e., 1 mA) to avoid self-heating of the coils. The data acquisition system must have a high input impedance, capability to measure differential voltages, and resolve 1 part in 5000 (13-bit A/D converter or 5-digit DVM). The following is a typical example of a voltage measurement method.

Measurement Sequence:

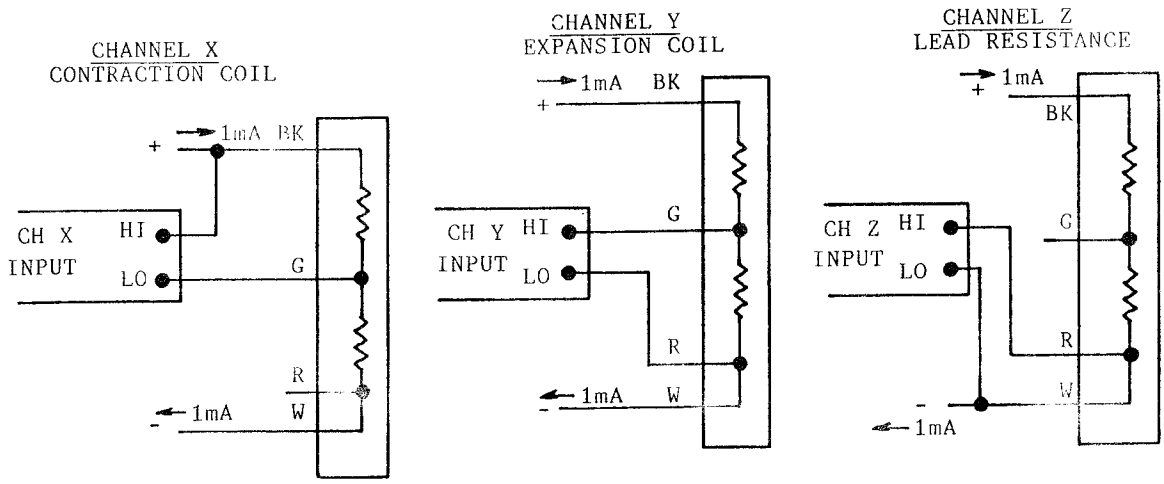

Wiring Diagram:

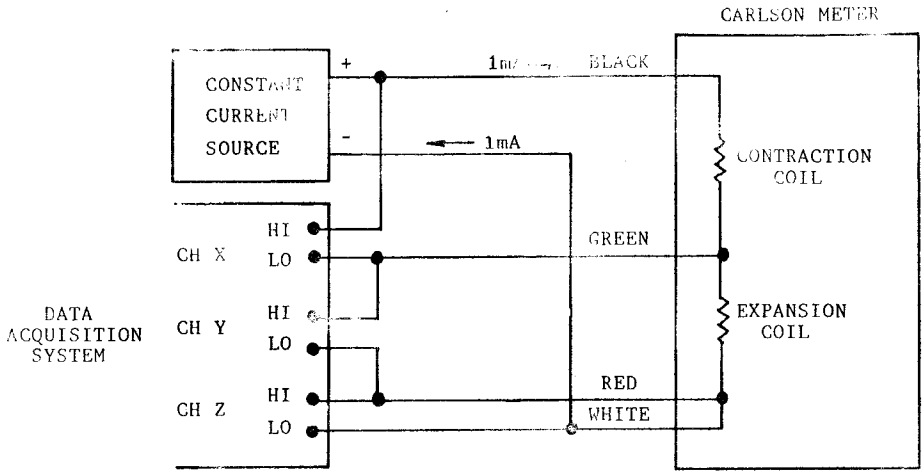

Equations: Ratio = $V_{chY}/V_{chX}-V_{chZ}$

Temperature = $((V_{chX}-V_{chZ}) + V_{chY})/I$

b. <u>Four-wire resistance measurement</u> - Carlson meter measurements may be taken by a data acquisition system capable of measuring resistance to 0.01-ohm resolution on a 100-ohm or greater range. Three channels are required.

Measurement Sequence:

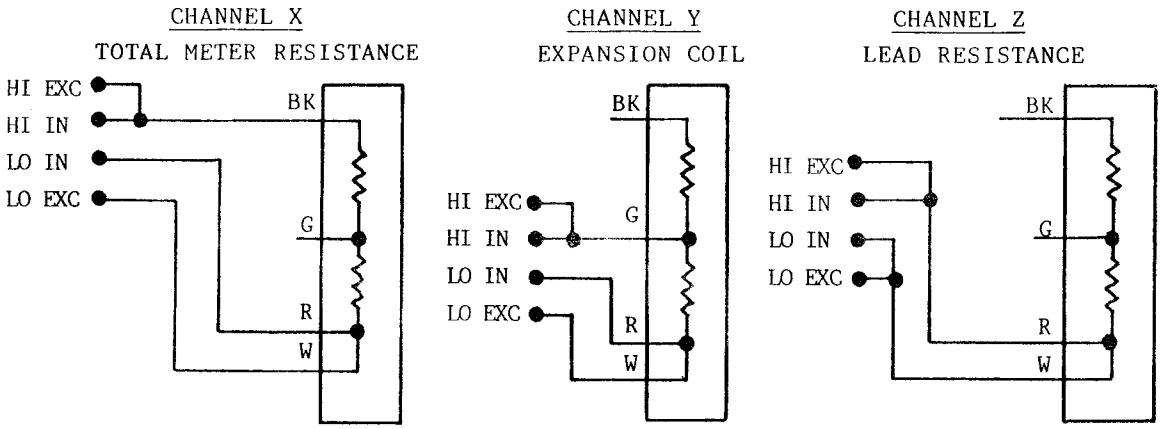

Wiring Diagram:

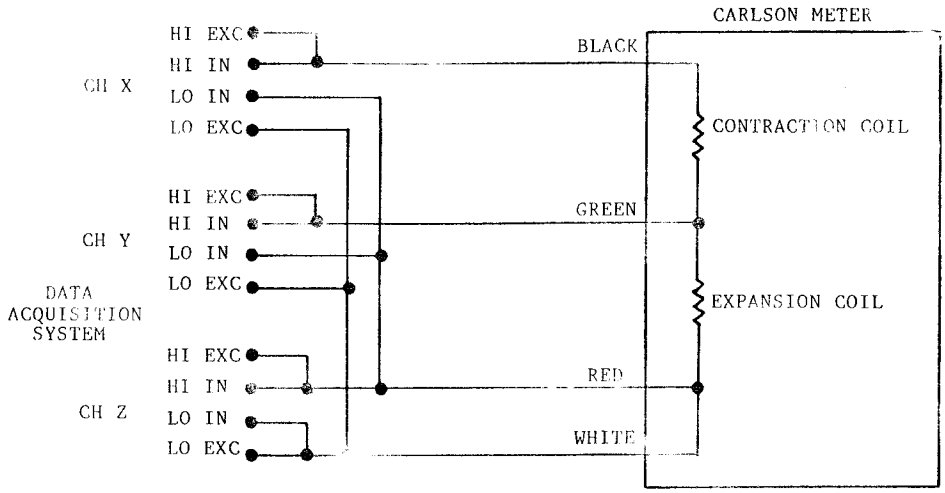

Equations: Ratio = $R_{chY} - .5R_{chZ}/R_{chX} - R_{chY}$

Temperature = $R_{chX} - .5R_{chZ}$

c. <u>Three-wire resistance measurement</u> - Carlson meter measurements may be taken by a three-wire resistance measuring data acquisition system if the input module for the data acquisition system contains a three-wire compensation amplifier. The compensation amplifier senses the lead wire voltage drop between LO input and LO excitation and electrically sets the LO input to one lead wire voltage drop below common. The John Fluke Manufacturing, Inc., model 2280 data logger with option 2280B-163, resistance scanner, is a typical example of this type of data acquisition system. The measurement requirements are 0.01 ohm. Two resistance input channels are required for each Carlson meter.

Measurement Sequence:

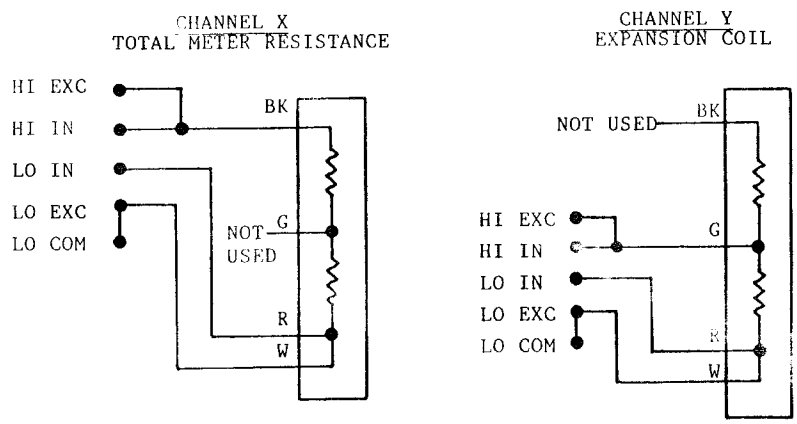

Wiring Diagram:

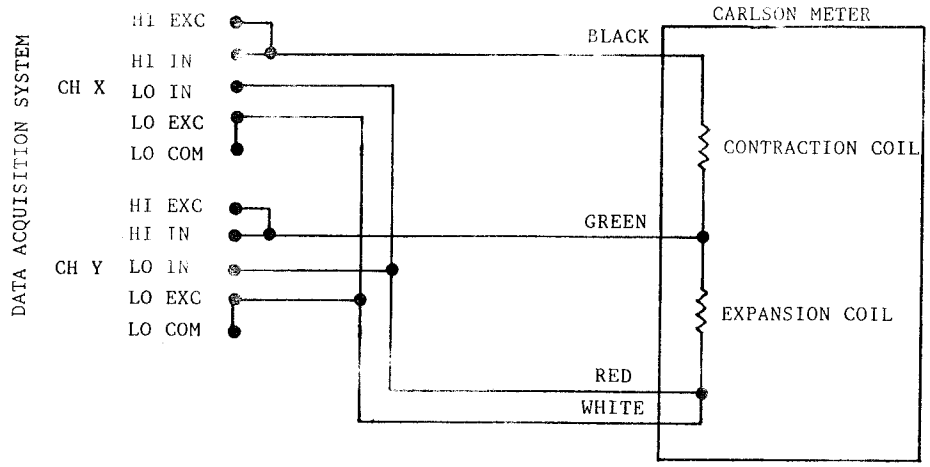

Equations: Ratio = $R_{chY}/R_{chX} - R_{chY}$

Temperature = R_{chX}

THREE WIRE CARLSON METERS

The Carlson meters that have a three-wire cable attached do not permit the measuring system to make automatic subtraction for cable resistance. The cable resistance may be balanced out in a balanced bridge configuration, however, to balance a bridge with a data acquisition system is unwieldly due to the significant amount of hardware and software involved. Therefore, the simplest and most accurate method to automate the three-wire Carlson meter measurement is a bridge configuration that is close to balance. By doing so, the measurement error is negligible for a small percentage change in the resistance of the interconnecting cable and coils of the Carlson meter.

A relay is required to switch the two coils (expansion and contraction) into the bridge, one at a time. The relay is controlled by a digital output module in the data acquisition system. The three conductors to the Carlson meter must be the same wire gage and matched in length.

Measurement Sequence:

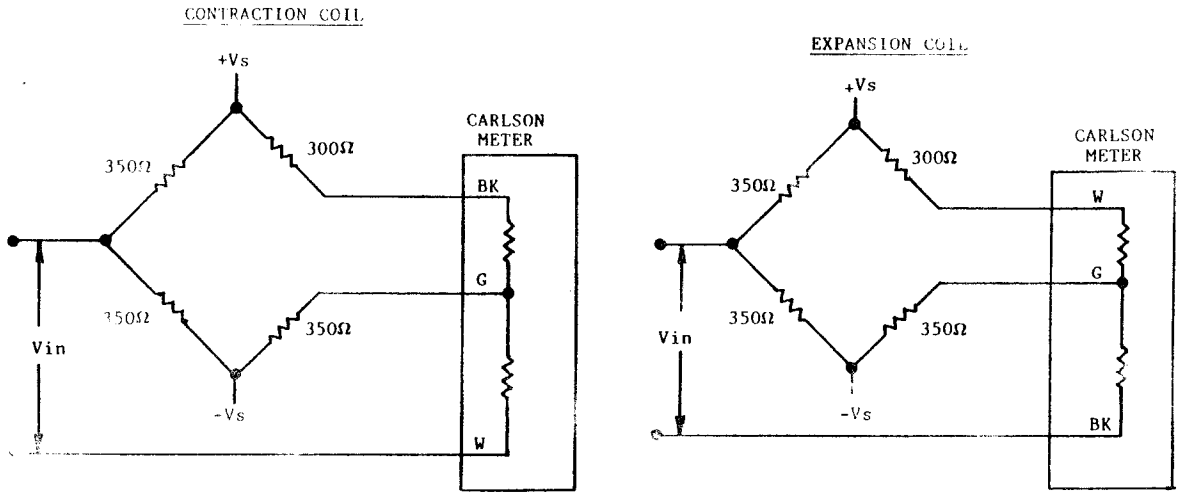

Wiring Diagram:

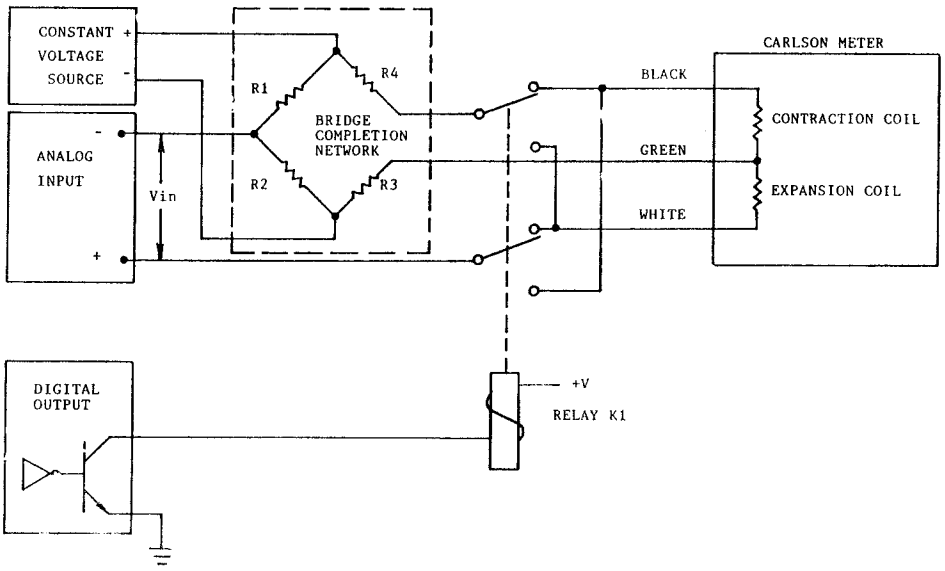

NOTES:

1. R1, R2, and R3 are 350-ohm, .01%, resistors.

2. R4 is a 300-ohm, .01% resistor. R4 is in series with the Carlson coil being measured to keep the bridge close to balance and reduce inaccuracies caused by an unbalanced bridge.

3. Relay K1 is a 2PDT-Magnecraft type W104MIP-25, or equivalent.

Program Sequence:

a. Read analog channel.

b. Compute contraction coil resistance.

$$R_{contraction} = (R3(V_s-2V_{in})/(V_s+2V_{in})) - R4$$

c. Output digital bit = "1" to energize K1.

d. Delay 0.1 second or greater for relay switching time and lines to settle.

e. Read analog channel.

f. Output digital bit = "0" to deenergize K1.

g. Compute expansion coil resistance.

$$R_{expansion} = (R3(V_s-2V_{in})/(V_s+2V_{in})) - R4$$

h. Compute ratio.

$$RATIO = R_{expansion}/R_{contraction}$$

i. Compute temperature.

$$R_{temp} = R_{expansion} + R_{contraction}$$

j. Exit.

Data Acquisition System Requirements:

a. Analog input: Range = 64 mV or greater
Resolution = 10 uV or less
High Impedance (>1 m ohm) differential

b. Digital output: Low True - Open collector or contact closure

c. Scan rate: Optional.

APPENDIX C: INSTRUMENTATION CROSS REFERENCE INDEX

Manufacturer	Type	Model	Page
Action Instruments, Inc.	Data Acquisition	OP80, OP90	IV-14-1
	Uplift	Series 505	II-16-1
Acurex Corp.	Data Acquisition	43000 & 84000	IV-14-5
	Data Loggers	Autodata 10	IV-15-1
ADPI, Inc.	Peripheral Memory	Byte Bucket	IV-4-5
	Peripheral Memory	Easi-Disk	IV-4-7
Advanced Electronic Inc.	Graphics	1280	IV-9-7
Alpha Nuclear	Peripheral Memory	610	IV-4-1
Amberg	Distance	A.MT. PROFIL 84	II-4-1
	Extensometer	A.MT.	II-5-1
AMDEK Corp.	Display Units	300G, 300A 310A	IV-7-13
Ampex Corp.	Terminals	Ampex 210	IV-7-11
Ann Arbour Terminals, Inc.	Terminals	Ambassador XL	IV-7-1
Apple Computer, Inc.	CPU	Apple IIc & Apple IIe	IV-2-2
	CPU	Macintosh	IV-2-1
Applied Digital Data Systems	Terminals	Viewpoint Viewpoint/ color	IV-7-11
ARCO Solar, Inc.	Power Units	M-Series	IV-21-1
AT & T	CPU	PC 6300	IV-2-4
	Display Units	Monitor	IV-7-13
Automated Controls, Inc.	Data Acquisition	REMAC 3100	IV-14-45
Aydin Controls	Graphics	Aycon	IV-9-8
Badger Meter, Inc.	Water Flow	Series 100	II-17-1

Manufacturer	Type	Model	Page
	Water Flow	Series 300	II-17-3
Barber-Colman Co.	Temperature	R711 Series-RTD	II-15-2
	Temperature	T61D-Thermo-couple	II-15-1
BEC Controls Corp.	Humidity	H322 Series	II-6-1
Beehive International	Terminals	ATL-004	IV-7-11
Black Box Corp.	Hardwire Transmission	S-ME 720 & S-ME 725	IV-18-1
	Adapters	S-CL410	IV-13-2
	Adapters	S-IC503 & S-IC504	IV-13-4
	Comm. Adapters	S-SW010	IV-13-1
	Comm. Adapters	232-422	IV-13-5
Burling Instr. Co.	Signal Conditioners	ED-1-T1-2B-6B-O-N	IV-17-1
	Temperature	Thermocouple, Type T	II-15-6
C. Itoh Digital Products, Inc.	Printers	1550S+NLQ, 8510S+NLQ	IV-10-1
CalComp	Data Entry	91480	IV-8-1
Campbell Scientific, Inc.	Data Loggers	CR21	IV-15-5
Canoga Data Systems	Comm. Adapters	CBE-200 Fiber optic bus ext.	IV-13-6
	Comm. Adapters	CDS-232 Modem	IV-13-7
Carlson Instruments	Crack & Joint	Carlson Joint Meters & Foundation Meters	II-3-1
	Load and Stress	Model C Series	II-9-3
	Pore Pressure, uplift	P Series	II-10-1
	Strain	Elastic wire	II-14-5
	Strain	Miniature	II-14-10

Manufacturer	Type	Model	Page
	Strain	Reinforced concrete meter	II-14-8
	Temperature	Thermometer, TF1	II-15-11
Centronics	Printers	H-136-1A/3A1, 3101-1/3	IV-10-1
CIE Terminals	Graphics	CIT-467	IV-9-1
	Printers	CI-300	IV-10-5
Citizen America Corp.	Printers	MPS-15, MPS-25	IV-10-1
Colorado Data Systems, Inc.	Data Acquisition	Series 53A & 63A	IV-14-7
Colorgraphics Communications Corp.	Graphics	MVI-100	IV-9-8
Compaq Computer Corp.	CPU	286	IV-2-6
Complexx Systems, Inc.	Statistical Multiplexers	TX3	IV-12-1
Computer Transceiver Systems, Inc.	Printers	Execuport 400	IV-10-9
	Printers	Execuport 1200	IV-10-8
Concurrent Computer Co.	(See Perkin Elmer)		
Corona Data Systems, Inc.	Printers	LP-300	IV-10-11
Crouse-Hinds	Enclosures	EJB Series	IV-20-1
Cybernex Ltd.	Graphics	SA7800	IV-9-8
Digital Equipment Corp.	Controllers	DZV11	IV-3-1
	Controllers	IBV11A	IV-3-6
	CPU	Microvax	IV-2-9
	CPU	PDP-11/23-PLUS	IV-2-11
	Disk	DEC RC 25	IV-5-1
	Graphics	VT240, VT241	IV-9-8
	Mag. Tape	DEC TSV05	IV-6-1
	Terminals	VT100 Series	IV-7-3
Diversified Group	Display Units	100, 200	IV-7-13

Manufacturer	Type	Model	Page
Doric Scientific Div.	Calibrators	474, 477	IV-22-1
Druck, Inc.	Pore Pressure	PDCR 81	II-10-3
	Water Level	PDCR 10/D	II-18-1
	Water Level	PTX 110/D, PTX 160/D	II-18-5
DSP Technology	Data Acquisition	QUANTROL	IV-14-34
DTI, Inc.	Terminals	1510 Plus, Proterm 80	IV-7-11
Eaton Corp.	Strain	CG-129, CG-159	II-14-12
Electronic Development Corp.	Calibrators	520A	IV-22-4
Epic Computer Products	Terminals	Epic 14E	IV-7-11
Epson America, Inc.	Printers	LQ-1500	IV-10-13
Falco Data Products	Terminals	Fame 2, Falco 2	IV-7-11
Fischer & Porter	Signal Conditioners	50ET4000	IV-17-1
Foxboro Co.	Signal Conditioners	E93 Series	IV-17-1
	Thermocouple, Type T	MT1316TIS	II-15-6
General Terminal Corp.	Terminals	SW10	IV-7-11
Genisco Computer Corp.	Graphics	HS-40	IV-9-8
Geokon, Inc.	Crack & Joint	4400	II-3-4
	Crack & Joint	4410	II-3-6
	Extensometer	A-1A.	II-5-2
	Inclinometer	Geokon MK3	II-7-1
	Load and Stress	4300	II-9-5
	Load and Stress	4800C	II-9-1
	Strain	VK-4100	II-14-1
	Strain	VCE-4200	II-14-3
	Water Level	4500S	II-18-3
Geonor A/S	Extensometer	P-265	II-5-5
	Load and Stress	P-100, P-105	II-9-9

Manufacturer	Type	Model	Page
	Pore Pressure	M600, 600a, 603, S-411	II-10-5
Geotechnical Engineering and Mining Services, Inc.	Data Entry	Electronic Notebook	IV-8-3
	Data Logger	PDA-840 Series	IV-15-13
	Data Loggers	Terratrac	IV-15-7
	Seepage and Leakage	PWL-47	II-11-1
	Telemetry	GOES	IV-19-2
	Telemetry	RU-1330	IV-19-1
Geotechnical Instruments	Settlement	Aquaducer	II-13-1
Gould, Inc.	Controllers	8024	IV-3-4
	Controllers	8031	IV-3-2
	Controllers	8512-2	IV-3-5
	CPU	CONCEPT 32/2705	IV-2-13
	Mag. Tape	8214, 8224, 8050	IV-6-2
	Plotter	Colorwriter 6120	IV-11-1
Harris Corp.	CPU	H700	IV-2-15
Hazeltine	Terminals	Esprit III Executive 10/102	IV-7-11
Hewlett-Packard	Analog Multiplexers	HP 3495A	IV-16-1
	Calibrators	HP 8111A	IV-22-6
	Comm. Adapters	HP 82164A	IV-13-9
	Comm. Adapters	HP 82169A	IV-13-8
	CPU	Portable	IV-2-20
	CPU	HP 1000 A600, A700, and A900	IV-2-18
	CPU	HP 150	IV-2-26
	CPU	HP-41CX and HP-41CV	IV-2-21
	CPU	HP-71B	IV-2-22
	CPU	HP-75D	IV-2-24
	CPU	HP 9000,	

Manufacturer	Type	Model	Page
		Model 226A	IV-2-28
	Data Acquisition	Data Log packages	IV-14-15
	Data Acquisition	HP 3054A	IV-14-12
	Data Acquisition	HP 3421A	IV-14-18
	Data Entry	HP 92267A, HP 82725A	IV-8-5
	Disk	HP 9114A, HP 9121S/D	IV-5-3
	Disk	HP 7941A	IV-5-5
	Graphics	HP 2623A	IV-9-3
	Hardwire Transmission	HP 39301A	IV-18-2
	Magnetic Tape	HP 7970E	IV-6-5
	Magnetic Tape	HP 82161A	IV-6-7
	Plotters	HP 7475	IV-11-3
Hoffer Flow Controls, Inc.	Signal Conditioners	ACC-7B, ACC-17B, ACC-27	IV-17-4
	Water flow	HP Series	II-17-5
Hoffman Engineering	Enclosures	A-72H3124FS rack, A-72SP30F3 panel, A-72RP24F5 relay rack	IV-20-2
HY CAL Engineering	Temperature	RTDs Ultra-7	II-15-8
IBM	CPU	IBM PC	IV-2-32
	CPU	IBM PC AT	IV-2-29
	CPU	IBM PC XT	IV-2-33
	Display Units	5100 Series	IV-7-14
	Plotter	XY/749	IV-11-5
	Plotter	7372	IV-11-3
Imperial Instruments	Signal Conditioners	TM-1613	IV-17-5
INMAC	Peripheral Memory	Porta Pac 8110	IV-4-3
Intecolor Corp.	Graphics	E8001	IV-9-8
Inteq, Inc.	Data Entry	AFP-11-T	IV-8-6

Manufacturer	Type	Model	Page
Interfels	Alignment	Electro-optical Pendulum Reading Device	II-2-1
IRAD GAGE	Pore Pressure	PWS, PWP	II-10-6
ISOREG Corp.	Power Unit	ISOGUARD	IV-21-4
	Power Unit	ISOREG	IV-21-7
John Fluke Mfg. Co., Inc.	Data Loggers	2280B	IV-15-10
JUMO Process Control, Inc.	Humidity	90.515F	II-6-2
	Signal Conditioners	90.515-F21	IV-17-6
KAYPRO Corp.	CPU	16 & 286i	IV-2-35
Keithley Inst, Inc.	Analog Multiplexer	706	IV-16-2
Kinemetrics, Inc.	Magnetic Tape	DSP-3	IV-6-8
	Seismic	DSA-1	II-12-1
Lier-Siegler, Inc.	Terminals	ADM-11	IV-7-5
Love Controls Corp.	Signal Conditioners	54-8114	IV-17-1
	Temperature	1300 Series-RTD	II-15-12
	Temperature	Thermocouple, Type T	II-15-7
Lundy Electronics & Systems, Inc.	Graphics	PC/2000	IV-9-8
Mark Products	Seismic	Short period seismometer, Model L-4C	II-12-4
MDB Systems, Inc.	Controllers	MDB-MLSI-IBV11	IV-3-7
Metrabyte	Controllers	IE-488	IV-3-8
	Data Acquisition	DASCON-1	IV-14-20
	Data Acquisition	DASH-16	IV-14-23
	Hardwire Transmission	Intelligent Modem	IV-18-4

Manufacturer	Type	Model	Page
MICOM SYSTEMS, Inc.	Statistical Multiplexers	MICRO 800/2	IV-12-3
Modular Computer Systems, Inc.	Controllers	4804	IV-3-10
	CPU	CLASSIC II/15	IV-2-37
	Disk	4185-1	IV-5-7
	Magnetic Tape	4195-11 & 4195-2	IV-6-10
Moore Industries, Inc.	Hardwire Transmission	MVT, PTT, RBT, SGT, and TCT	IV-18-6
National Instruments.	Controllers	GPIB-PC	IV-3-14
	Controllers	GPIB-600	IV-3-13
	Controllers	GPIB11V-1	IV-3-11
NEC	Printers	2000 Series	IV-10-16
Neff Instrument Corp.	Data Acquisition	System 470	IV-14-27
North Atlantic Qantex	Printers	7035, 7065	IV-10-1
Omega Engineering, Inc.	Signal Conditioners	TX-52-T1	IV-17-1
	Temperature	Thermocouple, Type T (Cu-CuNi)	II-15-6
OPTelecom	Hardwire Transmission	4121	IV-18-9
OVONIC Thermoelectric Co.	Power Units	RPG-1, RPG-2	IV-21-9
PCB Piezotronics, Inc.	Seismic	393C	II-12-3
Pentax Corp.	Alignment, Distance	Digital Theodolite with electronic distance measurer	II-2-4
Perkin-Elmer	CPU	3203	IV-2-38
	CPU	PE7350A	IV-2-40
	Disk Systems	MSM80	IV-5-9

Manufacturer	Type	Model	Page
	Magnetic Tape Terminals	M46-750 6100	IV-6-13 IV-7-8
Philips Peripherals, Inc.	Printers	GP300PC, GP300L PC	IV-10-1
Prentice Corp.	Hardwire Transmission	P-212ST Modem	IV-18-11
Princeton Graphic System	Display Units	HX-9, HX-12E, SR-12P, MAX-12	IV-7-13
Printronix	Printers	4160	IV-10-17
Quadram Corp.	Display Units	Amberchrome Quadchrome	IV-7-14
Qume Corp.	Graphics Terminals	QVT-511 QVT-101 QVT-108	IV-9-8 IV-7-12
Radio Shack	Printers	DWP-510	IV-10-19
Ramtek Corp.	Graphics	4225, 6221	IV-9-8
Raster Technologies, Inc.	Graphics	175, 180, One/10	IV-9-8
Repco, Inc.	Telemetry Transmission Devices	RDS 1200 RF Modem	IV-19-4
Rittal Corp.	Enclosures	AE 10XX, AE 11XX, AE 12XX, and AE 13XX Series	IV-20-3
	Enclosures	EL 19 XX Series	IV-20-4
	Enclosures	KL 15 XX Series	IV-20-5
	Enclosures	KS 14 XX Series	IV-20-6
Schaevitz Engineering	Hardware Transmission	CTS-420	IV-18-13

Manufacturer	Type	Model	Page
	Signal Conditioners	IEM/CAS-025I	IV-17-7
Scientific Columbus, Inc.	Signal Conditioners	7300SC Series	IV-17-9
	Signal Conditioners	7200SC Series	IV-17-1
Slope Indicator Co., Terrametrics	Extensometer	51886	II-5-6
	Inclinometer	1000	II-7-4
	Inclinometer	50430	II-7-10
	Inclinometer	50368	II-7-7
	Leveling	50322, 50344	II-8-1
	Settlement	Inclinometer, 50329	II-13-4
	Crack meter	JM, JL, JS	II-3-1
Solarex Corp.	Power Units	SX5, SX10, SX20	IV-21-12
Solartron Instruments	Data Acquisition	35951 A, B, and C, 35952A 35954A	IV-14-30
Solinst Canada, Ltd.	Extensometer	Rod Extensometer	II-5-8
	Inclinometer	MKIV	II-7-14
Spectron Engineering	Alignment	Automated Plumbline Monitoring System	II-2-7
Sprengnether Instruments, Inc.	Magnetic Tape	DP-250/260	IV-6-15
	Seismic	DR-200	II-12-6
	Seismic	Short period seismometer geophone, Model L-4C	II-12-4
		(Refer to Mark Products)	
	Signal Conditioners	AS-110	IV-17-10
	Telemetry Transmission	TC-10	IV-19-9
	Telemetry Transmission	TX-200, RX-200	IV-19-7

Manufacturer	Type	Model	Page
Star Micronics, Inc.	Printers	SD-15, SR-15	IV-10-1
Synergetics International, Inc.	Telemetry	3400 Series	IV-19-10
TAXAN Corp.	Display Units	630, 640, 121, 122, 440	IV-7-13
TECSTOR, Inc.	Disk Systems	3/322 & 3/324	IV-5-11
Tektronix, Inc.	Graphics	4105	IV-9-5
Telemac	Data Acquisition	CNF-7	IV-14-38
	Display Units	FC 3 DC readout set	IV-7-9
	Extensometer	Extensometer, Radio Frequency Telemetry, TELEMAC RADIOFOR	II-5-11
	Leveling	NIVOMATIC	II-8-3
	Load Stress	HCV/819a	II-9-10
	Pore Pressure	CL1	II-10-8
	Temperature	Model ST	II-15-14
Televideo Systems, Inc.	Printers	TP750	IV-10-19
	Terminals	910	IV-7-11
Terra Computer Systems	CPU	1010	IV-2-42
Terra Technology	Data Acquisition	PDL-201, 211, 212, 214, 215, 216, 217, and 218	IV-14-40
	Magnetic Tape	SMR-104	IV-6-17
	Pore Pressure	PE-1000	
		PE-2020	II-10-10
	Seismic	DCA 333	II-12-9
TOPAZ	Power Units	LINE 1	IV-21-14
	Power Units	Powermaker	IV-21-16
VERSATEC	Plotter	V-80	IV-11-8

Manufacturer	Type	Model	Page
Visual Technology, Inc.	Terminals	Visual 60	IV-7-11
Weather Measure	Telemetry	Model 1760	IV-19-15
Walter Nold Co.	Settlement	Seismitron	II-13-6
Westward Technology, Inc.	Graphics	3219W	IV-9-8
Wild Heerbrugg	Alignment, Distance	T2000	II-2-11
Wyse Technology	Terminals	WY-50, WY-30	IV-7-11
Yellow Springs Inst.	Temperature	700 Series	II-15-4
Zenith Data Systems	Terminals	ZT-1, Z-29A	IV-7-11