TA/
W342.R5
v.12
no.1
c.3

US-CE-C Property of the
United States Government

US Army Corps
LIBRARY iment
USE ONLY

The REMR Bulletin

News from the Repair, Evaluation, Maintenance, and Rehabilitation Research Program

Volume 12, Number 1 January 1995

Core-Loc™: A major development in concrete armor

by
George F. Turk and Jeffrey A. Melby
U.S. Army Engineer Waterways Experiment Station

The U.S. Army Corps of Engineers has built and currently maintains 19 major concrete-armored breakwaters within the United States. Many of these have been surveyed to assess both the hydraulic and structural performance of the concrete armoring (Melby and Turk 1994). Maintenance of most of these structures has been in excess of original estimates, and there has been much speculation as to the causes of premature armor failure. The Corps has used several types of armor units for building and repairing these structures, including the tetrapod, tribar, and dolos. None of these has had exceptional performance. Now a new armor unit, Core-Loc™ (Figure 1), promises to be superior to those used in the past.

Overview

The Coastal Engineering Research Center (CERC), Waterways Experiment Station (WES),

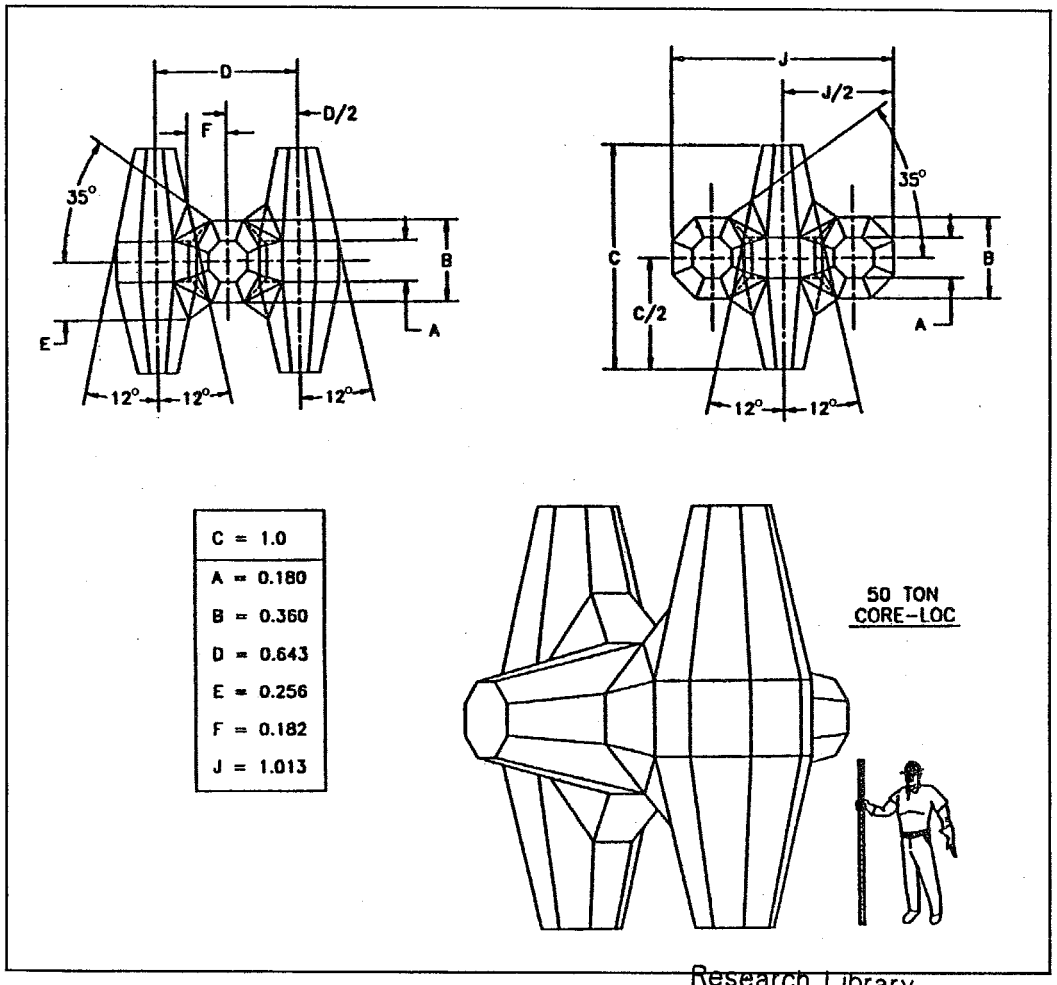

Figure 1. Core-Loc schematic drawing

Research Library
US Army Engineer Waterways
Experiment Station
Vicksburg, Mississippi

has an ongoing research effort to investigate the hydraulic and structural response of concrete armor and to develop design guidance. This research stems from the engineering need to protect navigation structures in high wave-energy environments, such as on the U.S. west coast and the Hawaiian Islands. Because of the very difficult construction, in-service conditions, and repair needs associated with these environments, the basic development program has focused on randomly placed armor units.

One of the goals of this effort has been to develop optimal concrete armor unit shapes that can be used for both new construction and repair of existing rubble structures. This development requires incorporation of all of the best engineering features from the various existing armor shapes into a single unit while eliminating the major weaknesses. Optimal armor engineering should have the following characteristics:

- High hydraulic stability when placed in a single-unit-thickness layer at any slope angle.
- Reserve stability for wave conditions that exceed the design event.
- No tendency for units to rock on slope.
- Continued stability even when broken or following renesting resulting from local instability.
- Efficient combination of porosity and slope roughness to dissipate the maximum wave energy.
- Maximum performance with a minimum concrete armor layer volume.
- Hydraulic stability when placed as a repair with other shapes.
- Low internal stresses so that no steel reinforcement is required.
- Ease of casting.
- Ease of construction of armor layer even in low visibility water.
- Use of minimal casting yard or barge space.
- Use of conventional construction materials and techniques.

Existing unit shapes such as the dolos and tribar have slender central sections and long legs, producing very high stresses in the central sections of the units. This results in units which break into pieces having much less mass than the original unit. The broken units have little stability and may contribute to the breaking of adjacent units.

Tetrapods exhibit even lower stability than dolosse. Their legs extend a shorter distance from the centroid so interlocking is less, and their rounded sections promote rocking on slopes and, when destabilized, rolling. In response to the shortcomings of these existing shapes, CERC developed Core-Loc.

Core-Loc

This new series of concrete armor units incorporates all the aforementioned optimal features of an armor unit (Melby and Turk 1993; 1995a,b,c). The Core-Loc units have been designed to be placed in a single unit-thickness layer. The Core-Loc shape has been optimized to provide maximum hydraulic stability, unreinforced strength, and reserve stability. The primary intent of this shape optimization is to have a very stable armor layer, with good wave energy dissipation characteristics, and yet have stresses low enough that normal-strength, unreinforced concrete can be used with little or no armor breakage occurring during the life of the structure.

In addition to being used for new construction, the Core-Loc was designed to interlock well with dolosse for use as a repair unit. When Core-Locs are placed on a slope with dolosse, the two units tend to have an affinity for each other. The separation and taper of the Core-Loc's outer members are designed for superior interlocking with dolosse. Figure 2 illustrates an armor matrix composed of both Core-Locs and dolosse. The two units are almost indistinguishable from each other.

Hydraulic testing

Over the past 1-1/2 years, a large number of Core-Loc hydraulic stability tests have been conducted under a variety of situations. Figure 3 shows a Core-Loc slope under wave attack in an early test series. The research on Core-Loc stability is still ongoing (Carver and Wright 1994). The tests completed to date show that the Core-Loc armor layer is two-dimensionally stable for wave heights far exceeding those causing damage to most other armor shapes. During the testing, researchers noted that the units showed very little movement on the slope, including in-place rocking. No-damage Hudson stability coefficients have exceeded 150 in several instances, and for many tests, the wave generation capacity of the flume was reached before damage to the armor layer occurred.

A conservative armor-layer design would never specify armor using very high stability coefficients. Regardless of the armor type, designs should not vary drastically from the noninterlocked armor stability because of the many uncertainties involved with breakwater design which add to the risk of failure. Therefore, these tests indicate that, when designed conservatively for

USACEWES
3 5925 00274 4440

two-dimensional situations (such as for use on a revetment), the Core-Loc armor will have considerable reserve stability beyond the design wave or repeated subjection to the design wave. We recommend that $K_D = 16$ be used for trunk sections and $K_D = 13$ be used for head sections, for both breaking and nonbreaking waves, where K_D = the Hudson stability coefficient. Also, the reflection coefficients from the slope were almost indistinguishable from those of dolosse, indicating that existing dolos reflection and runup design information could be used for preliminary estimation of reflection and runup on Core-Loc slopes. As always, physical model tests should be used to validate this preliminary design guidance.

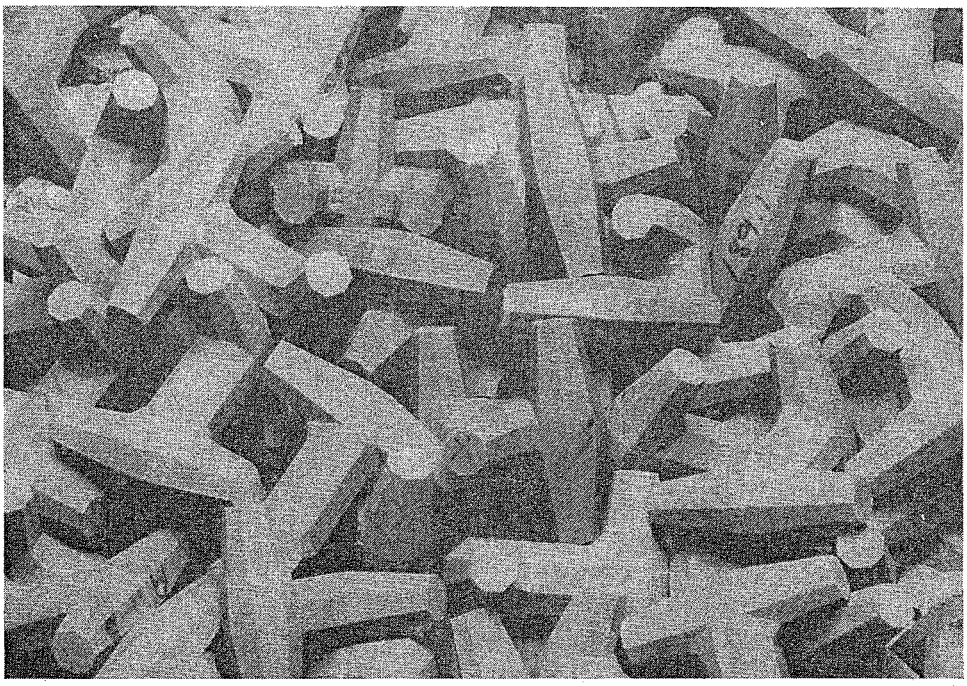

Figure 2. Core-Loc and dolos armor matrix

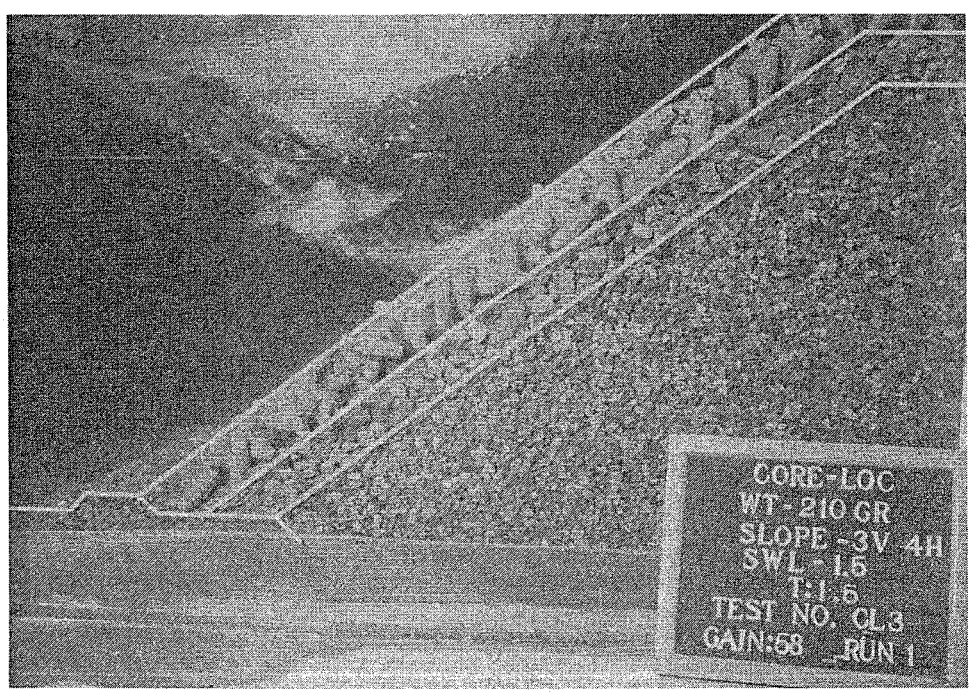

Figure 3. Core-Loc under wave attack during early testing

Structural analyses

Structural analyses have been conducted using Finite Element Methods (FEM) to compare the structural response of dolosse, tribars, and Accropodes® with Core-Locs for several static-loading modes (Figure 4). While the four units have diverse shapes, the weights of each was set at an arbitrary 10 tons. Similar loads and boundary condition constraints were applied to each. In general, the units were loaded in flexure, torsion, and a combination of these. Table 1 summarizes the FEM results in terms of maximum tensile stress. The Core-Loc stresses are lower than those of the other armor units. The significance of the stress reductions calculated by the FEM can be realized by examining an actual design case.

For the Crescent City, CA, 42-ton dolosse, the design tensile stress level corresponding to a 2-percent exceedance was approximately 696 psi. This structure is performing reasonably well with 2-percent breakage since the 1986 rehabilitation. The strict concrete specification for Crescent City produced a high-strength, expensive concrete with a 28-day splitting tensile strength of 725 psi. For the same size Core-Locs, the maximum design stress could be reduced to 62 percent of this value, which is approximately 430 psi. This stress is below the 28-day splitting tensile strength met on most Corps concrete armor projects. Lower strength requirements of Core-Loc would result in significant cost savings for the concrete needed for larger armor units.

Armor volume efficiency

The cost of an armor layer depends primarily on the volume of concrete on the slope, number of units, unit material cost, and unit construction costs. The unit construction costs include casting yard, transport, and placement costs. Yard costs include construction of formwork; concrete placement, storage, and handling; and cost of equipment necessary to handle the units. But the total armor material volume dominates the armor layer cost and therefore should be minimized by maximizing the porosity and minimizing the armor layer thickness.

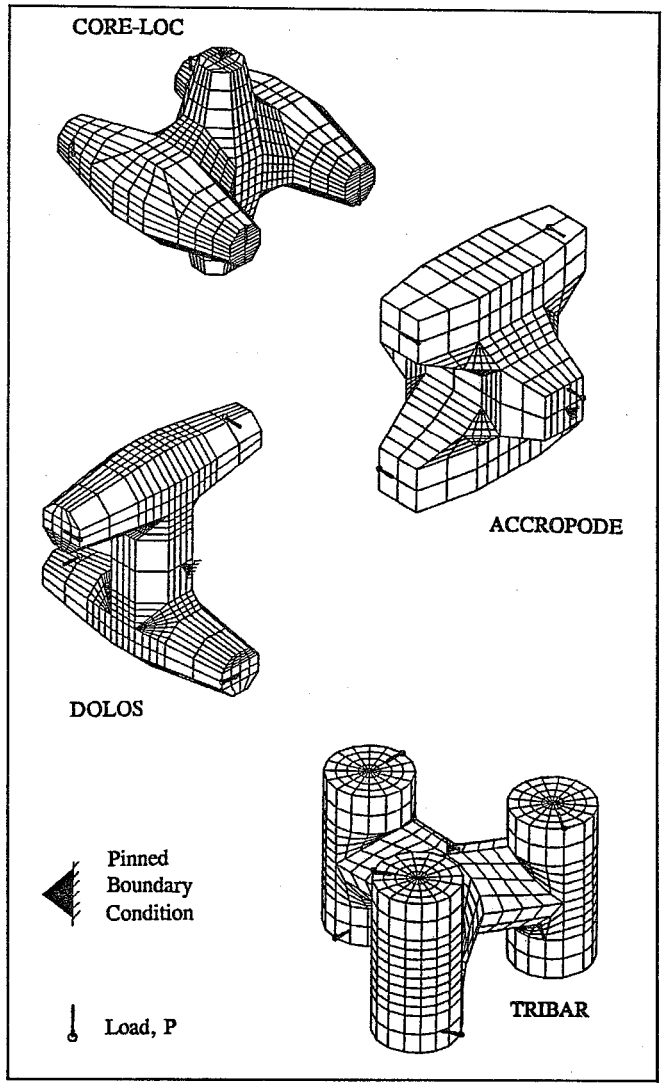

Figure 4. FEM grids for Core-Loc, Accropode, dolos, and tribar

Because of Core-Loc's high stability, high porosity, and single-unit-thickness layer, building an armor layer from Core-Locs requires less concrete than other commonly used armor units. When designing for breaking waves on a 1V:1.5H trunk section, Accropodes require 51 percent more

Table 1. FEM Static Stress Comparison

Load Case	Tensile Stress, psi (Mpa)			
	Core-Loc	Dolos	Accropode	Tribar
Torsion	162 (1.12)	302 (2.08)	220 (1.52)	432 (2.98)
Flexure - fluke tip load	162 (1.12)	349 (2.41)	220 (2.52)	487 (3.36)
Flexure - fluke center load	305 (2.10)	496 (3.42)	NA[1]	NA
Combined flexure and torsion	277 (1.91)	555 (3.83)	NA	NA

[1]NA = not applicable.

concrete than Core-Locs; dolosse, 53 percent more; randomly placed tribars, 110 percent more; and tetrapods, 159 percent more (Melby and Turk 1994). Similar savings can be achieved with the use of Core-Locs when designing for head sections and other slope configurations.

Future plans

With the cost saving associated with the Core-Loc, several projects are planned using this new armor unit. Site-specific model studies have been conducted on the Noyo, CA, offshore breakwater (Smith et al. 1994) and the Kodiak, AK, breakwater. The Kaumalapau breakwater in Hawaii is currently being tested. Basic research of the Core-Loc continues both in two- and three-dimensional testing. Consideration is being given to using Core-Locs on the Ouzinkie, AK, breakwater; Maalaea, HI, breakwater; Grays Harbor, WA, jetty; and Manasquan, NJ, jetties. Large-scale testing of the Core-Loc at the Oregon State University large wave flume is planned this year, and a Cooperative Research and Development Agreement is being negotiated to conduct prototype drop tests of both 1.5- and 20-ton Core-Locs.

In addition, the U.S. patent is pending, and foreign patents in most industrialized countries are being filed. Licensing of these patents will be advertised in the Federal Register early this year.

For more information about the technical aspects of Core-Loc, please contact George Turk at (601) 634-2332 or Jeffrey Melby at (601) 634-2062. For information about licensing the Core-Loc, contact Phillip Stewart at (601) 634-4113.

References

Carver, R.D., and Wright, B.J. (1994). "Stability of Core-Loc Armored, Rubble-Mound Breakwater Trunks," Progress Report, U.S. Army Engineer Waterways Experiment Station, Vicksburg, MS.

Melby, J.A., and Turk, G.F. (1993). "Core-Loc Concrete Armor Units Initial Stability Results," Internal Report, Coastal Engineering Research Center, U.S. Army Engineer Waterways Experiment Station, Vicksburg, MS.

_____. (1994). "Concrete Armor Unit Performance in Light of Recent Research Results," in publication, *ASCE / WPCO Sem. on Case Histories of Design, Constr., and Maint. of Rubble Mound Struc.*, American Society of Civil Engineers.

_____. (1995a). "Core-Loc Concrete Armor Units," Technical Report in publication, U.S. Army Engineer Waterways Experiment Station, Vicksburg, MS.

_____. (1995c). "The Core-Loc: Optimized Concrete Armor," in publication, *Proc. 24th Int. Conf. on Coast. Engr.*, American Society of Civil Engineers, New York.

_____. (1995c). "Core-Loc: Optimized Concrete Armor Units," in publication, *PIANC Bulletin.*

Smith, E.R., Cole, J., Bonigut, T., and Hennington, L. (1994). "Stability Tests of Proposed Breakwater at Noyo, California," in publication, *ASCE / WPCO Sem. on Case Histories of Design, Constr., and Maint. of Rubble Mound Struc.*, American Society of Civil Engineers.

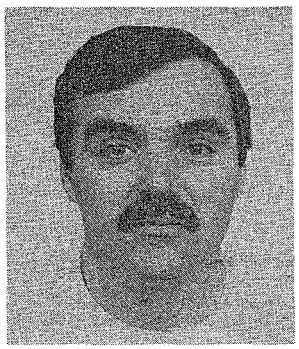

George F. Turk is a research hydraulic engineer in the Wave Research Branch, Wave Dynamics Division, CERC, WES. He has a B.S. degree in civil engineering from Brigham Young University and an M.S. degree in civil engineering from Oregon State University. He joined CERC in 1992 and is a co-Principal Investigator for the REMR armor unit work unit. Turk is a registered Professional Engineer in the States of Oregon and Mississippi.

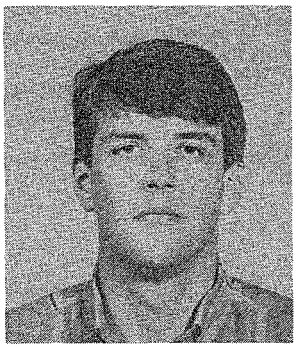

Jeffrey A. Melby is a research hydraulic engineer in the Wave Research Branch, Wave Dynamics Division, CERC, WES. He holds B.S. and M.S. degrees in civil engineering from Oregon State University and is currently a Ph.D. student at the University of Delaware. Since joining CERC in 1987, he has worked on a variety of coastal structure design projects and is a co-Principal Investigator for the REMR armor unit work unit. Melby is also Principal Investigator on two additional coastal work units.

Restoration of west facade of U.S. Capitol: case study[1]

by
Edward F. O'Neil
U.S. Army Engineer Waterways Experiment Station

On 27 April 1983, 100 sq ft of sandstone veneer fell from the colonnade on the west front of the U.S. Capitol and landed in the courtyard below. For some time, the area had been under surveillance. In fact, for the past two decades, huge timber trusses had been necessary to brace the structure in this area and prevent it from collapsing (Figure 1). Further inspection of the west face of the building revealed that much of the stone suffered from the same deterioration as the colonnade. The soft, crumbling surfaces not only threatened the integrity of the edifice but also presented a potential safety hazard. Seemingly, the Washington, D.C., climate with its recurrent cycles of freezing and thawing and seasonal rainfalls had taken its toll.

Fortunately, 2 days prior to this collapse, the House Appropriations Committee had approved a $70.5-million bill to buttress the deteriorating walls. This proved to be a timely action. The ensuing repairs demonstrate how modern technology can be used to rehabilitate old structures without compromising their historic appearance.

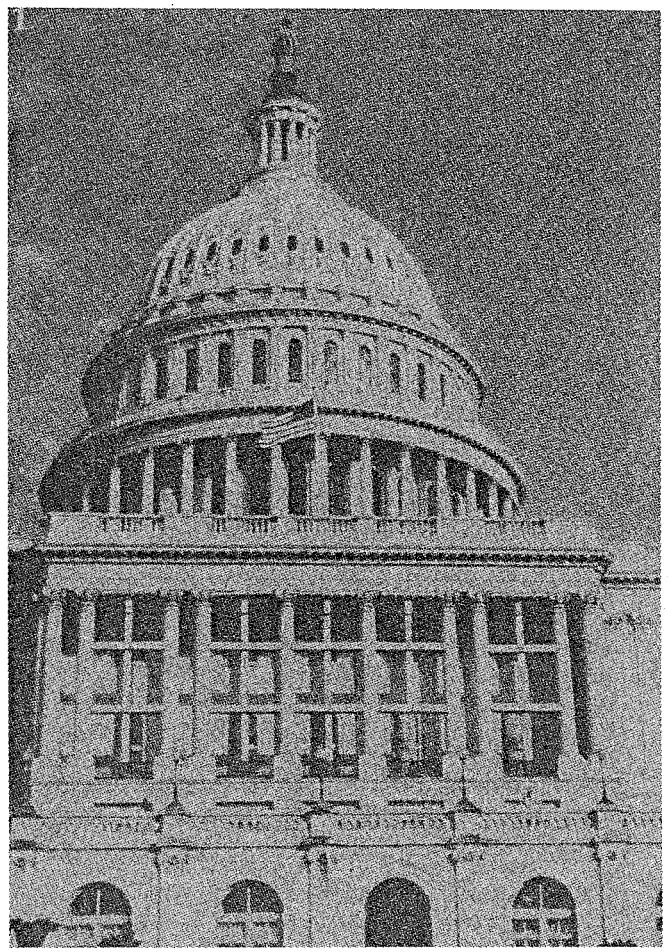

Figure 1. West facade colonnade, with supporting timbers (courtesy of ProSoCo, Inc., Kansas City, KS)

Assessment of deterioration

In order to assess the extent of the deterioration, the Architect of the Capitol (AOC) and consulting engineers decided that the stone should be stripped of its numerous coatings of paint to reveal the full damage. This process required the removal of an accumulation of 35 coats of paint before the sandstone was bared. For nearly 150 years, the Capitol had been painted every 4 years. The old paint on the sandstone had not been removed before each new coat was applied. Some of these coatings were more than 1/8 in. thick, so the layer of hardened paint that had to be removed was quite thick. In addition, numerous types of paint had been applied over the course of time, from linseed oil paint closest to the stone to acrylic or synthetic-resin-based paints in the outermost layers.

The problem was compounded by the fact that the stone used in this portion of the Capitol was an inferior grade of sandstone from a quarry on Aquia Creek in Stafford County, VA. According to Benjamin H. Latrobe, the AOC during Thomas

1 Adapted from "Repair and Maintenance of Masonry Structures: Case Histories," by Edward F. O'Neil, Technical Report REMR-CS-46, in press, U.S. Army Engineer Waterways Experiment Station, Vicksburg, MS.

Jefferson's first term, the stone had begun to deteriorate almost immediately (Clifton 1987). Latrobe wrote that it cracked and would fall to pieces on exposure to air and sun, expanding when wet and contracting when dried. It was not until 1818 that these walls were first painted. After paint removal in 1993, the consultants determined that most of the disintegration occurred before this initial painting and that the paint actually slowed the exposure of the stone to moisture. The damage was due to moisture that found its way to the surface of the sandstone and froze either before paint was first applied or periodically in the 165 years since.

Prior to the 1983-1984 paint removal, tests were conducted to determine the appropriate chemicals to use for this process without further damaging the delicate sandstone beneath (Figure 2). An inconspicuous, lower part of a courtyard wall was selected for the testing. The chemicals were limited to turpentine-based solvents, chloride-based paint removers, and alkaline-based paint removers. Other products that would soften the paint were avoided because they would also destroy the matrix of the sandstone.

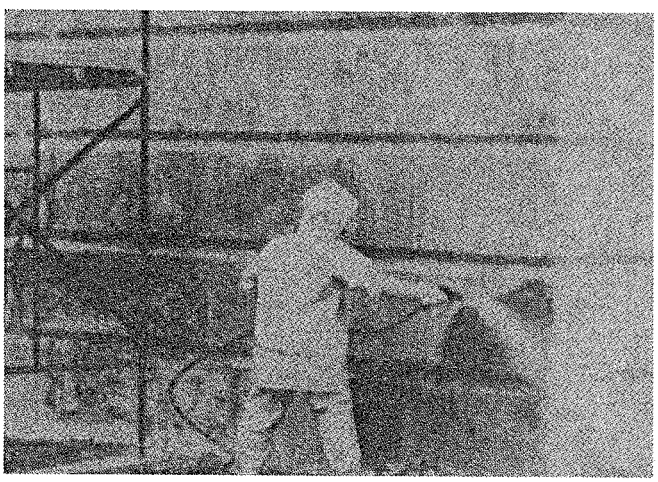

Figure 2. Field test of chemicals on courtyard wall (courtesy of ProSoCo, Inc., Kansas City, KS)

Paint removal

A two-step process was selected for removing the paint and cleaning the stone surface without damaging the material beneath. First, a heavy-duty, alkaline-based paint stripper was applied to soften and remove the paint. This stripper contained potassium hydroxide and had a pH of 14. Wood and metal surfaces in the area were protected with polyethylene sheeting during this procedure.

Two applications of the stripper were required to remove the 35 coats of paint on the sandstone. An airless spray system that had been refitted with caustic-resistant seals was used for each application. The pressure setting on the spray system was set high enough so that the stripper would not clog in the delivery nozzle, yet low enough so that it would not atomize when expelled from the nozzle. The first application was applied in a heavy coat that was built up to a thickness of 1/8 in. This coat was allowed to dwell on the paint surface for 24 hr. The formulation of the stripper was such that it would continue to have a softening effect on the layers of paint for that period of time. The second application was made without cleaning the debris of the first pass and was allowed to remain on the surface for an additional 24 hr. Then, both coatings were removed. Pressure-rinsing equipment removed the dissolved paint and chemical residue from the walls. A moderate water pressure was used to remove the materials from the masonry surface to prevent driving unwanted chemical cleaners into the pores of the sandstone.

The second step of the operation was to neutralize the surface of the sandstone and thus stop further action of any alkalies that may have been left on the stone. The product used contained acetic acid, which was the weakest of the appropriate chemicals and would do the least damage to the fragile sandstone. The acetic acid concentrate was diluted with water and applied to the sandstone with an airless spray system. A very low pressure was used to avoid driving the acid into the pores of the sandstone since removal would have been very difficult. After 3 to 5 min, the acid solution was washed off with water under pressure. This water rinse was applied from the bottom of the treated area to the top, making sure each portion of the surface was covered by the clean water. This procedure was used to ensure that any acid washed from an area would be further diluted when it ran through the wetted surfaces below. The entire surface was kept wet during this operation to prevent any streaking of materials being washed from the surface.

This process removed the bulk of the paint from the sandstone. There were areas that needed further attention such as the small areas between the ornamentation on column capitals (Figure 3) and window decorations and in the joints between the blocks of sandstone. In some cases, the paint buildup in these areas had obliterated the decorative details. These areas were spot treated with the alkali stripper before the paint removal portion of the process was completed.

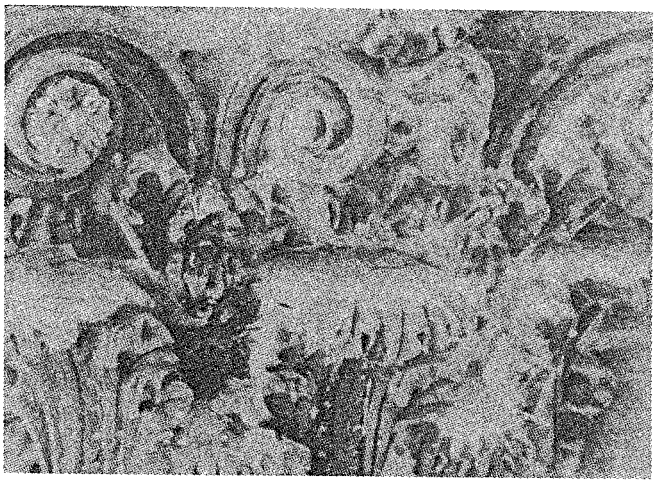

Figure 3. Ornamental detail requiring extra cleaning (courtesy of ProSoCo, Inc., Kansas City, KS)

Paint removal of the area was completed by February 1984, and the condition of the sandstone underneath could be clearly seen. An extensive survey of the surface was conducted (Clifton 1987), revealing cracks and areas of deterioration. Disintegration of the stone was generally confined to the top 1/2 in. of the surface, although there were places where the damage was deeper. These areas were generally less than 1 in. deep and were generally in locations where carved stone was employed.

During the inspection of the surfaces, the sandstone was classified into material that had deteriorated beyond the point of reclamation and material that could be saved and preserved. From the early inspection reports, the recommendation was to replace up to 40 percent of the facade.

National Bureau of Standards tests

The former National Bureau of Standards (NBS, now the National Institute of Standards and Technology) conducted extensive testing on the stone to help develop technical criteria that would aid in deciding whether or not to treat the stone (Clifton 1987). NBS conducted water absorption, water vapor transmission, sodium sulfate, consolidation ability, depth of penetration, and accelerated combined deterioration tests. Specimens taken from stones after the paint had been removed were tested with five different candidate strengthening materials. These included four silanes (S1, S2, S3, S4) and one acrylic coating (A). The manufacturers of each of the materials were asked to treat the specimens with their product in order to most nearly reproduce the techniques that would be used with each product in the field. Only in certain circumstances did the NBS personnel actually apply the material to the samples. All tests conducted on the specimens were done in accordance with an applicable American Society for Testing and Materials Standard, if one existed.

As a result of the exhaustive testing done by the NBS, the AOC and consulting firm determined that the sandstone blocks designated for restoration were in need of strengthening and that they should be protected with a breathable coating to prevent further ingress of water. The strengthener chosen was a silicic ethyl ester that would form natural binders in place.

Masonry-related repairs

Efforts to repair and replace stone went on concurrently. Masons replaced the badly deteriorated sandstone with limestone while restoration crews worked to repair and preserve stone that was considered good enough to save. Because of the proven limitations of the Aquia Creek sandstone and the architect's intentions to paint the facade after the restoration was complete, Indiana limestone was used as the replacement. This material was more durable than the sandstone, and since it was going to be painted after the repair, the color and material characteristics did not need to match.

The stone that could be repaired was treated with a stone strengthener and a breathable water-repellent coating. The strengthener replaced natural binding materials within the stone that had been lost to weathering, and the water-repellent coating prevented water from penetrating into the stone while at the same time allowing water vapor to move out through the coating.

Strengthening the stone

The strengthener in this case contained a silicic ethyl ester, which has an extremely small molecular size coupled with a viscosity less than that of water. These two attributes allowed the material to penetrate deeply into the pores of the sandstone.

The task of strengthening the stone began in earnest in February 1987. For proper penetration to be achieved, the material was applied in cycles over small sections of the building (Figure 4). Each cycle consisted of three saturating passes of the material applied bottom to top over a section of the building that was approximately 72 ft long and 7 ft high. This was the largest possible area that could be treated with ease for full penetration before the strengthener began to catalyze. In

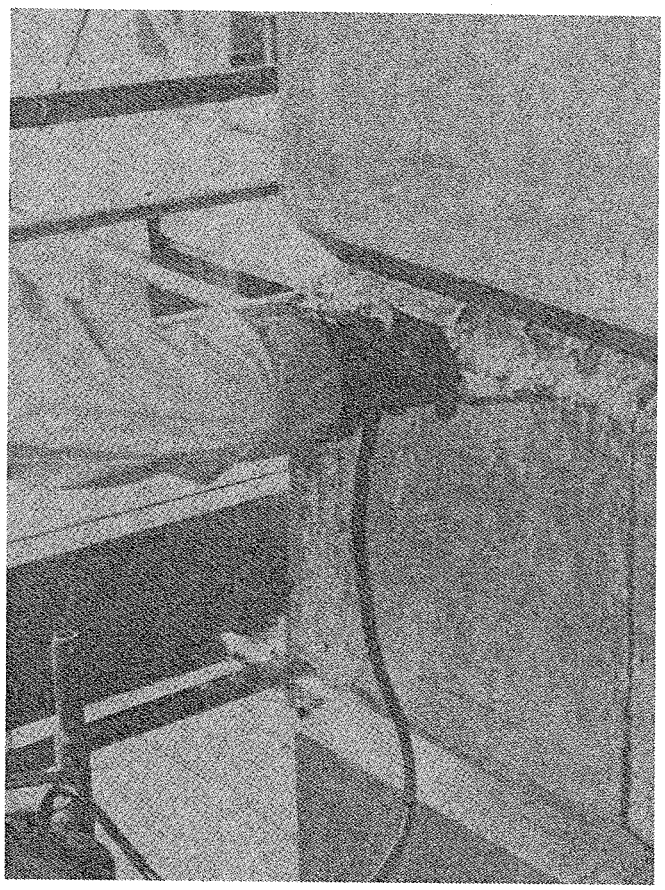

Figure 4. Application of stone strengthener to sandstone (courtesy of ProSoCo, Inc., Kansas City, KS)

each pass, the material was sprayed onto the stone and allowed to penetrate for 10 to 15 min before the next pass in the cycle was made. Airless spray equipment was used in order to provide a controlled, low-pressure spray of the material over the surfaces. A 45-min waiting period was allowed between each cycle to ensure full penetration. The cycles were repeated until excess material remained visible on the surface at the end of the waiting period. Five cycles of treatment were applied to the sandstone. The replacement limestone took three cycles before the stone was properly saturated.

Since the strengthening process started in winter, the recommended surface temperature between 40 ºF to 85 ºF was not always obtained. Both ambient and stone temperature had to be monitored constantly. To ensure complete moisture removal from the stone and proper surface temperature for application, radiant heaters were used near the stone surface at night (Figure 5). The scaffolding in the area of the work was enclosed with sheets of polyethylene, and the heaters were turned on at the end of the work day. Surface thermometers were installed on the stone and checked each day to be sure that the temperature of the stone was above the minimum 40 ºF. The heaters were then disconnected, and the polyethylene was removed as the day's work began.

Small diameter cores were taken from the sandstone and limestone to determine the depth of penetration of the strengthener. The penetration was better than expected, between 1-1/2 and 4 in. on the sandstone and 1 to 1-1/2 in. on the limestone, due in part to the nightly heating of the walls. As a result of the very successful penetration, the amount of stonework scheduled for replacement was reduced from 40 to 25 percent.

After the stone strengthening was completed, a breathable masonry coating that repelled water but allowed water vapor to pass through was applied. The product used was a water-based coating suitable for exterior masonry surfaces, and it could be pigmented to match a number of color applications. Generically, it was a silicone emulsion with a silicone-resin binder that when dry exhibited a high degree of water-vapor permeability due to many small (0.005-in.) pores in the dried coating. These pores allowed the water vapor to exit the stone and penetrate through the coating. The pores were so small that they would not allow water into the stone.

Seventeen test panels were coated with pigmented versions of the coating to determine the coverage of the material over strengthened sandstone and limestone and to exactly match the color of the marble in the adjoining House and Senate wings. The panels were evaluated in morning and afternoon direct sun, and shade, as well as on cloudy and clear days, and a formulation for the best color match was chosen.

Before the coating began, the stone was cleaned to ensure that no loose material was left on the surface. The coating material was applied by airless spray because of all the detail in the carvings of the stone. Since the coating was to be sprayed on, it was diluted with up to 15-percent fresh water to thin it for even application through the spray nozzle.

The first coating was applied in a thickness of approximately 15 mils. This is a wet thickness and due to the 60 percent by mass of solvent and vehicle will reduce to approximately 6 mils when dry. To ensure full coverage of the surface and a satisfactory application of the coating, it was back-rolled once before being allowed to dry. The first coat was allowed to dry for 24 hr before a second coat was applied using the same techniques described in the first application. This coat was also allowed to dry for 24 hr before the coating was considered cured.

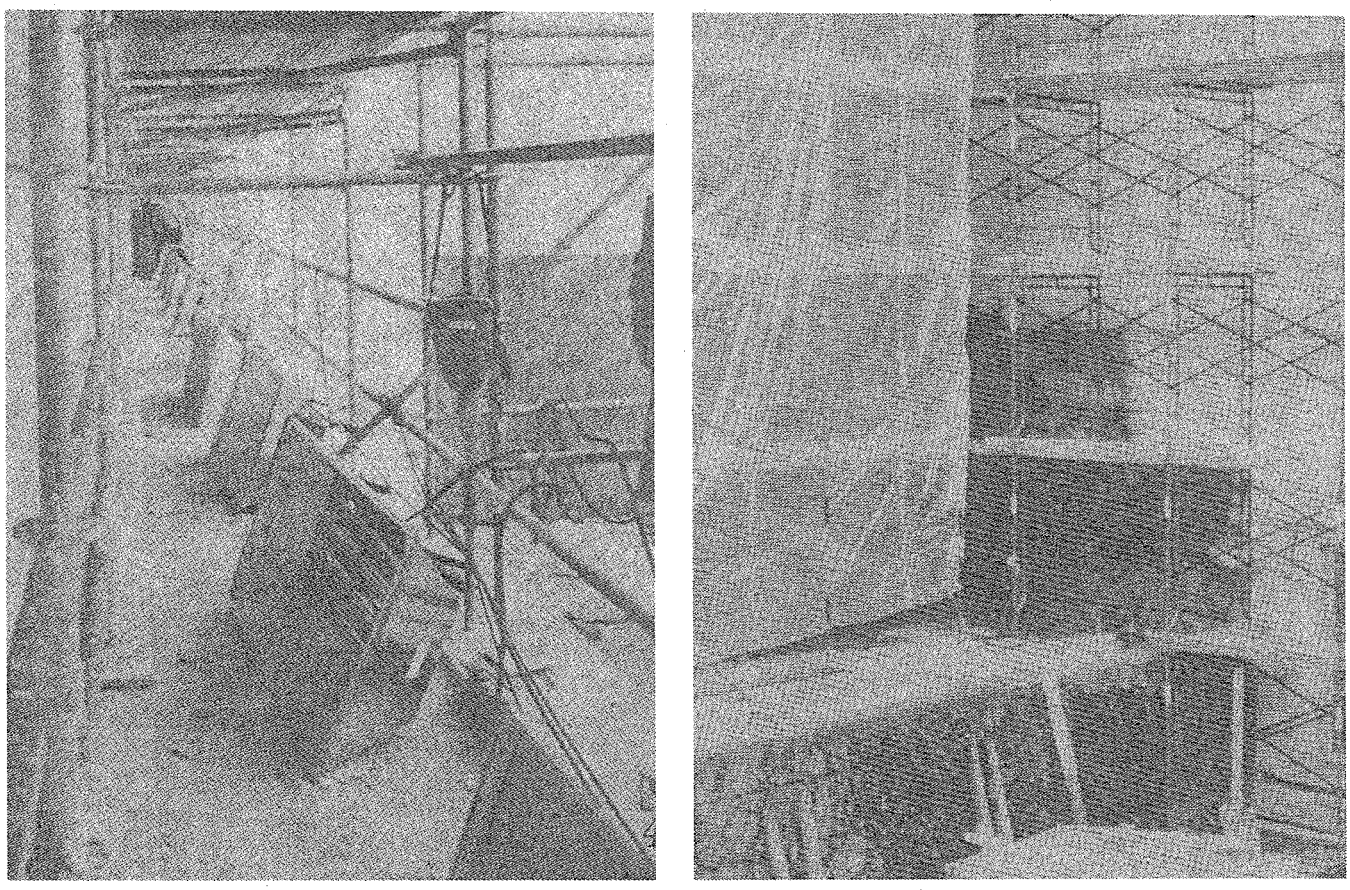

Figure 5. Enclosed scaffolding and heaters (courtesy of ProSoCo, Inc., Kansas City, KS)

Performance to date

At the time of this writing, all restorations to the west facade of the Capitol have performed well. The sandstone that was repaired shows no signs of further disintegration, and there has been no deterioration of the paint placed over the stone to complete the restoration.

For additional information, contact Ed O'Neil at (601) 634-3387.

References

Allen, W.C. (1990). "The United States Capitol: A Brief Architectural History," U.S. Government Printing Office, Washington, DC.

Boyer, D.W. (1986). "Field and Laboratory Testing Program to Determine the Suitability of Deteriorated Masonries for Chemical Consolidation," ProSoCo, inc., Kansas City, KS.

Clifton, J.R. (1987). "Preliminary Performance Criteria for Stone Treatments for the United States Capitol," NBSIR 87-3542, National Bureau of Standards, Washington, DC.

O'Neil, E.F. "Repair and Maintenance of Masonry Structures: Case Histories," Technical Report REMR-CS-46 (in press), U.S. Army Engineer Waterways Experiment Station, Vicksburg, MS.

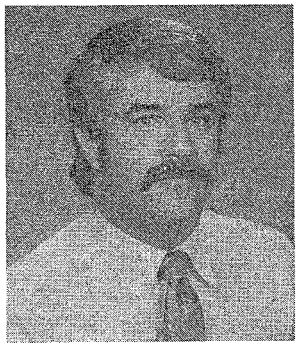

Ed O'Neil is a research civil engineer in the Engineering Mechanics Branch, Concrete Technology Division, Structures Laboratory, WES. He holds a B.S. degree in civil engineering from Northeastern University and an M.S. degree in civil engineering from Purdue University. He has been involved in structural research for the Department of the Air Force, the Huntsville Division under the National MAGLEV Initiative, and other WES divisions and laboratories. He is the WES point of contact for the management of the WES Field Exposure Station at Treat Island, Eastport, ME. O'Neil is a member of the American Concrete Institute, Society of American Military Engineers, and the Posttensioning Institute.

New REMR publications now available

The following REMR technical reports have been published and may be obtained by writing Director, U.S. Army Engineer Waterways Experiment Station, ATTN: CEWES-SC-A/Lee Byrne, 3909 Halls Ferry Road, Vicksburg, MS 39180-6199, or by calling Lee Byrne at (601) 634-2587 (e-mail address byrnee@ex1.wes.army.mil.).

Stockstill, R.L., and Berger, R.C. (1994). "HIVEL2D: A Two-Dimensional Flow Model for High-Velocity Channels, Technical Report REMR-HY-12, U.S. Army Engineer Waterways Experiment Station, Vicksburg, MS.

A numerical flow model, HIVEL2D, has been developed as a tool to evaluate high-velocity channels. HIVEL2D is a depth-averaged, two-dimensional flow model designed specifically for flow fields that contain supercritical and subcritical regimes as well as the transitions between the regimes. The model is a finite element description of the numerical flow model and illustrative examples of typical high-velocity flow fields that the model is capable of simulating. Model verification is obtained by comparison of simulation results with data obtained from flume studies. Model assumptions and limitations are also discussed.

Smith, L., and Beitelman, A. (1994). "Methods for Removal of Lead Paint from Steel Structures," Technical Report REMR-EM-08, U.S. Army Construction Engineering Research Laboratories, Champaign, IL.

Because of the environmental problems leaded paint can create, regulations have been enacted to help protect the environment and the safety and health of workers. However, these regulations have had a significant impact on the cost of painting, on painting with leaded paints, and on the removal of these paints. New methods have been developed to deal with the removal of leaded paints, and the costs of these methods vary, sometimes considerably, with the structure involved and the removal method used. Many field personnel are not familiar with the issues involved with leaded paint removal, the options available, and costs.

This report was prepared to provide information about the current regulations for the removal of leaded paints, new methods of paint removal, and the costs associated with these new methods. Coating removal methods discussed include dry abrasive blasting, water jetting, water blasting with abrasive injection, power tool cleaning, and chemical stripping. Maintenance painting methods discussed include spot surface painting, hand or power tool cleaning, vacuum blasting, water blasting, and chemical stripping. This report focuses on leaded paint on steel structures; removal of leaded paint from other substrates may or may not be done by the methods described herein.

Guidelines for *REMR Bulletin* articles

In keeping with the technology transfer goals of the REMR Research Program, readers are invited to submit articles for publication in *The REMR Bulletin*. Articles may be submitted by individuals outside the Corps of Engineers and will be considered for publication as long as they are relevant to repair, evaluation, maintenance, or rehabilitation activities.

Even though technical in content, articles should be written in an easy-to-understand style, since the bulletin's readership is diverse. References should be kept to a minimum. Copyrighted materials must be identified as such and should be accompanied by permission to print.

Articles should be approximately 1,500 to 2,500 words long. The text should not exceed 10 double-spaced pages of material, if possible. Figures (line drawings, plots, graphs, etc.), tables, and photos should be included.

All published articles will carry the author's byline, with a brief biographical sketch and photograph.

For more information, please contact the REMR Technology Transfer Specialist by writing to Director, U.S. Army Engineer Waterways Experiment Station, ATTN: CEWES-SC-A/Lee Byrne, 3909 Halls Ferry Road, Vicksburg, MS 39180-6199 (e-mail address byrnee@ex1.wes.army.mil.) or by calling (601) 634-2587.

Featured in This Issue

Core-Loc™: A major development in concrete armor 1

Restoration of west facade of U.S. Capitol: case study 6

New REMR publications now available . . . 11

Guidelines for *REMR Bulletin* articles . . . 11

The REMR Bulletin is published in accordance with AR 25-30 as one of the information exchange functions of the Corps of Engineers. It is primarily intended to be a forum whereby information on repair, evaluation, maintenance, and rehabilitation work done or managed by Corps field offices can be rapidly and widely disseminated to other Corps offices, other US Government agencies, and the engineering community in general. Contribution of articles, news, reviews, notices, and other pertinent types of information are solicited from all sources and will be considered for publication so long as they are relevant to REMR activities. Special consideration will be given to reports of Corps field experience in repair and maintenance of civil works projects. In considering the application of technology described herein, the reader should note that the purpose of *The REMR Bulletin* is information exchange and not the promulgation of Corps policy; thus guidance on recommended practice in any given area should be sought through appropriate channels or in other documents. The contents of this bulletin are not to be used for advertising, or promotional purposes, nor are they to be published without proper credits. Any copyright material released to and used in *The REMR Bulletin* retains its copyright protection, and cannot be reproduced without permission of copyright holder. Citation of trade names does not constitute an official endorsement or approval of the use of such commercial products. *The REMR Bulletin* will be issued on an irregular basis as dictated by the quantity and importance of information available for dissemination. Communications are welcomed and should be made by writing US Army Engineer Waterways Experiment Station, ATTN: Lee Byrne (CEWES-SC-A), 3909 Halls Ferry Road, Vicksburg, MS 39180-6199, or calling 601-634-2587.

ROBERT W. WHALIN, PhD, PE
Director

PRINTED ON RECYCLED PAPER

DEPARTMENT OF THE ARMY
WATERWAYS EXPERIMENT STATION, CORPS OF ENGINEERS
3909 HALLS FERRY ROAD
VICKSBURG, MISSISSIPPI 39180-6199

OFFICIAL BUSINESS
CEWES-SC-A

BULK RATE
U.S. POSTAGE PAID
Vicksburg, MS
Permit No. 85